WASTEWATER SYSTEM EXPANSION

FOR THE

CITY OF FRANKFORT, INDIANA

CONTRACT A - WASTEWATER TREATMENT PLANT

VOLUME I

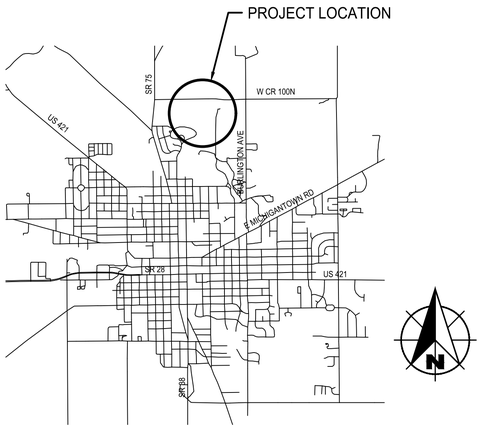

FRANKFORT
VICINITY MAP
SCALE: NONE

STATE LOCATION MAP
SCALE: NONE

WESSLER ENGINEERING

More than a Project™

INDIANAPOLIS
6219 South East Street
Indianapolis, Indiana 46227
Phone: (317) 788-4551 - Fax: (317) 788-4553
www.wesslerengineering.com

PROJECT NO. 193216-04-001

CITY COUNCIL

JUDITH SHEETS	MAYOR
MEGAN SHEETS	MEMBER
MICHAEL BRITE	MEMBER
STEVE BEARDSLEY	MEMBER
JOE PALMER	MEMBER
ERIC WOODS	MEMBER
BRANDT FULLER	MEMBER
CLARENCE WARTHAN	MEMBER

UTILITIES SERVICE BOARD

MIKE KELLEY	PRESIDENT
KENT BREWER	VICE PRESIDENT
RICK GUNYON	MEMBER
MIKE REEDER	MEMBER
JOE ROOT	MEMBER

WASTEWATER SUPERINTENDENT

MIKE BECK

ROBERT W. HOLDEN II REGISTERED No. 10000096 STATE OF INDIANA PROFESSIONAL ENGINEER 03/04/2020	ROBERT W. HOLDEN II PROJECT MANAGER REGISTERED ENGINEER STATE OF INDIANA NO. 10000096
JEFFREY ROSS BALLARD REGISTERED No. 60860191 STATE OF INDIANA PROFESSIONAL ENGINEER 03/04/2020	JEFFREY ROSS BALLARD PROJECT MANAGER REGISTERED ENGINEER STATE OF INDIANA NO. 60860191 STRUCTURAL
WAYNE C. MOORE REGISTERED No. 10707476 STATE OF INDIANA PROFESSIONAL ENGINEER 03/04/2020	WAYNE C. MOORE PROJECT MANAGER REGISTERED ENGINEER STATE OF INDIANA NO. 10707476 ELECTRICAL
DANIEL THOMAS MILES REGISTERED No. PE10302029 STATE OF INDIANA PROFESSIONAL ENGINEER 03/04/2020	DANIEL THOMAS MILES PROJECT MANAGER REGISTERED ENGINEER STATE OF INDIANA NO. 10302029 MECHANICAL - HVAC

MARCH 2020

"For Vewing Purposes Only" Visit wesslerengineering.com to purchase

Drawing: J:\Frankfort\Projects\193216 Frankfort WWTP Exp\CAD 04-001\DWG\Sheets\Area 1 - Gen\1G-GS.dwg | Layout: COVER SHEET | Plotted: 03/05/20 @ 11:07:46 | LastSavedBy: Jonathan L

DRAWING INDEX

FRANKFORT WASTEWATER TREATMENT FACILITY IMPROVEMENTS PROJECT

SHEET TYPE DEFINITIONS:

G - GENERAL
D - DEMOLITION
A - ARCHITECTURAL
C - CIVIL/PROCESS
S - STRUCTURAL
M - HEATING, VENTILATION AND AIR CONDITIONING
P - PLUMBING
E - ELECTRICAL
I - INSTRUMENTATION AND CONTROL
Y - SITE

SHEET NUMBER	AREA	SHEET TYPE	NUMBER	SHEET DESIGNATION	
GENERAL INFORMATION (AREA 1)					
1	1	G	1.0	1G1	COVER SHEET - VOLUME 1
2	1	G	2.0	1G2	DRAWING INDEX - VOLUME 1
3	1	G	3.0	1G3	DRAWING INDEX - VOLUME 2
4	1	G	4.0	1G4	LOCATION AND SCOPE OF WORK PLAN
5	1	G	5.0	1G5	PLAN NOTES, UTILITIES, ABBREVIATIONS AND LEGEND
6	1	G	6.0	1G6	PROCESS FLOW DIAGRAM
7	1	G	7.0	1G7	SLUDGE FLOW DIAGRAM
8	1	G	8.0	1G8	HYDRAULIC PROFILE
9	1	G	9.0	1G9	DESIGN SUMMARY
10	1	S	1.0	1S1	STRUCTURAL GENERAL NOTES
11	1	M	1.0	1M1	MECHANICAL SYMBOLS AND ABBREVIATIONS
12	1	E	1.0	1E1	ELECTRICAL SYMBOLS AND ABBREVIATIONS
13	1	I	1.0	1I1	PID LEGEND
SITE WORK (AREA 2)					
14	2	Y	1.0	2Y1	EXISTING OVERALL SITE PLAN
15	2	Y	2.0	2Y2	EXISTING PARTIAL SITE PLAN - NW
16	2	Y	3.0	2Y3	EXISTING PARTIAL SITE PLAN - NE
17	2	Y	4.0	2Y4	EXISTING PARTIAL SITE PLAN - SW
18	2	Y	5.0	2Y5	EXISTING PARTIAL SITE PLAN - SE
19	2	Y	6.0	2Y6	NEW OVERALL SITE PLAN
20	2	Y	7.0	2Y7	NEW PARTIAL SITE PLAN - NW
21	2	Y	8.0	2Y8	NEW PARTIAL SITE PLAN - NE
22	2	Y	9.0	2Y9	NEW PARTIAL SITE PLAN - SW
23	2	Y	10.0	2Y10	NEW PARTIAL SITE PLAN - SE
24	2	Y	11.0	2Y11	NEW GRADING PLAN
25	2	Y	12.0	2Y12	PLANT DRAIN PLAN AND PROFILE
26	2	E	1.0	2E1	OVERALL ELECTRICAL SITE PLAN
27	2	E	2.0	2E2	ENLARGED ELECTRICAL SITE PLAN - NORTH
28	2	E	3.0	2E3	ENLARGED ELECTRICAL SITE PLAN - SOUTH
EXISTING HEADWORKS STRUCTURE - MODIFICATIONS (AREA 3)					
29	3	D	1.0	3D1	EXISTING HEADWORKS STRUCTURE - DEMOLITION PLANS
30	3	D	2.0	3D2	EXISTING HEADWORKS STRUCTURE - DEMOLITION SECTION
31	3	C	1.0	3C1	EXISTING HEADWORKS STRUCTURE - MODIFICATIONS PLAN
32	3	C	2.0	3C2	EXISTING HEADWORKS STRUCTURE - MODIFICATIONS SECTIONS
33	3	E	1.0	3E1	EXISTING HEADWORKS STRUCTURE - ELECTRICAL PLAN
34	3	E	2.0	3E2	EXISTING HEADWORKS STRUCTURE - MOTOR LEVEL POWER PLAN
EXISTING FLOW EQUALIZATION LAGOONS AND LAGOON CONTROL BUILDING (AREA 4)					
35	4	D	1.0	4D1	EXISTING FLOW EQUALIZATION LAGOONS CONTROL BLDG - DEMOLITION PLANS & SECTIONS
36	4	C	1.0	4C1	FLOW EQUALIZATION LAGOONS - MODIFICATION PLAN
37	4	C	2.0	4C2	LAGOON CONTROL BUILDING - MODIFICATION PLANS
38	4	C	3.0	4C3	LAGOON CONTROL BUILDING - MODIFICATION SECTIONS
39	4	S	1.0	4S1	FLOW EQUALIZATION LAGOONS - STRUCTURAL REPAIR PLAN
40	4	M	1.0	4M1	LAGOON CONTROL BUILDING - UPPER LEVEL MECHANICAL DEMOLITION PLAN
41	4	M	2.0	4M2	LAGOON CONTROL BUILDING - ROOF MECHANICAL DEMOLITION PLAN
42	4	M	3.0	4M3	LAGOON CONTROL BUILDING - UPPER LEVEL MECHANICAL PLAN
43	4	M	4.0	4M4	LAGOON CONTROL BUILDING - ROOF MECHANICAL PLAN
44	4	M	5.0	4M5	LAGOON CONTROL BUILDING - MECHANICAL DETAILS AND SCHEDULES
45	4	E	1.0	4E1	LAGOON CONTROL BUILDING - ELECTRICAL PLAN
NEW CONTROLLED RATE PUMP STATION (AREA 5)					
46	5	C	1.0	5C1	NEW CONTROLLED RATE PUMP STATION - PLANS
47	5	C	2.0	5C2	NEW CONTROLLED RTATE PUMP STATION - SECTION AND DETAIL
48	5	E	1.0	5E1	NEW CONTROLLED RATE PUMP STATION - ELECTRICAL PLANS
NEW ANAEROBIC BASIN (AREA 6)					
49	6	G	1.0	6G1	NEW ANAEROBIC BASIN - PERSPECTIVE VIEWS
50	6	C	1.0	6C1	NEW ANAEROBIC BASIN - LOWER LEVEL PLAN
51	6	C	2.0	6C2	NEW ANAEROBIC BASIN - UPPER LEVEL PLAN
52	6	C	3.0	6C3	NEW ANAEROBIC BASIN - SECTIONS
53	6	C	4.0	6C4	NEW ANAEROBIC BASIN - SECTIONS
54	6	S	1.0	6S1	NEW ANAEROBIC BASIN - FOUNDATION PLAN AND SECTION
55	6	S	2.0	6S2	NEW ANAEROBIC BASIN - STRUCTURAL UPPER LEVEL PLAN AND SECTIONS
56	6	E	1.0	6E1	NEW ANAEROBIC BASIN - POWER PLAN
EXISTING AERATION BASINS AND CLARIFIERS CONVERTED TO BNR COMPLEX AND WAS HOLDING TANKS (AREA 7)					
57	7	D	1.0	7D1	EXISTING SETTLING/AERATION COMPLEX OVERALL LOWER LEVEL DEMOLITION PLAN
58	7	D	2.0	7D2	EXISTING SETTLING/AERATION COMPLEX OVERALL UPPER LEVEL DEMOLITION PLAN
59	7	D	3.0	7D3	MISCELLANEOUS - DEMOLITION PLANS AND SECTIONS
60	7	D	4.0	7D4	EXISTING AERATION BUILDING - DEMOLITION PLANS
61	7	D	5.0	7D5	EXISTING AERATION BUILDING - DEMOLITION SECTIONS
62	7	D	6.0	7D6	MISCELLANEOUS DEMOLITION PLANS AND SECTIONS
63	7	C	1.0	7C1	BNR COMPLEX - OVERALL LOWER LEVEL MODIFICATIONS PLAN
64	7	C	2.0	7C2	BNR COMPLEX - OVERALL UPPER LEVEL MODIFICATIONS PLAN
65	7	C	3.0	7C3	BNR COMPLEX - PLANS AND SECTIONS
66	7	C	4.0	7C4	TYPICAL ANOXIC BASIN - PLANS, SECTION AND DETAIL
67	7	C	5.0	7C5	TYPICAL WAS HOLDING BASIN - LOWER LEVEL MODIFICATION PLAN
68	7	C	6.0	7C6	AERATION BASIN MODIFICATIONS - SECTIONS
69	7	C	7.0	7C7	TYPICAL DIGESTED SLUDGE HOLDING BASIN - MODIFICATION PLAN
70	7	C	8.0	7C8	AERATION BUILDING - MODIFICATION PLAN
71	7	C	9.0	7C9	AERATION BUILDING - MODIFICATION SECTIONS
72	7	C	10.0	7C10	AERATION BUILDING - ENLARGED PIPING PLAN
73	7	C	11.0	7C11	NEW RECYCLE PUMP STATION - PERSPECTIVE VIEW
74	7	C	12.0	7C12	NEW RECYCLE PUMP STATION - PLANS
75	7	C	13.0	7C13	NEW RECYCLE PUMP STATION - SECTION
76	7	C	14.0	7C14	NEW RECYCLE PUMP STATION - SECTIONS
77	7	S	1.0	7S1	BNR COMPLEX - STRUCTURAL DETAILS
78	7	S	2.0	7S2	NEW INFLUENT SPLITTER BOX - STRUCTURAL
79	7	S	3.0	7S3	NEW RECYCLE PUMP STATION - PLANS AND SECTIONS
80	7	E	1.0	7E1	BNR COMPLEX - OVERALL ELECTRICAL PLAN
81	7	E	2.0	7E2	AERATION BUILDING - ELECTRICAL PLAN
82	7	E	3.0	7E3	PRIMARY SLUDGE PUMP ROOM - ELECTRICAL PLAN
83	7	E	4.0	7E4	NEW RECYCLE PUMP STATION - POWER PLAN
NEW SECONDARY CLARIFIERS (AREA 8)					
84	8	G	1.0	8G1	NEW SECONDARY CLARIFIER COMPLEX - PERSPECTIVE VIEW
85	8	C	1.0	8C1	NEW SECONDARY CLARIFIER COMPLEX - OVERALL PLAN VIEW
86	8	C	2.0	8C2	NEW SECONDARY CLARIFIER SPLITTER BOX - LOWER AND UPPER PLANS
87	8	C	3.0	8C3	NEW SECONDARY CLARIFIER SPLITTER BOX - SECTIONS
88	8	C	4.0	8C4	NEW SECONDARY CLARIFIERS NO. 1 AND 2 - LOWER PLANS
89	8	C	5.0	8C5	NEW SECONDARY CLARIFIERS NO. 1 AND 2 - UPPER PLANS
90	8	C	6.0	8C6	NEW SECONDARY CLARIFIERS NO. 1 AND 2 - TYPICAL CROSS SECTION AND DETAILS
91	8	S	1.0	8S1	NEW SECONDARY CLARIFIER SPLITTER BOX - STRUCTURAL PLANS AND SECTION
92	8	S	2.0	8S2	NEW SECONDARY CLARIFIERS NO. 1 AND 2 - STRUCTURAL PLANS
93	8	S	3.0	8S3	NEW SECONDARY CLARIFIERS NO. 1 AND 2 - STRUCTURAL SECTIONS AND DETAILS
94	8	E	1.0	8E1	NEW SECONDARY CLARIFIER COMPLEX - OVERALL POWER PLAN
95	8	E	2.0	8E2	NEW SECONDARY CLARIFIERS NO. 1 AND 2 - POWER PLANS
NEW SECONDARY CONTROL BUILDING (AREA 9)					
96	9	G	1.0	9G1	NEW SECONDARY CONTROL BUILDING - PERSPECTIVE VIEW
97	9	A	1.0	9A1	NEW SECONDARY CONTROL BUILDING - PLANS AND SECTION
98	9	A	2.0	9A2	NEW SECONDARY CONTROL BUILDING - ELEVATIONS
99	9	C	1.0	9C1	NEW SECONDARY CONTROL BUILDING - LOWER LEVEL PLAN
100	9	C	2.0	9C2	NEW SECONDARY CONTROL BUILDING - UPPER LEVEL PLAN
101	9	C	3.0	9C3	NEW SECONDARY CONTROL BUILDING - SECTION
102	9	C	4.0	9C4	NEW SECONDARY CONTROL BUILDING - SECTIONS
103	9	S	1.0	9S1	NEW SECONDARY CONTROL BUILDING - PLANS
104	9	S	2.0	9S2	NEW SECONDARY CONTROL BUILDING - ROOF PLAN
105	9	S	3.0	9S3	NEW SECONDARY CONTROL BUILDING - SECTIONS
106	9	M	1.0	9M1	SECONDARY CONTROL BUILDING - MECHANICAL PLANS
107	9	M	2.0	9M2	SECONDARY CONTROL BUILDING - MECHANICAL DETAILS AND SCHEDULES
108	9	E	1.0	9E1	NEW SECONDARY CONTROL BUILDING - LOWER LEVEL POWER PLAN
109	9	E	2.0	9E2	NEW SECONDARY CONTROL BUILDING - UPPER LEVEL POWER PLAN
110	9	E	3.0	9E3	NEW SECONDARY CONTROL BUILDING - LIGHTING PLANS
EXISTING FILTER BUILDING (AREA 10)					
111	10	D	1.0	10D1	EXISTING TERTIARY FILTER - LOWER LEVEL DEMOLITION PLAN
112	10	D	2.0	10D2	EXISTING TERTIARY FILTER - MIDDLE LEVEL DEMOLITION PLAN
113	10	D	3.0	10D3	EXISTING TERTIARY FILTER - UPPER LEVEL DEMOLITION PLAN
114	10	D	4.0	10D4	EXISTING TERTIARY FILTER - DEMOLITION SECTIONS
115	10	D	5.0	10D5	EXISTING TERTIARY FILTER - DEMOLITION SECTIONS
116	10	C	1.0	10C1	EXISTING TERTIARY FILTER - LOWER LEVEL MODIFICATION PLAN
117	10	C	2.0	10C2	EXISTING TERTIARY FILTER - MIDDLE LEVEL MODIFICATION PLAN
118	10	C	3.0	10C3	EXISTING TERTIARY FILTER - UPPER LEVEL MODIFICATION PLAN
119	10	C	4.0	10C4	EXISTING TERTIARY FILTER - TOP LEVEL MODIFICATION PLAN
120	10	C	5.0	10C5	EXISTING TERTIARY FILTER - MODIFICATION SECTIONS
121	10	C	6.0	10C6	EXISTING TERTIARY FILTER - MODIFICATION SECTIONS
122	10	C	7.0	10C7	EXISTING TERTIARY FILTER - MODIFICATION SECTIONS
123	10	E	1.0	10E1	EXISTING FILTER BUILDING - POWER PLAN
124	10	E	2.0	10E2	EXISTING FILTER BUILDING - POWER PLAN

"For Viewing Purposes Only - Visit wesslerengineering.com to purchase"

SCALE VERIFICATION
BAR IS ONE INCH LONG ON ORIGINAL DRAWING

DRAWN BY: MLN
CHECKED BY: RLT
APPROVED BY: RWH
ISSUE DATE: MARCH 2020
PROJECT NUMBER: 193216-04-001

NO.	DATE	INITIALS	REVISION DESCRIPTIONS

ROBERT W. HOLDEN JR. REGISTERED No. 10000096 STATE OF INDIANA PROFESSIONAL ENGINEER 03/04/2020

WESSLER ENGINEERING
More than a Project™

WASTEWATER SYSTEM EXPANSION
CITY OF FRANKFORT, INDIANA
CONTRACT A - WASTEWATER TREATMENT PLANT

DRAWING INDEX VOLUME 1

SHEET NO. **1G2**
PAGE NO. 2

Drawing: J:\Frankfort\Projects\193216 Frankfort WWTP Exp\CAD 04-001\DWG\Sheets\Area 1 - Gen\1G-GS.dwg | Layout: DRAWING INDEX VOLUME 1-1G2 | Plotted: 03/05/20 @ 12:32:05 | LastSavedBy: MikeN

DRAWING INDEX

FRANKFORT WASTEWATER TREATMENT FACILITY IMPROVEMENTS PROJECT

SHEET TYPE DEFINITIONS:

G - GENERAL
D - DEMOLITION
A - ARCHITECTURAL
C - CIVIL/PROCESS
S - STRUCTURAL
M - HEATING, VENTILATION AND AIR CONDITIONING
P - PLUMBING
E - ELECTRICAL
I - INSTRUMENTATION AND CONTROL
Y - SITE

SHEET NUMBER	AREA	SHEET TYPE	NUMBER	SHEET DESIGNATION	
VOLUME 2					
125	1	G	1.1	1G1.1	COVER SHEET - VOLUME 2
126	1	G	3.0	1G3	DRAWING INDEX - VOLUME 2
EXISTING CHLORINE CONTACT TANK (AREA 11)					
127	11	C	1.0	11C1	EXISTING CHLORINE CONTACT TANK MODIFICATION - PLAN
128	11	C	2.0	11C2	EXISTING CHLORINE CONTACT TANK MODIFICATION - SECTIONS
129	11	E	1.0	11E1	EXISTING CHLORINE CONTACT TANK - POWER PLANS
EXISTING ANAEROBIC DIGESTERS MODIFICATIONS (AREA 12)					
130	12	D	1.0	12D1	EXISTING ANAEROBIC DIGESTERS - OPERATIONS LEVEL DEMOLITION PLAN
131	12	D	2.0	12D2	EXISTING ANAEROBIC DIGESTERS - DEMOLITION SECTIONS
132	12	D	3.0	12D3	EXISTING SLUDGE PROCESS BUILDING - DEMOLITON PLANS
133	12	C	1.0	12C1	EXISTING ANAEROBIC DIGESTERS - OPERATIONS LEVEL MODIFICATION PLAN
134	12	C	2.0	12C2	EXISTING ANAEROBIC DIGESTERS - MODIFICATIONS TOP PLAN
135	12	C	3.0	12C3	EXISTING ANAEROBIC DIGESTERS - MODIFICATIONS SECTIONS
136	12	C	4.0	12C4	EXISTING SLUDGE PROCESS BUILDING - MODIFICATIONS PLANS
137	12	C	5.0	12C5	EXISTING SLUDGE PROCESS BUILDING - MODIFICATIONS SECTIONS
138	12	C	6.0	12C6	SLUDGE PROCESS PIPING AND NPW SCHEMATIC
139	12	C	7.0	12C7	GAS PIPING SCHEMATIC
140	12	S	1.0	12S1	SLUDGE PROCESS BUILDING - STRUCTURAL
141	12	E	1.0	12E1	EXISTING ANAEROBIC DIGESTERS MODIFICATIONS - ELECTRICAL PLAN
142	12	E	2.0	12E2	EXISTING ANAEROBIC DIGESTERS MODIFICATIONS - POWER PLAN
143	12	E	3.0	12E3	EXISTING SLUDGE PROCESS BUILDING - POWER PLAN
NEW THICKENING AND DEWATERING BUILDING (AREA 13)					
144	13	G	1.0	13G1	NEW THICKENING AND DEWATERING BUILDING - PERSPECTIVE VIEWS
145	13	A	1.0	13A1	NEW THICKENING AND DEWATERING BUILDING - LOWER LEVEL PLAN
146	13	A	2.0	13A2	NEW THICKENING AND DEWATERING BUILDING - UPPER LEVEL PLAN
147	13	A	3.0	13A3	NEW THICKENING AND DEWATERING BUILDING - ROOF PLAN
148	13	A	4.0	13A4	NEW THICKENING AND DEWATERING BUILDING - ELEVATIONS
149	13	C	1.0	13C1	NEW THICKENING AND DEWATERING BUILDING - LOWER LEVEL PLAN
150	13	C	2.0	13C2	NEW THICKENING AND DEWATERING BUILDING - UPPER LEVEL PLAN
151	13	C	3.0	13C3	NEW THICKENING AND DEWATERING BUILDING - SECTION
152	13	C	4.0	13C4	NEW THICKENING AND DEWATERING BUILDING - SECTION
153	13	C	5.0	13C5	NEW THICKENING AND DEWATERING BUILDING - SECTION
154	13	C	6.0	13C6	NEW THICKENING AND DEWATERING BUILDING - SECTION AND DETAILS
155	13	S	1.0	13S1	NEW THICKENING AND DEWATERING BUILDING - FOUNDATION PLAN
156	13	S	2.0	13S2	NEW THICKENING AND DEWATERING BUILDING - FRAMING PLAN
157	13	S	3.0	13S3	NEW THICKENING AND DEWATERING BUILDING - ROOF FRAMING PLAN
158	13	S	4.0	13S4	NEW THICKENING AND DEWATERING BUILDING - STRUCTURAL SECTIONS
159	13	S	5.0	13S5	NEW THICKENING AND DEWATERING BUILDING - STRUCTURAL SECTIONS
160	13	S	6.0	13S6	NEW THICKENING AND DEWATERING BUILDING - STRUCTURAL ELEVATIONS
161	13	M	1.0	13M1	NEW THICKENING AND DEWATERING BUILDING - MECHANICAL PLANS
162	13	M	2.0	13M2	NEW THICKENING AND DEWATERING BUILDING - MECHANICAL PLANS
163	13	M	3.0	13M3	NEW THICKENING AND DEWATERING BUILDING - MECHANICAL DETAILS AND SCHEDULES
164	13	P	1.0	13P1	NEW THICKENING AND DEWATERING BUILDING - PLUMBING PLAN
165	13	P	2.0	13P2	NEW THICKENING AND DEWATERING BUILDING - PLUMBING ISOMETRIC AND DETAILS
166	13	E	1.0	13E1	NEW THICKENING AND DEWATERING BUILDING - LOWER LEVEL POWER PLAN
167	13	E	2.0	13E2	NEW THICKENING AND DEWATERING BUILDING - UPPER LEVEL POWER PLAN
168	13	E	3.0	13E3	NEW THICKENING AND DEWATERING BUILDING - ROOF LEVEL POWER PLAN
169	13	E	4.0	13E4	NEW THICKENING AND DEWATERING BUILDING - LOWER LEVEL LIGHTING PLAN
170	13	E	5.0	13E5	NEW THICKENING AND DEWATERING BUILDING - UPPER LEVEL LIGHTING PLAN
NEW LONG TERM BIOSOLIDS STORAGE BUILDING (AREA 14)					
171	14	G	1.0	14G1	NEW LONG TERM BIOSOLIDS STORAGE BUILDING - PERSPECTIVE VIEW
172	14	C	1.0	14C1	NEW LONG TERM BIOSOLIDS STORAGE BUILDING - OVERALL PLAN AND NPW SCHEMATIC
173	14	C	2.0	14C2	NEW LONG TERM BIOSOLIDS STORAGE BUILDING - PARTIAL PLAN NORTH
174	14	C	3.0	14C3	NEW LONG TERM BIOSOLIDS STORAGE BUILDING - PARTIAL PLAN SOUTH
175	14	C	4.0	14C4	NEW LONG TERM BIOSOLIDS STORAGE BUILDING - SECTIONS
176	14	C	5.0	14C5	NEW LONG TERM BIOSOLIDS STORAGE BUILDING - ELEVATIONS
177	14	S	1.0	14S1	NEW LONG TERM BIOSOLIDS STORAGE BUILDING - FOUNDATION PLAN
178	14	S	2.0	14S2	NEW LONG TERM BIOSOLIDS STORAGE BUILDING - CONTROL JOINT PLAN
179	14	S	3.0	14S3	NEW LONG TERM BIOSOLIDS STORAGE BUILDING - SECTIONS AND DETAILS
180	14	E	1.0	14E1	NEW LONG TERM BIOSOLIDS STORAGE BUILDING - POWER AND LIGHTING PLAN

DRAWING INDEX

FRANKFORT WASTEWATER TREATMENT FACILITY IMPROVEMENTS PROJECT

SHEET TYPE DEFINITIONS:

G - GENERAL
D - DEMOLITION
A - ARCHITECTURAL
C - CIVIL/PROCESS
S - STRUCTURAL
M - HEATING, VENTILATION AND AIR CONDITIONING
P - PLUMBING
E - ELECTRICAL
I - INSTRUMENTATION AND CONTROL
Y - SITE

SHEET NUMBER	AREA	SHEET TYPE	NUMBER	SHEET DESIGNATION	
EXISTING ADMINISTRATION BUILDING MODIFICATIONS (AREA 15)					
181	15	D	1.0	15D1	EXISTING ADMINISTRATION BUILDING UPPER AND LOWER LEVEL - DEMOLITION PLANS
182	15	C	1.0	15C1	EXISTING ADMINISTRATION BUILDING UPPER AND LOWER - MODIFICATIONS PLANS
183	15	E	1.0	15E1	EXISTING ADMINISTRATION BUILDING UPPER AND LOWER - POWER PLANS
MISCELLANEOUS DETAILS (AREA 16)					
184	16	Y	1.0	16Y1	MISCELLANEOUS SITE DETAILS
185	16	Y	2.0	16Y2	MISCELLANEOUS SITE DETAILS
186	16	Y	3.0	16Y3	MISCELLANEOUS SITE DETAILS
187	16	C	1.0	16C1	PROCESS VALVE SCHEDULE
188	16	C	2.0	16C2	MISCELLANEOUS DETAILS
189	16	C	3.0	16C3	MISCELLANEOUS DETAILS
190	16	C	4.0	16C4	DOOR AND WINDOW SCHEDULE AND DETAILS
191	16	S	1.0	16S1	TYPICAL STRUCTURAL DETAILS
192	16	S	2.0	16S2	TYPICAL STRUCTURAL DETAILS
193	16	S	3.0	16S3	TYPICAL STRUCTURAL DETAILS
194	16	S	4.0	16S4	TYPICAL STRUCTURAL DETAILS
195	16	S	5.0	16S5	TYPICAL STRUCTURAL DETAILS
196	16	S	6.0	16S6	TYPICAL STRUCTURAL DETAILS
197	16	E	1.0	16E1	PANEL SCHEDULES
198	16	E	2.0	16E2	PANEL SCHEDULES
199	16	E	3.0	16E3	ELECTRICAL DETAILS
200	16	E	4.0	16E4	ELECTRICAL DETAILS
201	16	EC	1.0	16EC1	EROSION CONTROL DETAILS
202	16	EC	2.0	16EC2	EROSION CONTROL DETAILS - NEW GRADING PLAN
ELECTRICAL (AREA 17)					
203	17	E	1.0	17E1	OVERALL ELECTRICAL ONE-LINE
204	17	E	2.0	17E2	17E ELECT ONE-LINE DIAGRAM #1
205	17	E	3.0	17E3	EXISTING LAGOON PUMP STATION ONE-LINE DIAGRAM
206	17	E	4.0	17E4	EXISTING PRIMARY SLUDGE PUMP ROOM ONE-LINE DIAGRAM
207	17	E	5.0	17E5	AERATION BUILDING MCC-2 AND MCC-2E ONE-LINE DEMO
208	17	E	6.0	17E6	AERATION BUILDING PP-AER AND PP-AER-E ONE-LINE DIAGRAM
209	17	E	7.0	17E7	SECONDARY CONTROL BUILDING ONE-LINE DIAGRAM
210	17	E	8.0	17E8	FILTER BUILDING MCC-4 AND MCC-4E ONE-LINE DIAGRAM
211	17	E	9.0	17E9	THICKENING AND DEWATERING BUILDING ONE-LINE DIAGRAM
212	17	E	10.0	17E10	SECONDARY CONTROL BUILDING ONE-LINE DIAGRAM
213	17	E	11.0	17E11	DIGESTER CONTROL BUILDING ONE-LINE DIAGRAM
214	17	E	12.0	17E12	CONTROL ONE-LINE DIAGRAMS
215	17	E	13.0	17E13	CONTROL ONE-LINE DIAGRAMS
216	17	E	14.0	17E14	CONTROL ONE-LINE DIAGRAMS
217	17	E	15.0	17E15	CONTROL ONE-LINE DIAGRAMS
218	17	E	16.0	17E16	CONTROL ONE-LINE DIAGRAMS
219	17	E	17.0	17E17	CONTROL ONE-LINE DIAGRAMS
INSTRUMENTATION AND CONTROL (AREA 18)					
220	18	N	1.0	18N1	PIPING AND INSTRUMENTATION DRAWING HEADWORKS
221	18	N	2.0	18N2	PIPING AND INSTRUMENTATION DRAWING EQUALIZATION LAGOONS
222	18	N	3.0	18N3	PIPING AND INSTRUMENTATION DRAWING AERATION
223	18	N	4.0	18N4	PIPING AND INSTRUMENTATION DRAWING SECONDARY CLARIFIERS AND WAS
224	18	N	5.0	18N5	PIPING AND INSTRUMENTATION DRAWING TERTIARY FILTERS
225	18	N	6.0	18N6	PIPING AND INSTRUMENTATION DRAWING THICKENING AND DEWATERING
226	18	N	7.0	18N7	PIPING AND INSTRUMENTATION DRAWING DIGESTERS AND SLUDGE PROCESS
227	18	N	8.0	18N8	PIPING AND INSTRUMENTATION DRAWING CHLORINE CONTACT TANK
228	18	N	9.0	18N9	PIPING AND INSTRUMENTATION DRAWING NETWORK DIAGRAM

"For Vewing Purposes Only - Visit wesslerengineering.com to Purchase"

SCALE VERIFICATION	DRAWN BY	MLN
BAR IS ONE INCH LONG ON ORIGINAL DRAWING	CHECKED BY	MLT
	APPROVED BY	RWH
	ISSUE DATE	MARCH 2020
	PROJECT NUMBER	193216-04-001

NO.	DATE	INITIALS	REVISION DESCRIPTIONS

ROBERT W. HOLDEN, II REGISTERED No. 10000096 STATE OF INDIANA PROFESSIONAL ENGINEER 03/04/2020

WESSLER ENGINEERING
More than a Project™

WASTEWATER SYSTEM EXPANSION

CITY OF FRANKFORT, INDIANA
CONTRACT A - WASTEWATER TREATMENT PLANT

DRAWING INDEX VOLUME 2

SHEET NO. **1G3**

PAGE NO. 3

Drawing: J:\Frankfort\Projects\193216 Frankfort WWTP Exp\CAD 04-001\DWG\Sheets\Area 1 - Gen\1G-GS.dwg | Layout: DRAWING INDEX VOLUME 2-1G3 | Plotted: 03/05/20 @ 12:36:44 | LastSavedBy: MikeN

"For Vewing Purposes Only - Visit wesslerengineering.com to Purchase"

LOCATION AND SCOPE OF WORK PLAN

0 250 500 1000
1"=500'

HORIZONTAL AND VERTICAL CONTROL INFORMATION

NOTES:
1. A FIELD SURVEY WAS PERFORMED IN FEBRUARY 2019.
2. COORDINATES (INDIANA STATE PLANE, WEST ZONE, NAD 83) ARE BASED ON INCORS.
3. ELEVATIONS (NGVD 29) ARE BASED ON THE WWTP TBM.
4. UNITS ARE U.S. SURVEY FEET.
5. CONTROL POINTS WERE SET USING GPS.

BENCHMARK DESCRIPTION:
1. TBM NO. 1 - SQUARE CUT IN TOP OF EAST CONCRETE WALL OF PARSHALL FLUME STRUCTURE, LOWER WALL SECTION, ADJACENT TO EAST MOST ACCESS STAIRS. EL 840.06

CONTROL POINTS

POINT	NORTHING	EASTING	ELEVATION	DESCRIPTION
1	1839869.36	3113471.26	831.2	5/8" REBAR
2	1839609.39	3113471.95	829.1	5/8" REBAR
3	1839637.76	3113135.43	836.1	5/8" REBAR
4	1839665.64	3112798.56	837.3	5/8" REBAR
5	1839696.71	3112398.28	835.9	5/8" REBAR
6	1839594.27	3111045.53	840.1	5/8" REBAR
7	1839276.53	3111029.15	841.8	5/8" REBAR
8	1838724.00	3111189.84	842.1	5/8" REBAR
9	1838745.77	3110690.91	844.5	5/8" REBAR
10	1839112.26	3110679.18	841.0	5/8" REBAR
11	1839621.21	3113334.04	833.0	5/8" REBAR
12	1838867.92	3107406.39	846.3	5/8" REBAR
13	1838968.91	3107023.12	846.2	5/8" REBAR
14	1838524.14	3106738.83	838.4	5/8" REBAR
15	1836489.41	3103440.62	850.2	5/8" REBAR
16	1836769.30	3103441.79	849.1	5/8" REBAR

SCALE VERIFICATION
BAR IS ONE INCH LONG ON ORIGINAL DRAWING

DRAWN BY JRW
CHECKED BY ALT
APPROVED BY RWH
ISSUE DATE MARCH 2020
PROJECT NUMBER 193216-04-001

NO.	DATE	INITIALS	REVISION DESCRIPTIONS

ROBERT W. HOLDEN, III REGISTERED No. 10000096 STATE OF INDIANA PROFESSIONAL ENGINEER 03/04/2020

WESSLER ENGINEERING
More than a Project™

WASTEWATER SYSTEM EXPANSION
CITY OF FRANKFORT, INDIANA
CONTRACT A - WASTEWATER TREATMENT PLANT

LOCATION AND SCOPE OF WORK PLAN

SHEET NO. 1G4
PAGE NO. 4

Drawing: J:\Frankfort\Projects\193216 Frankfort WWTP Exp\CAD 04-0010\DWG\Sheets\Area 1 - Gen\1G-GS.dwg | Layout: LOCATION AND SCOPE OF WORK PLAN-1G4 | Plotted: 03/05/20 @ 10:14:56 | LastSavedBy: JonathanL

EXISTING FEATURES LEGEND

SYMBOL	DESCRIPTION	SYMBOL	DESCRIPTION	SYMBOL	DESCRIPTION
BM	BENCH MARK	CS	CISTERN		EASEMENT - CONSTRUCTION/PERMANENT
TBM	TEMPORARY BENCH MARK	E EM	ELECTRIC METER		LOT BOUNDARY
SB 01	SOIL BORING LOCATION	AC	AIR CONDITIONING UNIT	PL	PROPERTY BOUNDARY
	SECTION CORNER	XXX	UTILITY RISER (DEFINED BY UTILITY)		RIGHT-OF-WAY - TEMPORARY/PERMANENT
	DRILL HOLE IN CONCRETE/HARRISON MONUMENT	XXX	UTILITY PEDESTAL (DEFINED BY UTILITY)		SECTION BOUNDARY
CP	CONTROL POINT (SET/FOUND)		UTILITY MARKER (DEFINED BY UTILITY)		WETLANDS
MG	MAGNETIC NAIL (SET/FOUND)	J	JOINT POWER/TELEPHONE POLE	849	CONTOUR - INTERMEDIATE ELEVATION
BS	BOAT SPIKE (SET/FOUND)	L	LIGHT POLE	850	CONTOUR - INDEX ELEVATION
PK	PK NAIL (SET/FOUND)	P L	LIGHT ON POWER POLE	OHE OHE	OVERHEAD ELECTRIC
RS	RAILROAD SPIKE (SET/FOUND)	J L	LIGHT ON JOINT POLE	OHC OHC	OVERHEAD CABLE TV
R/W	R/W MARKER - CONCRETE/GRANITE/STONE	P	POWER POLE	OHT OHT	OVERHEAD TELEPHONE
	IRON PIPE/IRON PIN/REBAR (WITH DIAMETER)	T	TELEPHONE POLE	UGC UGC	UNDERGROUND CABLE TV
BP	BRASS PLUG		LAMP POST	UGE UGE	UNDERGROUND ELECTRIC
C	CABLE TV MANHOLE		GUY ANCHOR	UGF UGF	UNDERGROUND FIBER OPTIC
E	ELECTRIC MANHOLE		GUY POLE OR STUB	G G G	GAS MAIN
G	GAS MANHOLE		CONTROLLER CABINET	DG DG	DIGESTER GAS
O	OTHER MANHOLE	FP	FLAG POLE	P P P	PETROLEUM MAIN
T	TELEPHONE MANHOLE		POST	UGT UGT	UNDERGROUND TELEPHONE
TEL	TELEPHONE VAULT		GROUND LIGHT	W W W	WATER MAIN
I	TRAFFIC MANHOLE	M	MAILBOX	W W W	WATER SERVICE
H	TRAFFIC HANDHOLE	M M	DOUBLE/MULTIPLE MAILBOX	FM FM	FORCEMAIN
W	WATER MANHOLE		MAST ARM POLE		GRAVITY SEWER PIPE
A	AIR RELEASE VALVE		TRAFFIC SIGNAL STRAIN POLE		PLANT CHLORINE PIPE
S	SANITARY SEWER MANHOLE		SIGNAL LOOP DETECTOR BOX		TOP OF BANK/TOE OF SLOPE
D	DRAINAGE/STORM SEWER MANHOLE		SIGNAL LOOP DETECTOR LOOP		CENTERLINE OF DITCH/SWALE/STREAM
CO	SANITARY SEWER CLEANOUT		SIGN - SINGLE POST	X X X X X X X X	FENCE - FIELD
ST	SEPTIC TANK		SIGN - DOUBLE POST		FENCE - METAL
V	VALVE VAULT		SIGN - RAILROAD SIGNAL		FENCE - WOOD
	BEEHIVE INLET		SIGN - RAILROAD CROSSING		GUARDRAIL
	CURB INLET		BUSH		STREAM
	DROP INLET		STUMP		TREE/BRUSH LINE
	CATCH BASIN		TREE - CONIFEROUS	NPW	NON-POTABLE WATER
DS	DOWNSPOUT		TREE - DECIDUOUS		
GM	GAS METER		ROCK OUTCROP		
GV	GAS VALVE		SATELLITE		
GS	GAS SERVICE VALVE	SPH	SPRINKLER CONTROL VALVE		
PV	PETROLEUM VALVE	WM	WATER METER		
PS	PETROLEUM SHUTOFF VALVE	WV	WATER VALVE		
MW	GAS STATION MONITORING WELL	WS	WATER SERVICE VALVE		
FC	GAS STATION FILL CAP	W	WATER WELL		
GW	NATURAL GAS WELL/STORAGE WELL	WW	WET WELL		
SP	SPRINKLER HEAD		FIRE HYDRANT		
	YARD HYDRANT		PROCESS VALVE		

*NOTE: THIS TABLE IS A LISTING OF TYPICAL EXISTING SYMBOLS AND MAY NOT INCLUDE ALL EXISTING SYMBOLS FOUND WITHIN THIS PLAN SET. ALL PROPOSED ITEMS WILL BE CALLED OUT ON THEIR PLAN SHEETS. IF A QUESTION ARISES ON THE MEANING OF ANY SYMBOL NOT LISTED IN THIS TABLE, PLEASE CONTACT THE ENGINEER FOR CLARIFICATION. THE SYMBOLS ARE NOT TO SCALE.

TABLE OF ABBREVIATIONS

ABBREVIATION	DESCRIPTION	ABBREVIATION	DESCRIPTION
AFF	ABOVE FINISHED FLOOR	IPS	IRON PIPE SIZE
ALUM	ALUMINUM	ISPC	INDIANA STATE PLANE COORDINATE
APP	APPARENT	LB	POUND(S)
APPROX	APPROXIMATE(LY)	LF	LINEAR FEET
ASPH	ASPHALT	LN	LANE
ASSOC	ASSOCIATES	LS	LIFT STATION
ASTM	AMERICAN SOCIETY OF TESTING MATERIALS	MA EX	MATCH EXISTING
AVE	AVENUE	MJ	MECHANICAL JOINT
AVG	AVERAGE	MATL	MATERIAL
BLDG	BUILDING	MAX	MAXIMUM
BLVD	BOULEVARD	MH	MANHOLE
BM	BENCHMARK	MIN	MINIMUM
CO	CLEANOUT	MISC	MISCELLANEOUS
CI	CAST IRON	N	NORTHING, NORTH
CL	CENTER LINE	NGS	NATIONAL GEODETIC SURVEY
CMA	COLD MIX ASPHALT	NO.	NUMBER
CMP	CORRUGATED METAL PIPE	OC	ON CENTER
CMU	CONCRETE MASONRY UNIT	OD	OUTSIDE DIAMETER
CONC	CONCRETE	PC	POINT OF CURVE (BEGIN CURVE)
CONT	CONTINUOUS	POLY	POLYETHYLENE
CNR	CORNER	PI	POINT OF INTERSECTION
CP	CONTROL POINT	POT	POINT ON TANGENT
CPP	CORRUGATED PLASTIC PIPE	PT	POINT OF TANGENT (END CURVE)
CR STN	CRUSHED STONE	PSI	POUNDS PER SQUARE INCH
CYD	CUBIC YARD	PT	POINT
D	DEPTH	PVC	POLYVINYL CHLORIDE
DI	DUCTILE IRON	R	RADIUS
DI MJ	DUCTILE IRON MECHANICAL JOINT	ROW	RIGHT-OF-WAY
DBL	DOUBLE	RCP	REINFORCED CONCRETE PIPE
DIA	DIAMETER	RD	ROAD
DIP	DUCTILE IRON PIPE	S	SOUTH
DIPS	DUCTILE IRON PIPE SIZE	SR	STATE ROUTE
DR	DRIVE	SST	STAINLESS STEEL
E	EASTING, EAST	SVA	SERVICE VALVE ASSEMBLY
EF	EACH FACE	SB	SOIL BORING
EW	EACH WAY	SCHED	SCHEDULE
EA	EACH	SDR	STANDARD DIMENSION RATIO
EJ	EAST JORDAN IRON WORKS	SECT	SECTION
EL	ELEVATION	SF	SQUARE FEET
EX	EXISTING	SHT	SHEET
EXP	EXPANSION	SPECS	SPECIFICATION(S)
FFE	FINISH FLOOR ELEVATION	SQ	SQUARE
FM	FORCE MAIN	SRF	STATE REVOLVING FUND
FND	FOUND	ST	STREET
FT	FEET	STA	STATION
FTG	FOOTING	SYD	SQUARE YARD
GALV	GALVANIZED	TBM	TEMPORARY BENCHMARK
GPS	GLOBAL POSITIONING SYSTEM	TC	TOP OF CASTING
HMA	HOT MIX ASPHALT	TYP	TYPICAL
HDPE	HIGH DENSITY POLYETHYLENE	USGS	US GEOLOGICAL SURVEY
HORIZ	HORIZONTAL	VERT	VERTICAL
ID	INSIDE DIAMETER	VLV	VALVE
IE	INVERT ELEVATION	W	WIDTH, WEST
INC	INCORPORATED	WSE	WATER SURFACE ELEVATION
INDOT	INDIANA DEPARTMENT OF TRANSPORTATION	YR	YEAR
INSTR	INSTRUMENT		
INV	INVERT		

*NOTE: THIS TABLE IS A LISTING OF TYPICAL ABBREVIATIONS AND MAY NOT INCLUDE ALL ABBREVIATIONS FOUND WITHIN THIS PLAN SET. IF A QUESTION ARISES ON THE MEANING OF AN ABBREVIATION NOT LISTED IN THIS TABLE, PLEASE CONTACT THE ENGINEER FOR CLARIFICATION.

GENERAL NOTES:

1. NOTIFY THE ENGINEER IF ANY CONFLICTING INFORMATION BECOMES APPARENT IN THE CONTRACT DOCUMENTS AS SOON AS POSSIBLE AND PRIOR TO THE COMMENCEMENT OF ANY WORK IN THE VICINITY OF OR RELATIVE TO THE APPARENT CONFLICT SO THAT CLARIFICATION MAY OCCUR PRIOR TO CONSTRUCTION.
2. ANY ALTERATIONS TO THESE DRAWINGS NOT AUTHORIZED BY WESSLER ENGINEERING AND NOT IN ACCORDANCE WITH THE DRAWINGS, SPECIFICATIONS AND RECORDS ON FILE AT WESSLER ENGINEERING SHALL RELIEVE WESSLER ENGINEERING OF ANY RESPONSIBILITY FOR THE ACCURACY OF THE DRAWINGS.
3. USE CAUTION DURING THE EXECUTION OF WORK TO PREVENT DAMAGE TO STATE, COUNTY, MUNICIPAL, AND PRIVATE PROPERTY. REPAIR ALL DAMAGES AS A RESULT OF OPERATIONS, INCLUDING DAMAGE TO DRAINAGE STRUCTURES, FIELD TILES, PUBLIC/PRIVATE ROADS, AND LANDSCAPING (INCLUDING FENCING). REPAIR AND REPLACE DAMAGED ITEMS AT NO ADDITIONAL COST TO THE OWNER. PERFORM ALL REPAIR AND REPLACEMENT WORK TO THE SATISFACTION OF THE PERMITTING AGENCY, THE OWNER AND THE ENGINEER.
4. TAKE CARE TO AVOID DAMAGE TO PAVED AREAS WHICH ARE NOT SPECIFICALLY CALLED OUT FOR REPAIR OR REPLACEMENT. REPAIR, OR REPLACE ALL SUCH PAVEMENTS WHICH ARE DAMAGED BY CONSTRUCTION ACTIVITIES AND CONSTRUCTION TRAFFIC AT NO ADDITIONAL COST TO THE OWNER.
5. OBTAIN ALL TEMPORARY EASEMENTS REQUIRED FOR THE CONSTRUCTION OF THE PROJECT AT NO ADDITIONAL COST TO THE OWNER.
6. COMPLY WITH ALL APPLICABLE PERMITS AND REGULATIONS. APPLICABLE PERMITS ISSUED TO THE OWNER WILL BE MADE AVAILABLE TO THE CONTRACTOR. CONTACT ALL APPLICABLE PERMITTING AGENCIES WITHIN THE TIME PERIOD SPECIFIED BY THAT AGENCY PRIOR TO BEGINNING CONSTRUCTION.
7. ALL PRIVATE WELL LOCATIONS SHOWN ON THE DRAWINGS ARE APPROXIMATE. FIELD VERIFY AND DETERMINE EXACT LOCATIONS OF ALL PRIVATE WELLS IN THE PROJECT AREA.
8. ALL EXISTING AND NEW UTILITY INFORMATION, INCLUDING BUT NOT LIMITED TO LOCATION, SIZE AND INVERT ELEVATION, IS SHOWN BASED UPON AVAILABLE INFORMATION. THE ENGINEER DOES NOT GUARANTEE OR ASSUME SUCH INFORMATION TO BE TRUE, ACCURATE, ALL INCLUSIVE OR EVEN APPROXIMATE. CONTACT THE INDIANA UNDERGROUND PLANT PROTECTION SERVICE (IUPPS) AT LEAST FORTY-EIGHT (48) HOURS IN ADVANCE OF ANY CONSTRUCTION ACTIVITY. CONTACT NON-MEMBER UTILITIES DIRECTLY.
9. DETERMINE WHICH UTILITIES MAY CONFLICT WITH WORK AND VERIFY THEIR LOCATION, SIZE AND ELEVATION PRIOR TO CONSTRUCTION AND DETERMINE IF THERE ARE ANY DISCREPANCIES OR CONFLICTS. IF ANY DISCREPANCIES OR CONFLICTS ARE DISCOVERED, NOTIFY THE ENGINEER AS SOON AS POSSIBLE.
10. EXISTING UTILITY SERVICE LINES TO INDIVIDUAL CUSTOMERS MAY NOT BE SHOWN ON THE DRAWINGS. ASSUME THAT UNDERGROUND SERVICE LINES FOR ALL UTILITIES EXIST TO EACH PROPERTY ALONG THE ROUTE OF THE PLANNED IMPROVEMENTS.
11. COORDINATE ALL WORK WITH THE RESPECTIVE UTILITIES. SCHEDULE WORK ACCORDINGLY, AND NOTIFY ALL UTILITIES A MINIMUM OF TWO (2) WEEKS IN ADVANCE OF ANY CONSTRUCTION ACTIVITY.
12. COORDINATE PLANNED UTILITY SERVICE INTERRUPTIONS WITH THE RESPECTIVE UTILITIES AND THE UTILITIES' AFFECTED CUSTOMERS. SERVICE INTERRUPTIONS SHOULD NOT LAST MORE THAN FOUR (4) HOURS. GIVE WRITTEN NOTICE TO ALL AFFECTED UTILITY CUSTOMERS AND PROPERTY OWNERS AT LEAST TWENTY-FOUR (24) HOURS BUT NOT MORE THAN SEVENTY-TWO (72) HOURS PRIOR TO ANY PLANNED INTERRUPTION OF UTILITY SERVICE.
13. USE CAUTION DURING THE EXECUTION OF WORK TO PREVENT DAMAGE TO EXISTING UTILITIES. REPAIR OR REPLACE ALL PUBLIC AND PRIVATE FACILITIES DAMAGED AS A RESULT OF CONSTRUCTION OPERATIONS.
14. BRACE AND PROTECT ALL UTILITY POLES AND EXISTING STRUCTURES ADJACENT TO NEW EXCAVATIONS. UTILITY POLE BRACING SHALL BE AS DIRECTED BY THE GOVERNING UTILITY.
15. MAINTAIN EXISTING STORMWATER DRAINAGE FOR THE ENTIRE DURATION OF THE PROJECT.
16. DO NOT DISTURB EXISTING MANHOLES OR INLETS, UNLESS NOTED OTHERWISE.
17. ALL EQUIPMENT, APPURTENANCES AND PIPING REMOVED AS PART OF THE DEMOLITION SHALL FIRST BE OFFERED TO THE OWNER FOR SALVAGE. DELIVER SALVAGED ITEMS SELECTED BY OWNER TO A LOCATION DESIGNATED BY THE OWNER OR ENGINEER. IN THE EVENT THE OWNER DOES NOT ELECT TO KEEP THE REMOVED ITEMS, REMOVE SUCH ITEMS FROM THE SITE AND DISPOSE OF AT A LOCATION APPROVED FOR SUCH DISPOSAL AT THE CONTRACTOR'S EXPENSE.
18. COORDINATE STAGING AREA LOCATIONS WITH THE OWNER.
19. ALL CONSTRUCTION TRAFFIC SHALL USE MAJOR ROADS. NO CONSTRUCTION TRAFFIC SHALL USE LOCAL STREETS FOR INDIRECT ACCESS.
20. TO CONTROL DUST, REMOVE SOIL FROM STREETS USED BY CONSTRUCTION TRAFFIC DAILY, VACUUM AND WATER AS NECESSARY AND/OR AS DIRECTED BY THE OWNER.
21. PLACE NEW ASPHALT PAVEMENT FLUSH WITH ADA RAMPS.
22. ALL EXISTING PIPING MAY NOT BE SHOWN. REFERENCE EXISTING RECORD DRAWINGS ON FILE WITH THE OWNER AND WESSLER ENGINEERING FOR ADDITIONAL INFORMATION OF EXISTING PIPING AND CONDUIT THROUGHOUT THE PLANT SITE.
23. THE WORK SHOWN ON THESE DRAWINGS IS OCCURRING ON A PLANT SITE IN WHICH BURIED ELECTRICAL CONDUIT AND SMALL PIPING MAY EXIST THROUGHOUT AND IN THE VICINITY OF THE PROJECT AND MAY NOT BE SHOWN ON THESE DRAWINGS. EXPECT TO ENCOUNTER BURIED ELECTRICAL AND COMMUNICATIONS WIRING, WITH OR WITHOUT CONDUIT, SMALL PIPING, AND FIELD TILE WHILE DIGGING ON THIS SITE.
24. NEW PIPING CARRYING LIQUIDS SHALL HAVE MINIMUM COVER AS DEFINED IN THE MISCELLANEOUS SITE DETAILS, UNLESS SPECIFIC ELEVATIONS ON THE DRAWINGS INDICATE OTHERWISE.
25. INSPECT THE SITE PRIOR TO BIDDING TO UNDERSTAND THE EXTENT OF THE DEMOLITION WORK INVOLVED AND ADJUST BID ACCORDINGLY.
26. COMPLETELY REMOVE UNDERGROUND PIPING THAT HAS PREVIOUSLY BEEN OR WILL BE TAKEN OUT OF SERVICE, IN CONFLICT WITH THE NEW WORK. UNLESS OTHERWISE NOTED, ABANDON IN PLACE ALL UNDERGROUND PIPING NOT IN CONFLICT WITH THE NEW WORK. DO NOT LEAVE ABANDONED PIPING LIVE. SEE SPECIFICATION SECTION 02050 FOR DEMOLITION PROCEDURES. SEE SPECIFICATION SECTION 01550 FOR PLANT OPERATIONS DURING CONSTRUCTION FOR COORDINATION OF DEMOLITION WORK AND NEW CONSTRUCTION.
27. ALL EQUIPMENT TO BE REMOVED THAT HAS ELECTRICAL COMPONENTS, CONDUIT AND WIRING, OR SMALL PIPING CONNECTED SHALL HAVE THE ELECTRICAL COMPONENTS AND SMALL PIPING REMOVED BACK TO THE SOURCE.
28. LENGTHS OF SEWERS AS SHOWN ON THE DRAWINGS AND INDICATED AS LINEAR FEET (LF) ARE FROM CENTER TO CENTER OF STRUCTURES.
29. NORTHING AND EASTING INFORMATION IS GIVEN AT CENTER OF STRUCTURE UNLESS OTHERWISE NOTED.
30. PLACE NO. 8 CRUSHED AGGREGATE BETWEEN PIPES AT ALL PIPE CROSSINGS TO PREVENT PIPE SETTLEMENT UNLESS SHOWN OTHERWISE.
31. VERIFY EXISTING SEWER INVERTS AND LOCATIONS PRIOR TO CONSTRUCTION AND DETERMINE IF THERE ARE ANY DISCREPANCIES OR CONFLICTS.
32. ADJUST SEWER LATERALS AS NECESSARY TO AVOID CONFLICTS. LATERALS THAT REQUIRE FIELD ADJUSTMENT SHALL BE LAID AT THE MINIMUM SLOPE AS SPECIFIED IN THE DRAWINGS AND SPECIFICATIONS.
33. INSTALL SEWER SERVICE LATERALS TO THE RIGHT-OF-WAY OR EDGE OF EASEMENT. (CLIENT DEPENDANT)
34. ALL SANITARY SEWER PIPE, INCLUDING GRAVITY SEWERS, LATERAL WYES AND SERVICE LATERAL PIPE LOCATED WITHIN 50 FEET OF PRIVATE WELLS SHALL BE SDR 21 PVC WATER GRADE PRESSURE PIPE UNLESS SPECIFICALLY INDICATED OTHERWISE. ALL SANITARY SEWER PIPE, INCLUDING GRAVITY SEWERS, LATERAL WYES AND SERVICE LATERAL PIPE NOT LOCATED WITHIN 50 FEET OF PRIVATE WELLS SHALL BE SDR 35 PVC SEWER GRADE PIPE, UNLESS SPECIFICALLY INDICATED OTHERWISE.
35. RESET ALL MAILBOXES AND SIGNS DISTURBED BY CONSTRUCTION ACTIVITIES.
36. IF REQUIRED, PLACE TEMPORARY OVERNIGHT AGGREGATE WEDGES AT DRIVEWAYS TO ALLOW PROPERTY OWNER ACCESS.

UTILITY CONTACTS

WATER
FRANKFORT WATER WORKS
260 E WASHINGTON STREET
FRANKFORT, INDIANA 46041
(765) 654-5566

GAS
VECTREN
500 N HOAKE
FRANKFORT, INDIANA 46041
(765) 449-5721

SEWER
CITY OF FRANKFORT
300 N COLUMBIA STREET
FRANKFORT, INDIANA 46041
(765) 654-8343

ELECTRIC
CITY OF FRANKFORT CITY LIGHT & POWER
1000 WASHINGTON AVENUE
FRANKFORT, INDIANA 46041
(765) 659-3362

TELEPHONE
SBC
1450 WASHINGTON AVENUE
FRANKFORT, INDIANA 46041
(800) 382-5544

Indiana 811
Know what's below. Call before you dig.

"For Viewing Purposes Only - Visit wesslerengineering.com to Purchase"

SCALE VERIFICATION	DRAWN BY	DLC
BAR IS ONE INCH LONG ON ORIGINAL DRAWING	CHECKED BY	KLT
	APPROVED BY	RWH
	ISSUE DATE	MARCH 2020
	PROJECT NUMBER	193216-04-001

NO.	DATE	INITIALS	REVISION DESCRIPTIONS

ROBERT W. HOLDEN II REGISTERED No. 10000096 STATE OF INDIANA PROFESSIONAL ENGINEER 03/04/2020

WESSLER ENGINEERING
More than a Project™

WASTEWATER SYSTEM EXPANSION
CITY OF FRANKFORT, INDIANA
CONTRACT A - WASTEWATER TREATMENT PLANT

PLAN NOTES, UTILITIES, ABBREVIATIONS AND LEGEND

SHEET NO. **1G5**
PAGE NO. 5

Drawing: J:\Frankfort\Projects\193216 Frankfort WWTP Exp\CAD 04-001\DWG\Sheets\Area 1 - Gen\1G-GS.dwg | Layout: PLAN NOTES UTILITIES ABBREVIATION AND LEGEND-1G5 | Plotted: 03/05/20 @ 10:14:57 | LastSavedBy: JonathanL

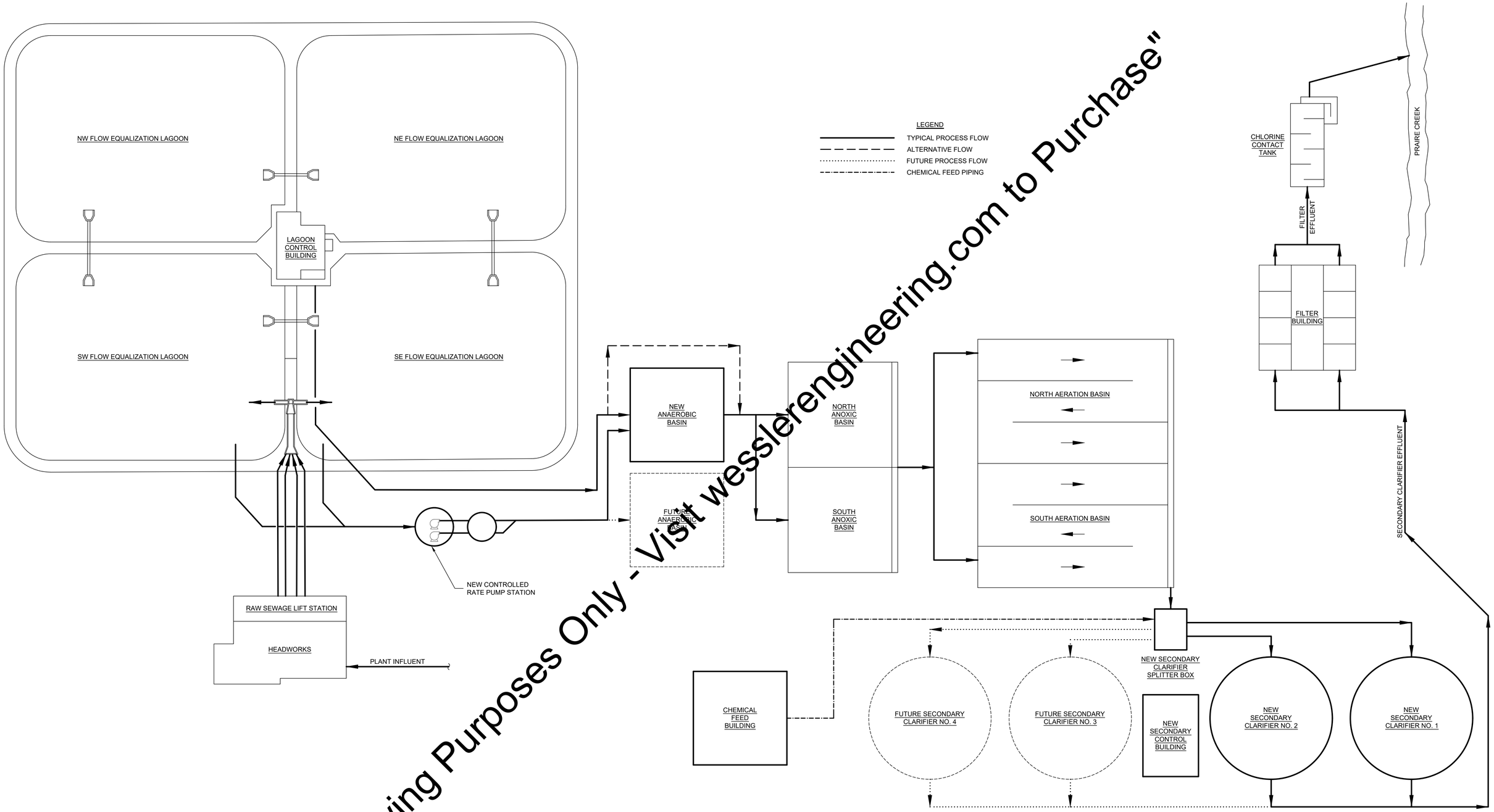

"For Vewing Purposes Only - Visit wesslerengineering.com to Purchase"

SCALE VERIFICATION	DRAWN BY	DLT
BAR IS ONE INCH LONG ON ORIGINAL DRAWING	CHECKED BY	PRP
	APPROVED BY	RWH
	ISSUE DATE	MARCH 2020
	PROJECT NUMBER	193216-04-001

NO.	DATE	INITIALS	REVISION DESCRIPTIONS

ROBERT W. HOLDEN II REGISTERED No. 10000096 STATE OF INDIANA PROFESSIONAL ENGINEER 03MAR2020

WESSLER ENGINEERING
More than a Project™

WASTEWATER SYSTEM EXPANSION

CITY OF FRANKFORT, INDIANA
CONTRACT A - WASTEWATER TREATMENT PLANT

PROCESS FLOW DIAGRAM

SHEET NO. **1G6**

PAGE NO. 6

Drawing: J:\Frankfort\Projects\193216 Frankfort WWTP Exp\CAD 04-001\DWG\Sheets\Area 1 - Gen\1G-PD.dwg | Layout: 1G6 - PROCESS FLOW DIAGRAM | Plotted: 03/05/20 @ 10:15:16 | LastSavedBy: CurtisG

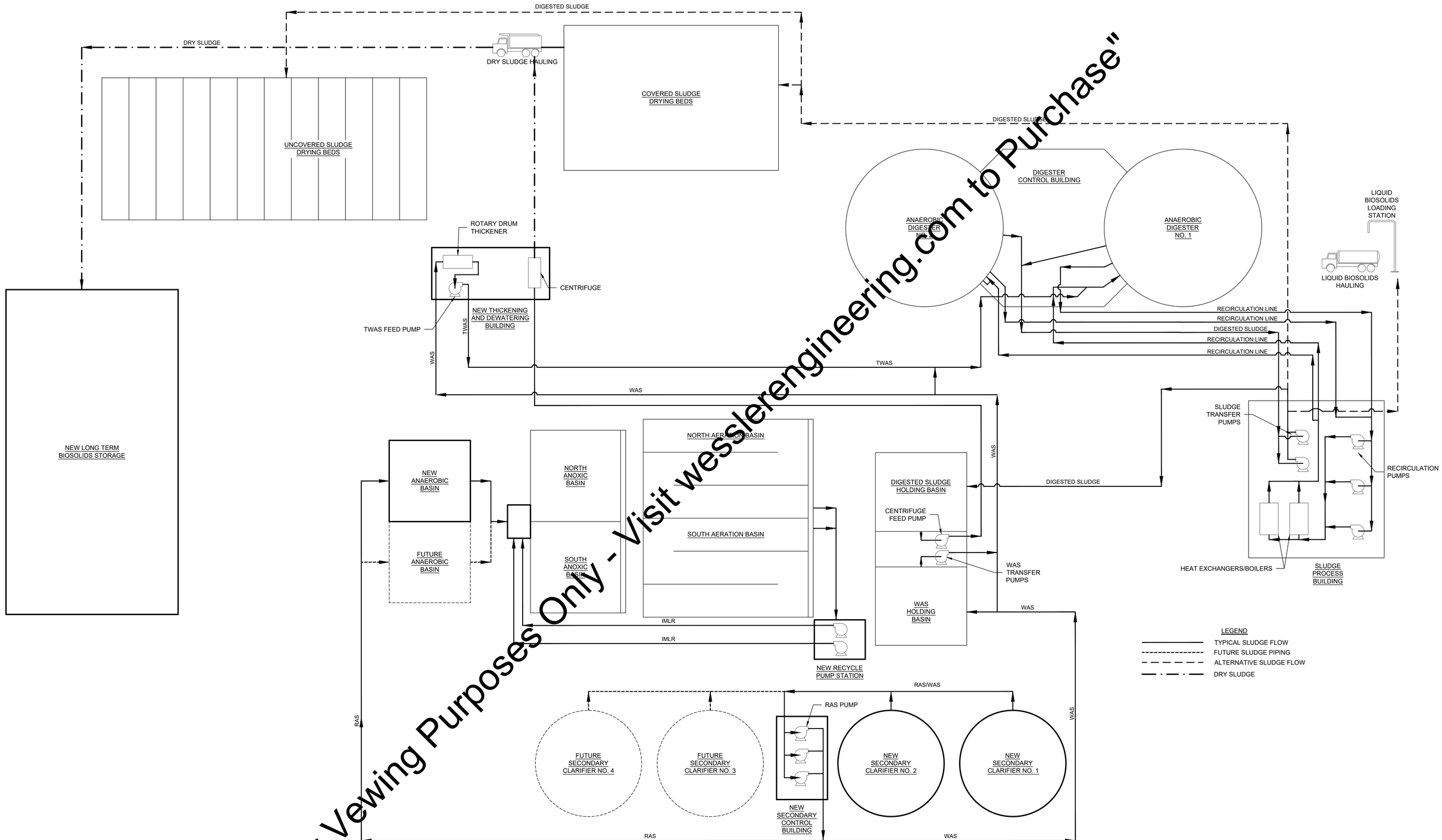

"For Vewing Purposes Only - Visit wesslerengineering.com to Purchase"

SCALE VERIFICATION	DRAWN BY	DLC
BAR IS ONE INCH LONG ON ORIGINAL DRAWING	CHECKED BY	PRP
	APPROVED BY	RWH
	ISSUE DATE	MARCH 2020
	PROJECT NUMBER	193216-04-001

NO.	DATE	INITIALS	REVISION DESCRIPTIONS

ROBERT W. HOLDER, II REGISTERED No. 10000096 STATE OF INDIANA PROFESSIONAL ENGINEER 03/04/2020

WESSLER ENGINEERING
More than a Project™

WASTEWATER SYSTEM EXPANSION

CITY OF FRANKFORT, INDIANA
CONTRACT A - WASTEWATER TREATMENT PLANT

SLUDGE FLOW DIAGRAM

SHEET NO. **1G7**

PAGE NO. 7

Drawing: J:\Frankfort\Projects\193216 Frankfort WWTP Exp\CAD 04-001\DWG\Sheets\Area 1 - Gen\1G-PD.dwg | Layout: 1G7 - SLUDGE FLOW DIAGRAM | Plotted: 03/05/20 @ 10:15:16 | LastSavedBy: CurtisG

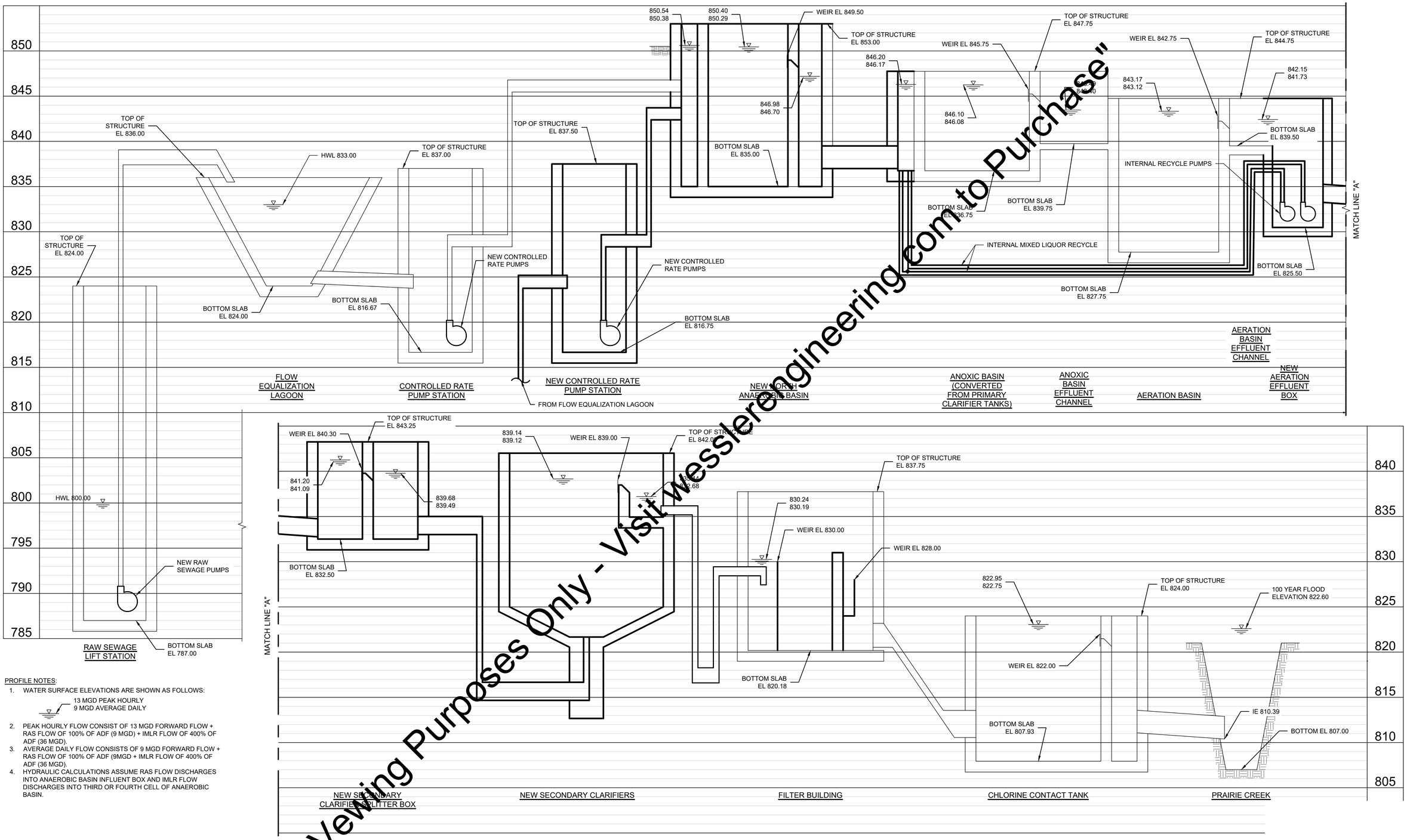

PROFILE NOTES:

1. WATER SURFACE ELEVATIONS ARE SHOWN AS FOLLOWS:
   13 MGD PEAK HOURLY
   9 MGD AVERAGE DAILY
2. PEAK HOURLY FLOW CONSIST OF 13 MGD FORWARD FLOW + RAS FLOW OF 100% OF ADF (9 MGD) + IMLR FLOW OF 400% OF ADF (36 MGD).
3. AVERAGE DAILY FLOW CONSISTS OF 9 MGD FORWARD FLOW + RAS FLOW OF 100% OF ADF (9MGD + IMLR FLOW OF 400% OF ADF (36 MGD).
4. HYDRAULIC CALCULATIONS ASSUME RAS FLOW DISCHARGES INTO ANAEROBIC BASIN INFLUENT BOX AND IMLR FLOW DISCHARGES INTO THIRD OR FOURTH CELL OF ANAEROBIC BASIN.

"For Viewing Purposes Only - Visit wesslerengineering.com to Purchase"

SCALE VERIFICATION	DRAWN BY	DLE
BAR IS ONE INCH LONG ON ORIGINAL DRAWING	CHECKED BY	KLT
	APPROVED BY	RWH
	ISSUE DATE	MARCH 2020
	PROJECT NUMBER	193216-04-001

NO.	DATE	INITIALS	REVISION DESCRIPTIONS

ROBERT W. HOLDEN, II
REGISTERED
No. 10000096
STATE OF INDIANA
PROFESSIONAL ENGINEER
03/04/2020

WESSLER ENGINEERING
More than a Project™

WASTEWATER SYSTEM EXPANSION

CITY OF FRANKFORT, INDIANA
CONTRACT A - WASTEWATER TREATMENT PLANT

HYDRAULIC PROFILE

SHEET NO.
1G8

PAGE NO.
8

Drawing: J:\Frankfort\Projects\193216 Frankfort WWTP Exp\CAD 04-001\DWGS\Sheets\Area 1 - Gen\1G-PD.dwg | Layout: 1G8 - HYDRAULIC PROFILE | Plotted: 03/05/20 @ 10:15:17 | LastSavedBy: CurtisG

Wastewater Treatment Plant Design Summary

Warsaw Wastewater Treatment Plant — **NPDES Permit No. IN0022934**

Component	Description	Design Parameters
Influent Characteristics	Average Daily Flow (ADF)	9.00 MGD
	Peak Hourly Flow (PHF)	13.00 MGD
	CBOD5	150 mg/L
	TSS	150 mg/L
	NH3-N	24.0 mg/L
	Phosphorus	6.0 mg/L
Influent Pumping	Raw Sewage Pumps	Four (4) at 8,200 gpm each
Influent Screening	Mechanical Bar Screen	Two (2) at 0.25-inch bar spacing: 10.0 MGD peak capacity, each
Flow Equalization	Number and Size	Four (4) @ 2.25 million gallons each
	Mixing	Three (3) PD blowers; 3,188 icfm each
Controlled Rate Pumps	Lagoon Building	Two (2) at 4,500 gpm each
	Controlled Rate Pump	Two (2) at 6,000 gpm each
A20 Process		
Anaerobic Basin	Volume	One (1) tank at 0.700 million gal.
	Detention Time	1.2 hr
	Mixing	Four (4) submersible mixers
Anoxic Basins	Volume	Two (2) tanks at 0.300 million gal.
	Detention Time	1.6 hr
	Mixing	One (1) submersible mixer per tank
Aeration Basins	Volume	Two (2) tanks at 1.00 million gal. each
	Detention Time	5.3 hrs
	Organic Loading	41.7 lbs CBOD5/1,000 cf
Aeration Blowers	Type and Size	Two (2) Turbo Blowers (3,000 cfm)
		Two (2) Centrifugal Blowers (2,700
	Air Required	6,322 cfm
Reycle Pump Station	Internal Mixed Liquor Recycle Pumps	Two (2) at 12,500 gpm each
		115-400% ADF Return to Anoxic Basin
Phosphorus Removal	Chemical	Aluminum Sulfate
	Design Dosage: no EBPR	43.5 gal/hr at ADF; 72.43 gal/hr at PHF
	Design Dosage: with EBPR	1.7 gal/hr at ADF; 2.8 gal/hr at PHF
	Peristaltic Feed Pumps	Two (2) at 0 to 50 gph each
	Storage Tanks	Two (2) at 4,600 gallons each
	Secondary Containment	16,000 gallons
	Application Point	Secondary Clarifier Splitter Box

Component	Description	Design Parameters
Secondary Clarifier	Number and Size	Two (2) 90-foot diameter, 14'-2" SWD
	Surface Settling Rate	1,022 gpd/sf at 13.0 MGD
	Dentention Time	2.5 hrs at 13.0 MGD
	Weir Overflow Rate	24,630 gpd/ft at 15.0 MGD
Filtration	Number and Size	Four (4) Cloth Media Filters, Total ADF rating of 9.0 MGD and peak of 15 MGD
	Filtration Rate	3.63 gpm/sf at ADF; 6.05 gpm/sf at 15
	Backwash Pumps	Four (4) at 130 gpm each
Disinfection	Chemical	Liquid Sodium Hypochlorite
	Contact Time	19.0 mins at 9 MGD; 13 mins at 13 MGD
	Peristaltic Feed Pumps	Two (2) at 0-37 gph each
De-Chlorination	Chemical	Liquid Sodium Biosulfate
	Peristaltic Feed Pumps	Two (2) at 0-37 gph each
Receiving Stream	Name	Prairie Creek
	Tributary to	South Fork of Wildcat Creek
	Stream Uses	Full Body Contact Recreation
	7-day, 1-in-10 year low flow	0 cfs
	100-Yr Flood Elevation	822.60-ft
Secondary Control Building	RAS/WAS Pumps	Three (3) at 4,000 gpm each
		6,250 gpm with two (2) running
WAS Holding Basin	Volume	One (1) tank 0.285 million gal.
	Mixing	Three (3) sumbersible mixers
Sludge Thickening	Number and Size	One (1) at 400 gpm
	Type	Rotary Drum Thickener
	Solids Loading	3,000 lbs/hr at 1.5% solids
Anaerobic Digestion	Number and Size	One(1) 55-ft diameter by 20-ft SWD and One (1) 50-ft diameter by 20-ft SWD
	Volume	647,163 gallons
	Organic Loading	95.6 lbs VS/ 1000 cf
	Detention Time	15.32 days
Digested Sludge Holding Basin	Volume	One (1) tank 0.285 million gal.
	Mixing	Three (3) sumbersible mixers
Mechincal Dewatering	Number and Type	One (1) Centrifuge
	Capacity	225 gpm; 4,125 lb/hr
	Daily Solids Production	9,340 lb/day
Sludge Drying Beds	Number	24 Inside; 12 Outside
	Size	20-ft by 100-ft by 2.5-ft each bed

"For Vewing Purposes Only - Visit wesslerengineering.com to Purchase"

SCALE VERIFICATION	DRAWN BY	DLC
BAR IS ONE INCH LONG ON ORIGINAL DRAWING	CHECKED BY	KLT
	APPROVED BY	RWH
	ISSUE DATE	MARCH 2020
	PROJECT NUMBER	193216-04-001

NO.	DATE	INITIALS	REVISION DESCRIPTIONS

ROBERT W. HOLDER, II — REGISTERED — No. 10000096 — STATE OF INDIANA — PROFESSIONAL ENGINEER — 03/04/2020

WESSLER ENGINEERING — More than a Project™

WASTEWATER SYSTEM EXPANSION

CITY OF FRANKFORT, INDIANA

CONTRACT A - WASTEWATER TREATMENT PLANT

DESIGN SUMMARY

SHEET NO. **1G9**

PAGE NO. 9

Drawing: J:\Frankfort\Projects\193216 Frankfort WWTP Exp\CAD 04-001\DWG\Sheets\Area 1 - Gen\1G-PD.dwg | Layout: 1G9 DESIGN SUMMARY | Plotted: 03/05/20 @ 10:15:18 | LastSavedBy: CurtisG

STRUCTURAL GENERAL NOTES:

A. GENERAL INFORMATION

1. SHOP DRAWINGS OF ALL FABRICATED ITEMS SHALL BE SUBMITTED FOR REVIEW PRIOR TO FABRICATION.

2. VERIFY DIMENSIONS AND DETAILS BEFORE BEGINNING WORK. COORDINATE WALL OPENINGS WITH PROCESS / MECHANICAL / ARCHITECTURAL DRAWINGS. CONTRACTOR SHALL CHECK AND COORDINATE SIZES AND LOCATIONS OF ALL BLOCK-OUTS, CONDUITS, PIPE SLEEVES, EMBEDDED ITEMS, ETC. WITH MECHANICAL AND ELECTRICAL.

3. HORIZONTAL RUNS OF ELECTRICAL CONDUIT ARE NOT PERMITTED IN CONCRETE.

4. EXISTING CONDITIONS ARE TO BE VERIFIED IN THE FIELD BY THE CONTRACTOR. VERIFICATION IS THE RESPONSIBILITY OF THE CONTRACTOR. CONTRACTOR IS TO IMMEDIATELY NOTIFY THE ENGINEER OF ANY DISCREPANCIES OR CONFLICTS BETWEEN EXISTING CONDITIONS AND DESIGN AND DETAILS INDICATED BY THESE DRAWINGS.

5. NO PIPES, SLEEVES, ETC. SHALL PASS THROUGH BEAMS OR COLUMNS UNLESS CLEARLY INDICATED ON STRUCTURAL PLANS OR AUTHORIZED BY THE ENGINEER.

6. STANDARD DETAILS ARE SHOWN ON DRAWINGS TITLED STANDARD DETAILS. THE STANDARD DETAILS INCLUDED MAY OR MAY NOT BE REFERENCED TO PLANS OR SECTIONS, BUT ARE TO BE USED AS APPLICABLE.

7. DETAILS NOT SPECIFICALLY INDICATED SHALL BE SIMILAR TO DETAILS SHOWN FOR SIMILAR CONDITIONS.

B. DESIGN

1. CODES AND SPECIFICATIONS

a. 2014 INDIANA BUILDING CODE - (2012 INTERNATIONAL BUILDING CODE).
b. ACI 318: BUILDING CODE REQUIREMENTS FOR REINFORCED CONCRETE.
c. ACI 350-06: CODE REQUIREMENTS FOR ENVIRONMENTAL ENGINEERING CONCRETE STRUCTURES .
d. ACI 301: SPECIFICATION FOR STRUCTURAL CONCRETE FOR BUILDINGS.
e. ACI 315: DETAILS AND DETAILING OF CONCRETE REINFORCING.
f. ACI 350.3-06: SEISMIC DESIGN OF LIQUID-CONTAINING CONCRETE STRUCTURES.
g. SPECIFICATIONS FOR STRUCTURAL STEEL FOR BUILDINGS (AISC 360-05).
h. DESIGN, FABRICATION, AND ERECTION OF STRUCTURAL ALUMINUM TO BE IN ACCORDANCE WITH THE ALUMINUM ASSOCIATION "SPECIFICATIONS FOR ALUMINUM STRUCTURES".
i. AMERICAN WELDING SOCIETY STANDARDS AND SPECIFICATIONS (AWS).
j. BUILDING CODE REQUIREMENTS FOR MASONRY STRUCTURES (TMS 402-11) AND SPECIFICATION FOR MASONRY STRUCTURES (TMS 602-11).
k. ASCE 7-10: MINIMUM DESIGN LOADS FOR BUILDINGS AND OTHER STRUCTURES.

2. DESIGN LIVE LOADS

MINIMUM ROOF LIVE LOAD (Lr):	30 PSF
SNOW :	
GROUND SNOW LOAD (Pg)	20 PSF
FLAT ROOF SNOW LOAD (Pf)	16 PSF
IMPORTANCE FACTOR (Is)	1.1
EXPOSURE FACTOR (Ce)	1.0
THERMAL FACTOR (Ct)	1.0
WIND :	
BASIC WIND SPEED	120 MPH
EXPOSURE CATEGORY	C
INTERNAL PRESSURE COEFFICIENT	+/- 0.55 (PARTIALLY ENCLOSED)
SEISMIC :	
RISK CATEGORY	III
SEISMIC IMPORTANCE FACTOR	1.25
MAPPED SPECTRAL RESPONSE (Ss)	0.139 g
MAPPED SPECTRAL RESPONSE (S1)	0.079 g
SITE CLASS	D
DESIGN SPECTRAL RESPONSE (SDS)	0.148 g
DESIGN SPECTRAL RESPONSE (SD1)	0.126 g
SEISMIC DESIGN CATEGORY	B
BASIC SEISMIC RESISTING SYSTEM	ORDINARY REINF CONC & MASONRY WALLS
DESIGN BASE SHEAR	SEE PLANS
RESPONSE COEFFICIENTS (Cs)	0.09
RESPONSE MODIFIER (R)	CONC R = 4 MASONRY R = 2
ANALYSIS PROCEDURE	EQUIVALENT LATERAL FORCE
GENERAL FLOOR LOADING:	
STAIRS, EXITS, WALKWAYS	100 PSF
FLOOR LOADING	SEE BUILDING PLAN

3. DESIGN WIND AND SEISMIC LOAD CRITERIA FOR CLADDING

a. CLADDING WIND LOADS BASED ON 2012 IBC, ASCE 7-10.
b. BUILDINGS ARE TO BE CONSIDERED PARTIALLY ENCLOSED. INTERNAL PRESSURE COEFFICIENT, Gcpi = +/- 0.55. EXTERNAL PRESSURE COEFFICIENTS ARE TO BE BASED ON COMPONENT EFFECTIVE WIND AREA AND ASCE 7-10.
c. VELOCITY PRESSURE COEFFICIENT, Kh BASED ON HEIGHT.
d. TOPOGRAPHIC FACTOR, Kzt = 1.0.
e. WIND DIRECTIONALITY FACTOR, Kd = 0.85.
f. VELOCITY PRESSURE, qz BASED ON CLADDING HEIGHT.
g. DESIGN WIND PRESSURE, P BASED ON qz AND ASCE 7-10 INTERNAL AND EXTERNAL PRESSURE COEFFICIENTS, C&C TRIBUTARY WIND AREA, ROOF OR WALL AREA ZONE.
h. ALLOWABLE STRESS INCREASE FOR WIND LOADING IS NOT PERMITTED.
i. CLADDING SEISMIC LOADS TO BE IN ACCORDANCE WITH 2012 IBC AND ASCE 7-10.

C. FOUNDATIONS

1. FOUNDATIONS ARE DESIGNED FOR THE FOLLOWING "NET" ALLOWABLE BEARING PRESSURE (PSF):

AREA	STRUCTURE DESCRIPTION	(PSF)
5	CONTROLLED RATE PS	2000
6	ANAEROBIC BASIN	2000
7	ANOXIC SPLITTER BOX	2000
8	SECONDARY CLARIFIERS	2000
8	CLARIFIER SPLITTER BOX	2000
9	SECONDARY CLARIFIER CONTROL BLDG	3000
13	THICKENING AND DEWATERING BLDG	1500
14	LONG TERM BIOSOLIDS STORAGE BLDG	1600

2. CONSTRUCT FOOTINGS ON ADEQUATE SUBGRADE SOIL OR ENGINEERED FILL. IN ADDITION, PLACE 8 INCHES OF # 8 STONE BELOW ALL STRUCTURES.

3. PROOFROLL EXPOSED FOUNDATION AND SLAB ON GRADE SUBGRADE SOILS TO DELINEATE SOFT SOILS.

4. ALL FOUNDATION EXCAVATIONS SHALL BE INSPECTED BY A QUALIFIED GEOTECHNICAL ENGINEER OR HIS REPRESENTATIVE TO VERIFY THAT THE STRUCTURE SUBGRADE MATERIALS ARE SUITABLE AND ARE CONSISTENT WITH THE SUBSURFACE INVESTIGATION & FOUNDATION RECOMMENDATIONS REPORT PREPARED BY ALT & WITZIG ENGINEERING, INC, DATED JUNE 19, 2019 AND LETTER DATED NOVEMBER 6, 2019. THE CONTRACTOR IS RESPONSIBLE FOR THE COST OF THIS REQUIREMENT.

D. CONCRETE

1. REINFORCING SHALL BE DETAILED ACCORDING TO THE ACI DETAILING MANUAL.

2. STANDEES ARE REQUIRED FOR REINF STEEL SUPPORT BETWEEN MATS IN SLABS.

3. ALL CONSTRUCTION JOINTS TO BE PLACED WITH CHAMFERED EDGES. SEE STANDARD DETAIL FOR CONSTRUCTION JOINTS.

4. CAST-IN-PLACE CONCRETE SHALL HAVE A MINIMUM ULTIMATE STRENGTH AT 28 DAYS OF 4500 PSI UNLESS OTHERWISE NOTED.

5. THE REINFORCING DETAILS SHOWN ON DRAWINGS TITLED "STANDARD STRUCTURAL DETAILS" ARE INTENDED TO ESTABLISH BASIC REINFORCING REQUIREMENTS FOR VARIOUS GENERAL TYPES OF HORIZONTAL AND VERTICAL JOINTS IN REINFORCED CONCRETE STRUCTURES. WHEN A CONDITION EXISTS IN A STRUCTURE THAT CONFORMS TO ONE OF THESE DETAILS, THE REINFORCING REQUIREMENTS SHOWN ON THE APPLICABLE DETAIL SHALL BE INCORPORATED INTO THE STRUCTURE UNLESS THE CONDITION IS SPECIFICALLY DETAILED ELSEWHERE ON THE DRAWINGS.

6. THE FOLLOWING CONCRETE COVER SHALL BE PROVIDED FOR REINFORCEMENT UNLESS OTHERWISE INDICATED:

a. CONCRETE CAST AGAINST AND PERMANENTLY EXPOSED TO EARTH, 3 INCHES.
b. CONCRETE EXPOSED TO EARTH, WEATHER OR FLUID SURFACES BUT CAST AGAINST FORMS, 2 INCHES.
c. SLABS:
FORMED CONCRETE SURFACES ABOVE WATER OR WASTE WATER: 2 INCHES
FORMED CONCRETE SURFACES ABOVE AREAS NOT CONTAINING WATER OR WASTE WATER: 1 INCH.

7. ALL DOWELS SHALL BE THE SAME SIZE AND SPACING AS THE BARS THAT ARE BEING DOWELED OR AS SHOWN ELSEWHERE ON THE DRAWINGS. ALL REINFORCING STEEL SHALL BE DOWELED INTO ADJACENT STRUCTURAL MEMBERS UNLESS SPECIFICALLY EXCEPTED.

8. "L" REPRESENTS A TENSION SPLICE, AS NOTED IN THE FOLLOWING TABLE FOR EACH SPECIFIC REINFORCING BAR SIZE. AN UNDIMENSIONED BEND REPRESENTS A STANDARD HOOK. TENSION SPLICES ARE IN ACCORDANCE WITH ACI 318 BASED ON GRADE 60 STEEL REINFORCING AND 4500 PSI 28 DAY CONCRETE STRENGTH, BUT ARE NOT TO BE LESS THAN THAT NOTED BELOW.

BAR SIZE	CONDITION OTHER	CONDITION TOP	
3	18"	21"	TOP BARS ARE HORIZONTAL BARS
4	20"	24"	WITH MORE THAN 12 INCHES OF
5	24"	30"	CONCRETE CAST BELOW THE BAR
6	30"	36"	
7	34"	44"	
8	40"	50"	
9	46"	60"	
10	57"	74"	

9. PROVIDE TREBLE STAGGER LAP SPLICES FOR ALL HORIZONTAL "HOOP" REINFORCING STEEL FOR CIRCULAR TANKS.

10. REINFORCING DETAILS SHOWN REPRESENT MINIMUM REQUIREMENTS. ALTERNATE BUT EQUAL METHODS ARE ACCEPTABLE, BUT THEY SHALL NOT BE USED WITHOUT PRIOR APPROVAL BY THE ENGINEER. SEE SPECIFICATION SECTION 03200 "CONCRETE REINFORCEMENT" FOR MORE DRAWING REQUIREMENTS.

11. WHERE ONE GRID OF REINFORCING IS REQUIRED IN A WALL OR SLAB, THE GRID SHALL BE CENTERED IN THE ELEMENT, UNLESS OTHERWISE LOCATED IN THE PLANS WITH A CLEAR DISTANCE TO EITHER SIDE OF THE ELEMENT.

12. REINFORCING BARS: BILLET STEEL, DEFORMED BARS TO COMPLY WITH ASTM A615, GRADE 60.

13. WELDABLE REINFORCING BARS: ASTM A706, GRADE 60.

14. WELDED WIRE FABRIC: ASTM A185.

15. TYPICAL REINFORCEMENT FOR ALL 8" CAST-IN-PLACE CONCRETE WALLS SHALL BE # 5 @ 12" C/C EACHWAY, UNLESS OTHERWISE NOTED.

16. TYPICAL REINFORCEMENT FOR ALL 12" CAST-IN-PLACE CONCRETE WALLS SHALL BE # 6 @ 12" C/C EACHWAY, EACH FACE, (EWEF) UNLESS OTHERWISE NOTED.

17. ADDITIONAL REINFORCEMENT IS REQUIRED AT OPENINGS. SEE DETAIL LOCATED ON THE STANDARD DETAIL SHEETS.

18. IF NOT OTHERWISE DETAILED OR NOTED THE ANCHORING OF REINFORCING STEEL TO EXISTING CONCRETE SHALL UTILIZE HILTI HIT-HY 200 INJECTION ADHESIVE AND SHALL HAVE THE FOLLOWING REQUIRED EMBEDMENT:

BAR SIZE	# 3	# 4	# 5	# 6	# 7	# 8
EMBEDMENT	5"	6"	8"	9"	11"	12"

USE AND INSTALLATION ARE TO BE IN ACCORDANCE WITH THE MANUFACTURERS PUBLISHED INSTRUCTIONS.

OTHER ANCHORING SYSTEMS, APPROVED EQUAL BY THE ENGINEER, MAY BE USED BUT THEY SHALL NOT BE USED WITHOUT SUBMITTAL OF APPROPRIATE DOCUMENTATION AND APPROVAL BY THE ENGINEER.

19. PROVIDE BEAM BOX OUTS FOR COMPLETE WIDTH OF BEAM AND THICKNESS OF WALL SUPPORT BELOW UNLESS SPECIFICALLY EXCEPTED.

20. EXPOSED REINFORCING STEEL RESULTING FROM SAW-CUTTING OF EXISTING CONCRETE STRUCTURAL ELEMENTS SHALL BE REPAIRED AS FOLLOWS :
REINFORCING STEEL SHALL BE BURNED BACK 1 INCH FROM THE EXPOSED CONCRETE SURFACE. REINFORCING STEEL SHALL BE COATED WITH A CORROSION INHIBITOR. RESULTING HOLE SHALL BE PATCHED USING GROUT.

21. INTERIOR SLABS-ON-GRADE SHALL BE PLACED ON 6 INCHES OF # 8 STONE. STONE BASE IS TO BE CONTINUOUS UNDER THICKENED SLABS.

22. FOR ALL FINISHED SPACES PROVIDE VAPOR BARRIER BELOW ALL SLAB ON GRADE CONCRETE.

23. CONTROL JOINTS IN SLABS ON GRADE SHALL BE PLACED AS SHOWN ON PLANS. WHERE NOT SHOWN, JOINTS SHALL BE SPACED TO DIVIDE THE SLAB INTO PANELS NOT TO EXCEED 400 SQUARE FEET. JOINTS SHALL BE HAND TOOLED, CAST IN, OR SOFT SAW CUT.

24. IN WALLS, THE HORIZONTAL LENGTH OF PLACEMENT SHALL NOT EXCEED 40 FEET.

25. ALL EXPOSED CORNERS SHALL HAVE 3/4 INCH CHAMFER.

26. NO CALCIUM CHLORIDE SHALL BE USED IN CONCRETE.

27. IF CONTRACTOR DESIRES TO INCREASE SLUMP ABOVE ALLOWABLE LIMITS INDICATED IN THE SPECIFICATION TO FACILITATE PLACEMENT OR PUMPING, THIS SHALL BE DONE UTILIZING AN APPROPRIATE APPROVED ADMIXTURE. NO WATER SHALL BE ADDED AT THE PROJECT SITE WITHOUT THE ENGINEER'S APPROVAL. ALL ADMIXTURES ARE TO BE SUBMITTED WITH THE CONCRETE MIX DESIGN AND ARE TO BE APPROVED PRIOR TO USE. CONCRETE WITH HIGH-RANGE WATER REDUCING ADMIXTURE SHALL HAVE A MAXIMUM SLUMP OF 3 INCHES PRIOR TO ADDING ADMIXTURE. THE CONTRACTOR, IN COLLABORATION WITH THE CONCRETE SUPPLIER, SHALL TAKE APPROPRIATE STEPS TO COMPENSATE FOR THE LOSS OF AIR-ENTRAINMENT DURING PUMPING.

28. WHERE NEW CONCRETE IS DEPOSITED AGAINST CONCRETE THAT IS GREATER THAN 28 DAYS OLD, THOROUGHLY CLEAN EXISTING SURFACE OF LAITANCE AND FOREIGN MATERIAL, AND APPLY BONDING AGENT FOLLOWING RECOMMENDATIONS OF MANUFACTURER.

29. ALL CONCRETE IS REINFORCED UNLESS SPECIFICALLY NOTED AS UNREINFORCED. REINFORCE ALL CONCRETE NOT OTHERWISE SHOWN WITH THE SAME REINFORCING AS IN SIMILAR SECTIONS OR AREAS.

30. MECHANICAL SPLICES, EMBEDDED DOWELS WITH MECHANICAL SPLICES AND DOWEL BAR SUBSTITUTES, SHALL DEVELOP 125% OF THE SPECIFIED YIELD STRENGTH OF THE REINFORCING BAR PER ACI REQUIREMENTS. SPECIFIC USE SHALL BE APPROVED BY ENGINEER.

E. STRUCTURAL STEEL

1. STRUCTURAL STEEL SHALL MEET ASTM A992, GRADE 50, EXCEPT ANGLES AND PLATES SHALL MEET ASTM A36.
S SHAPES SHALL MEET ASTM A572, GRADE 50, Fy = 50 KSI.
HSS SECTIONS SHALL MEET ASTM A500, GRADE B, Fy = 46 KSI.
STEEL PIPE SHALL MEET ASTM A501 OR ASTM A53, GRADE B, Fy = 35 KSI.
HEADED STUDS SHALL MEET ASTM A108 TYPE B, Fu = 65 KSI.
STAINLESS STEEL : TO ASTM A276, TYPE 304, CLASS A
ANCHOR RODS : SHALL CONFORM TO ASTM F1554, GRADE 36.
BOLTS, NUTS, AND WASHERS: TO ASTM A325, A563 AND A436 RESPECTIVELY.
BEVELED WASHERS REQUIRED FOR S BEAMS AND AT OTHER SLOPED CONNECTION SURFACES.

2. WELDING: AWS STANDARDS AND SPECIFICATIONS.

3. GROUT UNDER COLUMN BASE PLATES WITH 1 1/2 INCH MINIMUM NON-SHRINK GROUT, UNLESS OTHERWISE NOTED.

4. ALL METALS TO BE COATED IN ACCORDANCE WITH SPECIFICATION SECTION 09801

F. ALUMINUM

ALUMINUM STRUCTURAL SHAPES AND PLATES SHALL CONFORM TO REQUIREMENTS OF ASTM 6061-T6 ALLOY.

G. MASONRY (f'm = 2000 PSI)

1. COMPRESSIVE STRENGTH OF THE CONCRETE MASONRY UNITS SHALL BE 2,800 PSI MINIMUM. NORMAL WEIGHT HOLLOW LOAD BEARING UNITS CONFORMING TO ASTM C90.

2. MASONRY MORTAR TO ASTM C270, TYPE S.

3. THE 28-DAY COMPRESSIVE STRENGTH OF GROUT SHALL BE 3,000 PSI. DO NOT ADD AIR-ENTRAINING AGENTS OR OTHER ADMIXTURES TO GROUT.

4. MASONRY JOINT REINFORCEMENT: GENERAL TO ASTM A 951.

5. MINIMUM WALL REINFORCEMENT : (UNLESS OTHERWISE NOTED)
2- # 5 HORIZONTAL IN BOND BEAM, CONTINUOUS.
9 GA GALV LADDER - TYPE REINFORCEMENT PLACE IN EVERY OTHER COURSE.
1- # 5 VERTICAL BAR/CELL @ 48" C/C. TYPICAL FOR ALL MASONRY WALLS.
DOWEL TO FOUNDATION AND TERMINATE IN BOND BEAM AT TOP OF WALL.

6. MASONRY REINFORCING LAP SPLICES ARE IN ACCORDANCE WITH TMS 402-11, BASED ON GRADE 60 STEEL REINFORCING AND 2000 PSI COMPRESSIVE STRENGTH OF MASONRY, BUT ARE NOT TO BE LESS THAN THAT NOTED BELOW.

BAR	LAP LENGTH
3	16"
4	16"
5	24"
6	40"

7. PLACE BOND BEAMS BELOW FLOOR AND ROOF DECK, AT TOP OF PARAPET AND AS SHOWN ON DRAWINGS. REINFORCE WITH 2 # 5 BARS, CONTINUOUS.

8. PROVIDE ADDITIONAL VERTICAL WALL REINFORCEMENT AS FOLLOWS : 1- # 5 BAR IN ONE CELL AT EACH CORNER, EACH SIDE OF ALL OPENINGS (DOORS, WINDOWS AND MECHANICAL OPENINGS), AT THE END OF A WALL, ADJACENT TO ALL CONTROL JOINT LOCATIONS, AND AT ALL WALL INTERSECTIONS.

9. PLACE 1 # 5 VERTICAL BAR IN THE FIRST CELL ADJACENT TO ALL MASONRY OPENINGS LESS THAN 6'-0" WIDE. PLACE 1 # 5 VERTICAL BAR, EACH, IN THE FIRST AND SECOND CELL ADJACENT TO MASONRY OPENINGS EQUAL TO OR GREATER THAN 6'-0" WIDE.

10. ALL VERTICAL REINFORCING STEEL TO BE DOWELED TO FOUNDATION AND SHALL TERMINATE IN BOND BEAM AT TOP OF WALL.

11. PLACE BOND BEAMS ABOVE AND BELOW ALL MASONRY OPENINGS. PROVIDE 8" X 8" BOND BEAM REINFORCED WITH 2 # 5 BARS AND EXTEND 25 INCHES BEYOND MASONRY OPENING ON EACH SIDE.

12. BOND BEAMS BELOW ROOF STRUCTURE BEARING ARE CONTINUOUS THROUGH ALL CONTROL JOINTS.

13. PROVIDE BULLNOSE CMU UNITS AT OPENINGS.

I. LINTELS

1. PRECAST BOND BEAM LINTELS ARE NOT PERMITTED.

2. FOR MASONRY OPENINGS LESS THAN OR EQUAL TO 3'-4", USE BOND BEAM WITH 2 # 5 BARS TOP AND BOTTOM WITH 4 X 3 1/2 X 5/16 ANGLE (LLH), A-36 STEEL, UNLESS OTHERWISE NOTED.

3. FOR MASONRY OPENINGS GREATER THAN 3'-4", AND LESS THAN 8'-0", USE W8 X 18 WITH 3/8 " PLATE, SEE DETAIL, UNLESS OTHERWISE DETAILED.

4. FOR MASONRY OPENINGS FROM 8'-0" TO 10'-0", USE W16 X 26 WITH 3/8" PLATE, UNLESS OTHERWISE DETAILED.

5. PROVIDE 8" OF BEARING, EACH END, FOR ALL LINTELS.

6. PROVIDE TWO, 3/4" DIAMETER, GALV ANCHOR RODS, WITH 16" OF EMBEDMENT, FOR EACH END OF ALL WIDE FLANGE STRUCTURAL STEEL LINTELS.

7. GROUT CELLS SOLID BELOW LINTEL BEARINGS, FOR THREE COURSES, IF NOT OTHERWISE PROVIDED.

J. ALUMINUM GRATING

1. GRATING IS TO BE ALUMINUM I BAR GRATING.

2. BEARING BARS: 1 1/2 INCH I BAR SHAPE AND SPACED 15/16" C/C, 15-SGI-4,UNLESS OTHERWISE NOTED.

3. MINIMUM GRATING LIVE LOAD IS 100 PSF.

4. MAXIMUM GRATING DEFLECTION IS NOT TO EXCEED 1/4 INCH.

5. ALL GRATING IS TO BE ANCHORED TO SUPPORTING ELEMENTS.

K. POST INSTALLED ANCHORS

1. ANCHORS ARE TO BE INSTALLED IN ACCORDANCE WITH THE MANUFACTURER'S PUBLISHED INSTRUCTIONS.

2. THE CONTRACTOR SHALL ARRANGE FOR AN ANCHOR MANUFACTURER'S REPRESENTATIVE TO PROVIDE ONSITE INSTALLATION TRAINING FOR ALL ANCHORING PRODUCTS SPECIFIED. THE STRUCTURAL ENGINEER OF RECORD MUST RECEIVE DOCUMENTED CONFIRMATION THAT ALL CONTRACTOR'S PERSONNEL WHO INSTALL ANCHORS ARE TRAINED PRIOR TO THE COMMENCEMENT OF ANCHOR INSTALLATION.

3. EXISTING REINFORCING BARS IN CONCRETE OR MASONRY MAY CONFLICT WITH ANCHOR LOCATIONS. UNLESS NOTED ON THE DRAWINGS THAT THE REINFORCING CAN BE CUT, THE CONTRACTOR SHALL REVIEW THE EXISTING STRUCTURAL DRAWINGS AND SHALL LOCATE EXISTING REINFORCING BARS IN THE AREA OF THE CONCRETE ANCHORS BY FERROSCAN, GPR, X-RAY OR OTHER MEANS. RELOCATION OF ANCHOR SHALL ONLY BE WITH THE APPROVAL OF THE ENGINEER OF RECORD.

4. BASE PRODUCT INFORMATION
a. CONCRETE: HILTI HIT-HY 200 INJECTION ADHESIVE
b. MASONRY: HILTI HIT-HY 270 INJECTION ADHESIVE
c. ANCHOR FOR CONCRETE AND MASONRY: HILTI HAS-R316 SS ANCHOR
d. EXPANSION ANCHOR: HILTI KB-TZ STAINLESS STEEL

5. ALTERNATE PRODUCTS WITH EQUAL OR GREATER CAPACITY WITH SIMILAR INSTALLATION LIMITATIONS AS THE BASE PRODUCT MAY BE SUBMITTED TO THE ENGINEER OF RECORD FOR REVIEW AS A SUBSTITUTION REQUEST. ALTERNATE PRODUCTS SHALL HAVE ICC ES REPORT SHOWING THAT THE PRODUCTS HAVE BEEN TESTED TO RESIST STATIC, WIND AND SEISMIC TENSION AND SHEAR LOADS IN CRACKED AND UNCRACKED NORMAL WEIGHT CONCRETE IN ACCORDNACE WITH ACI 318-11, APPENDIX D.

"For Viewing Purposes Only - Visit wesslerengineering.com to Purchase"

SCALE VERIFICATION	DRAWN BY	TWS
BAR IS ONE INCH LONG ON ORIGINAL DRAWING	CHECKED BY	JRB
	APPROVED BY	JRB
	ISSUE DATE	MARCH 2020
	PROJECT NUMBER	193216-04-001

NO.	DATE	INITIALS	REVISION DESCRIPTIONS

JEFFREY ROSS BALLARD REGISTERED No. 60860191 STATE OF INDIANA PROFESSIONAL ENGINEER 03/04/2020

WESSLER ENGINEERING
More than a Project™

WASTEWATER SYSTEM EXPANSION
CITY OF FRANKFORT, INDIANA
CONTRACT A - WASTEWATER TREATMENT PLANT

STRUCTURAL GENERAL NOTES

SHEET NO. **1S1**

PAGE NO. 10

Drawing: J:\Frankfort\Projects\193216 Frankfort WWTP Exp\CAD 04-001\DWG\Sheets\Area 1 - Gem\1G-GS.dwg | Layout: STRUCTURAL GENERAL NOTES | Plotted: 03/04/20 @ 11:56:20 | LastSavedBy: MikeN

NOTE: ALL SYMBOL DESCRIPTIONS ARE SUBJECT TO MODIFICATION ON THE DRAWINGS. ALL SYMBOLS NOT NECESSARILY USED ON THIS PROJECT.

VALVES & FITTINGS:

- GATE VALVE
- BALL VALVE
- BUTTERFLY VALVE
- CHECK VALVE
- GLOBE VALVE
- BALANCING VALVE
- PLUG VALVE
- CONTROL VALVE
- SOLENOID VALVE
- NEEDLE VALVE
- THERMAL EXPANSION VALVE
- AUTOMATIC FLOW CONTROL VALVE
- BACK FLOW PREVENTER
- PRESSURE REDUCING, SELF CONTAINED VALVE
- PRESSURE REDUCING, PILOT OPERATED VALVE
- RELIEF, PILOT OPERATED VALVE
- ANGLE GLOBE VALVE
- PRESSURE RELIEF, ANGLE TYPE VALVE
- THREE WAY BALL VALVE
- THREE WAY GLOBE VALVE
- THREE WAY PLUG VALVE
- THREE WAY CONTROL VALVE
- PIPE TURN 90°
- LINE BREAK
- PIPE ELBOW UP (RISER)
- PIPE ELBOW DOWN
- PIPE TEE DOWN
- CAP OR PLUG
- REDUCER, CONCENTRIC
- REDUCER, ECCENTRIC
- Y-STRAINER
- FLEXIBLE CONNECTION
- FLANGES
- UNION
- PIPE GUIDE
- PIPE ANCHOR
- FILTER (INLINE)
- GAUGE
- THERMOMETER
- STEAM TRAP
- PRESSURE SENSOR
- INLINE PUMP

TERMINAL BOXES

SINGLE-DUCT TERMINAL BOX (WITH REHEAT COIL)

- SEE SCHEDULE FOR RUNOUT SIZE
- TYPE OF TERMINAL BOX
- VAV-1
- CONTROL PANEL
- MAINTAIN CODE REQUIRED CLEARANCE IN FRONT OF CONTROL PANEL

GENERAL SYMBOLS:

- POINT OF CONNECTION
- POINT OF REMOVAL
- PLAN NOTE
- DEMOLITION NOTE
- REVISION
- DETAIL BUBBLE (A / M501)
- SECTION BUBBLE (1 / M501)

PIPING DESIGNATIONS:

- NEW PIPING
- EXISTING PIPING TO REMAIN
- EXISTING PIPING TO BE REMOVED
- SANITARY
- SANITARY VENT
- POTABLE COLD WATER
- POTABLE HOT WATER (TEMPERATURE AS NOTED)
- HOT WATER RETURN
- PIPE SLOPES IN DIRECTION OF ARROW

DIFFUSERS & REGISTERS

SUPPLY DIFFUSER:

- SHADING INDICATES BLANKED-OFF QUADRANT OF DIFFUSION PATTERN
- SEE SCHEDULE FOR RUNOUT SIZE
- DIFFUSER TYPE
- DIFFUSER SIZE
- SD-4 / 750 — DIFFUSER CFM

SUPPLY DIFFUSER:

- SHADING INDICATES BLANKED-OFF QUADRANT OF DIFFUSION PATTERN
- SEE SCHEDULE FOR RUNOUT SIZE
- DIFFUSER TYPE
- DIFFUSER SIZE
- SD-4 / 750 — DIFFUSER CFM

RETURN/EXHAUST GRILLE:

- SEE SCHEDULE FOR RUNOUT SIZE
- GRILLE TYPE
- GRILLE SIZE
- RG-3 / 750 — GRILLE CFM

RETURN/EXHAUST GRILLE:

- SEE SCHEDULE FOR RUNOUT SIZE
- GRILLE TYPE
- GRILLE SIZE
- RG-3 / 750 — GRILLE CFM

LINEAR BAR & SLOT DIFFUSER:

- ARROW INDICATES DIRECTION OF AIR FLOW
- SEE SCHEDULE FOR RUNOUT SIZE
- DIFFUSER TYPE
- DIFFUSER SIZE
- LD-6 / 220 — DIFFUSER CFM

LINEAR BAR & SLOT DIFFUSER:

- ARROW INDICATES DIRECTION OF AIR FLOW
- SEE SCHEDULE FOR RUNOUT SIZE
- DIFFUSER TYPE
- DIFFUSER SIZE
- LD-6 / 220 — DIFFUSER CFM

DUCTWORK:

- SUPPLY ARROW
- RETURN/EXHAUST ARROW
- THERMOSTAT
- HUMIDISTAT
- SENSOR
- SUPPLY UP
- SUPPLY DOWN
- RETURN/EXHAUST UP
- RETURN/EXHAUST DOWN
- ROUND UP
- ROUND DOWN
- FLAT OVAL SUPPLY UP
- FLAT OVAL SUPPLY DOWN
- 16x12 — RECTANGULAR DUCT WIDTH x HEIGHT
- 16"Ø — ROUND DUCT DIAMETER
- 16x12Ø — FLAT OVAL DUCT WIDTH x HEIGHT
- EXISTING DUCT
- 90° MITERED ELBOW WITH TURNING VANES
- w, (r=w), r — ELBOW
- DUCT END CAP
- 15° MAX — DUCT TRANSITION - SLOPED BOTH SIDES
- 15° MAX — DUCT TRANSITION - FLAT ON ONE SIDE
- FLEXIBLE DUCT
- VOLUME DAMPER
- FD — FIRE DAMPER
- M — MOTORIZED DAMPER
- BDD — BACKDRAFT DAMPER
- AD — ACCESS DOOR

DUCTWORK:

SINGLE LINE REPRESENTATION:

- SUPPLY UP
- SUPPLY DOWN
- RETURN/EXHAUST UP
- RETURN/EXHAUST DOWN
- ROUND UP
- ROUND DOWN
- OVAL SUPPLY UP
- OVAL SUPPLY DOWN
- 16x12 — RECTANGULAR DUCT WIDTH x HEIGHT
- 16"Ø — ROUND DUCT DIAMETER
- 16x12Ø — FLAT OVAL DUCT WIDTH x HEIGHT
- EXISTING DUCT
- DUCT TURN 90°
- DUCT END CAP
- DUCT TRANSITION - SLOPED ON BOTH SIDES
- DUCT TRANSITION - FLAT ON ONE SIDE
- FLEXIBLE DUCT
- VOLUME BALANCE DAMPER
- FD — FIRE DAMPER
- M — MOTORIZED DAMPER
- BDD — BACKDRAFT DAMPER

MECHANICAL ABBREVIATIONS:

ADA	AMERICANS WITH DISABILITIES ACT
AFF	ABOVE FINISHED FLOOR
AFG	ABOVE FINISHED GRADE
AHU	AIR HANDLING UNIT
AD	ACCESS DOOR
BDD	BACK DRAFT DAMPER
BHP	BRAKE HORSEPOWER
BLDG	BUILDING
BOD	BOTTOM OF DUCT
BOS	BOTTOM OF STEEL
BTU	BRITISH THERMAL UNIT
CA	COMPRESSED AIR
CD	CONDENSATE DRAIN
CHWR	CHILLED WATER RETURN
CHWS	CHILLED WATER SUPPLY
CO	CLEANOUT
CR	CONDENSATE RETURN
CS	CAST SINK
CSS	CLINIC SERVICE SINK
CW	DOMESTIC COLD WATER
DB	DRY BULB
DCV	DOUBLE CHECK VALVE
DIA	DIAMETER
DN	DOWN
DWH	DOMESTIC WATER HEATER
EES	EMERGENCY EYE AND SHOWER WASH
EEW	EMERGENCY EYE WASH
EF	EXHAUST FAN
EG	EXHAUST GRILLE
EL	ELEVATION
ES	EMERGENCY SHOWER
EXIST	EXISTING
GL	GLYCOL
FCU	FAN COIL UNIT
FD	FIRE DAMPER OR FLOOR DRAIN
FDC	FIRE DEPARTMENT CONNECTION
FLA	FULL LOAD AMPS
FOB	FLAT ON BOTTOM
FOT	FLAT ON TOP
HB	HOSE BIBB
HKSP	HOUSEKEEPING
HPR	HIGH PRESSURE STEAM RETURN
HPS	HIGH PRESSURE STEAM SUPPLY
HW	DOMESTIC HOT WATER
HWR	DOMESTIC HOT WATER RETURN
HWRP	HOT WATER RECIRCULATION PUMP
HHWR	HEATING HOT WATER RETURN
HHWS	HEATING HOT WATER SUPPLY
IE	INVERT ELEVATION
JS	JANITOR SINK
JT	JOINT
LAV	LAVATORY
LPR	LOW PRESSURE STEAM RETURN
LPS	LOW PRESSURE STEAM SUPPLY
MB	MOP BASIN
MF	MIXING FAUCET
MPR	MEDIUM PRESSURE STEAM RETURN
MPS	MEDIUM PRESSURE STEAM SUPPLY
NC	NORMALLY CLOSED
NO	NORMALLY OPEN
PIV	POST INDICATING VALVE
PRV	PRESSURE RELIEF VALVE
PSIA	POUNDS PER SQUARE INCH ABSOLUTE
PSIG	POUNDS PER SQUARE INCH GAUGE
RF	RETURN FAN
RG	RETURN GRILLE
RO	REVERSE OSMOSIS
RPBP	REDUCED PRESSURE BACKFLOW PREVENTER
SAN	SANITARY
SD	SUPPLY DIFFUSER
SF	SUPPLY FAN
SG	SUPPLY GRILLE
SH	SHOWER
SI	SEDIMENT INTERCEPTOR
SK	SINK
STM	STEAM
TD	TRENCH DRAIN
TMV	THERMOSTATIC MIXING VALVE
TSP	TOTAL STATIC PRESSURE
V	SANITARY VENT
VD	VOLUME DAMPER
VFD	VARIABLE FREQUENCY DRIVE
VTR	VENT THROUGH ROOF
WB	WET BULB
WC	WATER CLOSET
WH	WALL HYDRANT

GENERAL NOTES:

1. ALL WORK MUST COMPLY WITH CURRENT MECHANICAL CODE.
2. FACILITY IS TO REMAIN OPERATIONAL AND ACCESSIBLE DURING CONSTRUCTION. COORDINATE ALL WORK ACTIVITIES WITH OWNER'S DESIGNATED REPRESENTATIVE.
3. REPORT DISCREPANCIES BETWEEN DRAWINGS AND EXISTING CONDITIONS TO ENGINEER PRIOR TO FABRICATING DUCTWORK, PIPING, OR MECHANICAL ASSEMBLIES.
4. PROPERLY SUSPEND ALL EQUIPMENT, DUCTWORK, PIPING, DEVICES, ETC FROM STRUCTURE. REFER TO STRUCTURAL DRAWINGS FOR ADDITIONAL INFORMATION.
5. CONTRACTOR SHALL COORDINATE WITH ALL TRADES TO INSTALL AND MAINTAIN SYSTEMS WITH CLEARANCE FOR SERVICE AND MAINTENANCE.
6. CONTRACTOR SHALL FOLLOW ALL OF THE OWNER'S SAFETY PROTOCOLS AND GUIDELINES.
7. CONTRACTOR IS RESPONSIBLE FOR ALL CUTTING AND PATCHING OF FLOORS, WALLS, AND CEILINGS. PATCH ALL AREAS WHERE DEVICES HAVE BEEN REMOVED AND ANY NEW OPENINGS TO MATCH EXISTING SURFACES.
8. UNLESS SPECIFICALLY NOTED, CONTRACTOR SHALL FURNISH ALL TOOLS, MATERIALS, AND EQUIPMENT NECESSARY TO COMPLETE THE CONTRACT. CONTRACTOR SHALL NOT USE OWNER'S EQUIPMENT OR TOOLS INCLUDING LADDERS, SCAFFOLDS, LIFTS, ETC. UNLESS SPECIFICALLY COORDINATED WITH OWNER'S DESIGNATED REPRESENTATIVE.
9. CONTRACTOR SHALL COORDINATE STORAGE, LAYDOWN AREAS, AND WORKING AREAS WITH OWNER'S DESIGNATED REPRESENTATIVE TO AVOID IMPEDING THE OWNER'S ACTIVITIES.
10. REPORT ANY MAINTENANCE CONCERNS TO OWNER AND ENGINEER.
11. NEW EQUIPMENT SHALL REMAIN THE RESPONSIBILITY OF THE CONTRACTOR UNTIL SUBSTANTIAL COMPLETION. CONTRACTOR SHALL MAINTAIN EQUIPMENT IN GOOD WORKING ORDER THROUGHOUT CONSTRUCTION. FILTERS, STRAINERS, ETC. SHALL BE THE RESPONSIBILITY OF THE CONTRACTOR DURING THIS PERIOD. EQUIPMENT SHALL BE TURNED OVER TO OWNER IN LIKE NEW, CLEAN, FULLY FUNCTIONAL CONDITION WITH NEW OR CLEANED FILTERS, STRAINERS, ETC. ATTIC STOCK MATERIALS SHALL BE PROVIDED TO OWNER AT PROJECT TURNOVER.
12. CONTRACTOR'S WORK IN ACTIVE AREAS TO BE KEPT CLEAN AND SWEPT UP ON A DAILY BASIS. WORK THAT INHIBITS THE OWNER FROM NORMAL WORK ACTIVITIES TO BE COORDINATED WITH OWNER IN ADVANCE.

Applied Engineering Services
5975 Castle Creek Parkway N Drive, Suite 300 • Indianapolis, Indiana 46250
Tel: 317.810.4141 • Fax: 317.810.4140 • www.applied-e-s.com

SCALE VERIFICATION	DRAWN BY	DaM
BAR IS ONE INCH LONG ON ORIGINAL DRAWING	CHECKED BY	DTM
	APPROVED BY	DTM
	ISSUE DATE	FEBRUARY 2020
	PROJECT NUMBER	193216-04-001

NO.	DATE	INITIALS	REVISION DESCRIPTIONS

DANIEL THOMAS MILES · REGISTERED · No. PE10302029 · STATE OF INDIANA · PROFESSIONAL ENGINEER · 02/28/2020

WESSLER ENGINEERING
More than a Project™

WASTEWATER SYSTEM EXPANSION

CITY OF FRANKFORT, INDIANA
CONTRACT A - WASTEWATER TREATMENT PLANT

MECHANICAL SYMBOLS AND ABBREVIATIONS

SHEET NO. **1M1**

PAGE NO. 11

Drawing: G:\Projects\19-141 Wessler - City of Frankfort WWTP Expansion HVAC Design\Cadd\19-141-1M1.dwg | Layout: Layout1 | Plotted: 02/24/20 @ 05:12:04 | LastSavedBy: dmarshall

LIGHTING

- SURFACE/PENDANT MOUNTED LED 1X4 FIXTURE LETTER DENOTES TYPE, # DENOTES CIRCUIT, SHADING DENOTES EMERGENCY AND/OR NIGHT LIGHT
- RECESS MOUNTED LED 2X2 FIXTURE LETTER DENOTES TYPE, # DENOTED CIRCUIT, SHADING DENOTES EMERGENCY AND/OR NIGHT LIGHT
- RECESS MOUNTED LED 1X2 FIXTURE LETTER DENOTES TYPE, # DENOTES CIRCUIT, SHADING DENOTES EMERGENCY AND/OR NIGHT LIGHT
- WALL MOUNTED LED FIXTURE, LETTER DENOTES TYPE, # DENOTES CIRCUIT
- WALL MOUNTED PHOTOCELL
- CEILING MOUNTED EXIT SIGN
- WALL MOUNTED EXIT SIGN
- EMERGENCY LIGHT FIXTURE # DENOTES CIRCUIT

RECEPTACLE

- DUPLEX RECEPTACLE SUBSCRIPT DENOTES TYPE: UPS DENOTES UNINTERRUPTIBLE POWER SUPPLY # DENOTES CIRCUIT
- MULTI-OUTLET RECEPTACLE SINGLE
- MULTI-OUTLET RECEPTACLE DUPLEX
- 240 VOLT RECEPTACLE

PANELS AND BOXES

- JB — JUNCTION BOX
- PB — PULL BOX
- PANEL

HVAC AND FIRE ALARM

- HORN/LIGHT DEVICE
- SMOKE DETECTOR SUBSCRIPT DENOTES TYPE:
  - Z DENOTES IONIZATION
  - P DENOTES PHOTOELECTRIC
  - T DENOTES THERMAL
- THERMOSTAT
- AMBIENT TEMPERATURE TRANSMITTER
- UNIT HEATER
- WALL MOUNTED GAS DETECTION FIXTURE

SWITCHES

- WALL SWITCH SUBSCRIPT DENOTES TYPE: NO SUBSCRIPT DENOTES SINGLE POLE
  - 3 DENOTES 3 WAY — M DENOTES MANUAL
  - 4 DENOTES 4 WAY — MOTOR STARTER
- MOTOR STARTER
- COMBINATION MOTOR STARTER
- DISCONNECT SWITCH
- FUSED DISCONNECT SWITCH
- DOOR LIMIT SWITCH
- LOCAL CONTROL STATION

WIRING

- CONDUIT HOME RUN
- CONDUIT EXPOSED
- CONDUIT CONCEALED
- FLEXIBLE CONDUIT

SCHEMATICS

- 3-POSITION SELECTOR SWITCH HAND - OFF - AUTO
- PUSHBUTTON SWITCH N.O. TEXT DENOTES LEGEND PLATE
- PUSHBUTTON SWITCH N.C. TEXT DENOTES LEGEND PLATE
- MUSHROOM HEAD EMERGENCY STOP PUSHBUTTON SWITCH N.C. MAINTAINED TEXT DENOTES LEGEND PLATE
- PUSHBUTTON SWITCH N.C. WITH LOCK-OUT TEXT DENOTES LEGEND PLATE
- DISCONNECT SWITCH N.O.
- DISCONNECT SWITCH N.C.
- TEMPERATURE SWITCH OR THERMOSTAT N.O. TEXT DENOTES TAG NUMBER
- TEMPERATURE SWITCH OR THERMOSTAT N.C. TEXT DENOTES TAG NUMBER
- PRESSURE SWITCH N.O. TEXT DENOTES TAG NUMBER
- PRESSURE SWITCH N.C. TEXT DENOTES TAG NUMBER
- LEVEL SWITCH N.O. TEXT DENOTES TAG NUMBER
- LEVEL SWITCH N.C. TEXT DENOTES TAG NUMBER
- ON DELAY TIMED SWITCH N.O.T.C. TEXT DENOTES TAG NUMBER
- ON DELAY TIMED SWITCH N.C.T.O. TEXT DENOTES TAG NUMBER
- OFF DELAY TIMED SWITCH N.O.T.O. TEXT DENOTES TAG NUMBER
- OFF DELAY TIMED SWITCH N.C.T.C. TEXT DENOTES TAG NUMBER
- TORQUE SWITCH TEXT DENOTES TAG NUMBER
- LIMIT SWITCH TEXT DENOTES TAG NUMBER
- CONTACT (NORMALLY OPEN) # DENOTES COIL NUMBER
- CONTACT (NORMALLY CLOSED) # DENOTES COIL NUMBER
- INDICATOR LIGHT - LETTER DENOTES COLOR
- PUSH-TO-TEST INDICATOR LIGHT LETTER DENOTES COLOR
- ELAPSED TIME METER
- SOLENOID VALVE
- COIL
  - M DENOTES MOTOR STARTER
  - CR DENOTES CONTROL RELAY
  - TR DENOTES TIME DELAY RELAY
  - LC DENOTES LIGHTING CONTACTOR
  - PR DENOTES INTERPOSING PILOT RELAY
  - XXX DENOTES REFERENCE LINE NUMBER

SINGLE LINE

- EXISTING TO REMAIN
- EXISTING TO BE DEMOLISHED
- NEW
- FUTURE
- TRANSFORMER (TX-STRUCTURE DESIGNATION, XXX kVA, 480-120/208V; 3P/4W TYPE OF TRANSFORMER)
- FUSE (100 A)
- MOLDED CASE CIRCUIT BREAKER (XXA)
- THERMAL OVERLOAD RELAY
- GROUND
- CURRENT TRANSFORMER NUMBER DENOTES QUANTITY (600:5A (3))
- POTENTIAL TRANSFORMER NUMBER DENOTES QUANTITY (480-120V (3))
- AUTOMATIC OR MANUAL TRANSFER SWITCH (800A 3Ø 3W ATS)
- MOTOR NUMBER DENOTES HORSEPOWER (25)
- GENERATOR XX NUMBER DENOTES REQUIRED kW RATING AND VOLTAGE (XXkW 480V,3Ø,4W)
- COMBINATION POWER UNIT (LP-#)
- VARIABLE FREQUENCY DRIVE (VFD)

SITE DUCTBANKS

- UGC — UNDERGROUND CONTROL
- UGE — UNDERGROUND ELECTRICAL
- UGF — UNDERGROUND FIBER

MISC PLAN VIEW SYMBOLS

- EQUIPMENT CONNECTION
- GROUND ROD
- INSTRUMENT TRANSMITTER

COMMUNICATIONS

- TELEPHONE OR NETWORK DROP
- ETHERNET JACK

ABBREVIATIONS

A	AMPERE(S)	MAU	MAKEUP AIR UNIT
AE	ANALYTICAL SENSOR	MCC	MOTOR CONTROL CENTER
AF	ABOVE FINISHED FLOOR	MH	MANHOLE
AHU	AIR HANDLING UNIT	MOL	MOTOR OPERATED LOUVER
AIT	ANALYTICAL INDICATOR TRANSMITTER	N	NEUTRAL
AM	AMMETER	N/A	NOT APPLICABLE
AMP	AMPERE(S)	N.C.	NORMALLY CLOSED
ATS	AUTOMATIC TRANSFER SWITCH	NEC	NATIONAL ELECTRICAL CODE
AWG	AMERICAN WIRE GAUGE	NF	NON-FUSED
BKR	BREAKER	N.O.	NORMALLY CLOSED
BLDG	BUILDING	NTS	NOT TO SCALE
C	CONDUIT	OL	OVERLOAD
CB	CIRCUIT BREAKER	PB	PUSHBUTTON
CKT	CIRCUIT	PLC	PROGRAMMABLE LOGIC CONTROLLER
CR	CORROSION RESISTANT	PM	POWER METER/MONITOR
CU	COPPER	PNL	PANEL
DISC	DISCONNECT	RCPT	RECEPTACLE
EF	EXHAUST FAN	RGS	RIGID GALVANIZED STEEL
ELEV	ELEVATION	R/S	RING SWITCH
EMT	ELECTRICAL METALLIC TUBING	SF	SUPPLY FAN
EQUIP	EQUIPMENT	SHLD	SHIELDED
EWC	ELECTRICAL WATER COOLER	SP	SINGLE POLE
EXP	EXPLOSION PROOF	SPD	SURGE PROTECTIVE DEVICE
F	FUSED OR FUSE	SST	STAINLESS STEEL
FE	FLOW SENSOR	STR	STARTER
FIT	FLOW INDICATOR TRANSMITTER	SW	SWITCH
FLA	FULL LOAD AMPS	SWBD	SWITCHBOARD
G	GROUND	SWGR	SWITCHGEAR
GF	GROUND FAULT	TB	TERMINAL BOX
GFI	GROUND FAULT INTERRUPTER	TPS	TWISTED PAIR SHIELDED
HOA	HAND-OFF-AUTOMATIC	TYP	TYPICAL
HOR	HAND-OFF-REMOTE	UGE	UNDERGROUND ELECTRICAL
HP	HORSEPOWER	UGT	UNDERGROUND SIGNAL
HPS	HIGH PRESSURE SODIUM	UH	UNIT HEATER
JB	JUNCTION BOX	UL	UNDERWRITERS LABORATORIES
KV	KILOVOLTS	UNO	UNLESS NOTED OTHERWISE
KVA	KILOVOLTS AMPS	V	VOLTS
KVAR	KILOVAR	VFD	VARIABLE FREQUENCY DRIVE
KW	KILOWATTS	VM	VOLTMETER
LCP	LOCAL CONTROL PANEL	VS	VOLTMETER SWITCH
LE	LEVEL SENSOR	W	WIRE/WATT
LIT	LEVEL INDICATING TRANSMITTER	WH	WATER HEATER
LOR	LOCAL-OFF-REMOTE	WP	WEATHERPROOF
LTG	LIGHTING	XFMR	TRANSFORMER

GENERAL NOTES: WWTP

1. UNLESS SPECIFICALLY NOTED OTHERWISE, ALL UNDERGROUND ELECTRICAL CONDUITS SHALL BE PER STANDARD DETAILS..
2. UNLESS OTHERWISE SPECIFIED OR NOTED, ALL WALL MOUNTED ELECTRICAL PANELS, ENCLOSURES, AND SIMILAR EQUIPMENT SHALL BE MOUNTED 6'-6" (MAX) FROM THE TOP OF THE PANEL TO FINISHED FLOOR OR GRADE.
3. UNLESS OTHERWISE NOTED, ALL LIGHTING SWITCHES, CONTROL SWITCHES, AND SIMILAR EQUIPMENT SHALL BE MOUNTED WITH THEIR CENTERLINE APPROXIMATELY 4'-0" ABOVE FINISHED FLOOR, SLAB, OR GRADE. THERMOSTATS SHALL BE MOUNTED 4'-4" ABOVE FINISHED FLOOR.
4. A SEPARATE EQUIPMENT GROUNDING CONDUCTOR SHALL BE PROVIDED FOR EACH CIRCUIT (SEPARATE CONDUCTOR IN THE CONDUIT). THE CONDUCTOR SHALL BE TERMINATED AT THE PROPER DEVICE, TERMINAL OR LUG AT THE POWER SOURCE (MCC GROUND BUS, PANELBOARD GROUND BUS, ETC.). GROUND CONDUCTOR SIZE SHALL BE PER THE LATEST EDITION OF THE NEC.
5. ELECTRICAL SYSTEMS INSTALLED IN HAZARDOUS LOCATIONS SHALL BE CONSTRUCTED IN ACCORDANCE WITH CHAPTER 5, ART. 500 OF THE LATEST EDITION OF THE NEC. CONTRACTOR SHALL SEAL ALL CONDUITS LEAVING HAZARDOUS AREA. WALL AND FLOOR OPENINGS SHALL BE SEALED WITH FIREPROOF COMPOUND.
6. ALL EQUIPMENT LOCATED IN HAZARDOUS AREAS SHALL BE SUITABLE FOR THE CLASS, DIVISION, AND GROUP RATING OF THE LOCATION.
7. UNLESS SPECIFICALLY NOTED OTHERWISE, EXISTING PAVEMENT SHALL BE SAW CUT AND REMOVED TO ALLOW FOR THE INSTALLATION OF NEW ELECTRICAL DUCTBANKS. AFTER INSTALLATION, REPLACE PAVEMENT WITH NEW TO MATCH ORIGINAL CONDITIONS.

"For Viewing Purposes Only - Visit wesslerengineering.com to Purchase"

SCALE VERIFICATION	DRAWN BY	EAS
BAR IS ONE INCH LONG ON ORIGINAL DRAWING	CHECKED BY	RMS
	APPROVED BY	WCM
	ISSUE DATE	MARCH 2020
	PROJECT NUMBER	193216-04-001

NO.	DATE	INITIALS	REVISION DESCRIPTIONS

WAYNE C. MOORE REGISTERED No. 10707476 STATE OF INDIANA PROFESSIONAL ENGINEER 03/04/2020

WESSLER ENGINEERING
More than a Project™

WASTEWATER SYSTEM EXPANSION

CITY OF FRANKFORT, INDIANA
CONTRACT A - WASTEWATER TREATMENT PLANT

ELECTRICAL SYMBOLS AND ABBREVIATIONS

SHEET NO. **1E1**

PAGE NO. 12

Drawing: J:\Frankfort\Projects\193216 Frankfort WWTP Exp\CAD 04-001\DWGS\Sheets\Area 1 - Gen\1E EL-L-GND.dwg | Layout: 1E1 | Plotted: 03/05/20 @ 10:15:55 | LastSavedBy: MikeN

VALVE SYMBOLS

- ECCENTRIC PLUG
- THREE - WAY
- BUTTERFLY
- BALL
- GLOBE
- PRESSURE RELIEF
- AIR RELEASE AND VACUUM RELIEF
- GATE
- KNIFE GATE
- CONSTANT VOLUME FLOW REGULATOR
- MUD
- BALL CHECK
- SWING CHECK
- SPLIT DISC CHECK
- REGULATED SIDE PRESSURE CONTROL
- PINCH
- DIAPHRAGM
- NEEDLE
- CALIBRATED BALANCE
- SOLENOID

GATE SYMBOLS

- SLUICE GATE
- SLIDE GATE
- FLAP GATE
- WEIR GATE
- STOP GATE
- WEIR AND STOP GATE

VALVE AND GATE POWER ACTUATOR SYMBOLS

- ELECTRIC MOTOR
- HYDRAULIC WITH SOLENOID
- ELECTRIC MOTOR WITH POSITIONER
- PNEUMATIC WITH POSITIONER
- HYDRAULIC WITH POSITIONER
- PNEUMATIC WITH SOLENOID

XX: FC = FAIL CLOSED
FIP = FAIL INTERMEDIATE POSITION
FIP = FAIL TO LAST POSITION
FO = FAIL OPEN

NOTE: XX = FAIL POSITION ON LOSS OF PRIMARY POWER (PNEUMATIC OR ELECTRICAL)

FLOW ELEMENTS SYMBOLS

- WEIR PLATE
- PARSHALL FLUME
- ROTAMETER
- PROPELLER OR TURBINE METER
- ORIFICE METER
- CLAMP ON ULTRASONIC FLOWMETER
- MAGNETIC FLOWMETER
- VENTURI OR FLOW TUBE
- AREA VELOCITY FLOWMETER

MISCELLANEOUS SYMBOLS

- HARDWIRED INTERLOCK SEE SPECIFICATION
- MICROPROCESSOR BASED INTERLOCK SEE SPECIFICATION
- BLIND FLANGE OR CLEAN OUT
- AIR GAP
- STRAINER
- FLUSHING WATER CONNECTION
- SEAL WATER CONNECTION
- EJECTOR
- AUTOMATIC SAMPLER
- DIFFUSER
- BUBBLER LEVEL ELEMENT
- VENT
- RUPTURE DISK
- ORTHO PHOSPHATE ELEMENT
- PROBE
- ELECTRIC MOTOR
- MANUAL SAMPLE PORT
- AUTOMATIC DRAIN
- MANUAL DRIP TRAP
- DIAPHRAGM SEAL
- ANNULAR SEAL
- FLOW STRAIGHTENING VANE
- CALIBRATION CHAMBER
- DENSITY METER X: N - NUCLEAR O - OPTICAL U - ULTRASONIC
- SELF CONTAINED AIR SUPPLY
- PURGE SET X: W = WATER A = AIR
- SUBMERSIBLE MIXER
- AIR COMPRESSOR
- FLOATING MIXER
- FLAME TRAP AND THERMAL SHUTOFF ASSEMBLY
- FLOATING DECANTER
- TEMPERATURE GAUGE
- PRESSURE GAUGE GAUGE
- PRESSURE TRANSMITTER
- LEVEL SWITCH/FLOAT

LEVEL ELEMENTS SYMBOLS

- SUBMERSIBLE PRESSURE
- ULTRASONIC
- FLOAT
- NON-CONTACT RADAR
- CAPACITANCE FLOAT STICK

PUMP AND COMPRESSOR SYMBOLS

- SUBMERSIBLE PUMP
- CENTRIFUGAL BLOWER
- CENTRIFUGAL PUMP (DRY PIT)
- VERTICAL TURBINE PUMP
- PROGRESSING CAVITY PUMP
- LOBE PUMP, BLOWER OR COMPRESSOR (POSITIVE DISPLACEMENT)
- COMPRESSOR (PISTON)
- CHEMICAL FEED PUMP
- PLUNGER PUMP
- DIAPHRAGM PUMP
- PERISTALTIC PUMP

FLOW STREAM IDENTIFIERS

SEE PROCESS – MECHANICAL LEGEND

INPUTS AND OUTPUTS TO PLC OR DISTRIBUTED CONTROL

- ANALOG INPUT
- ANALOG OUTPUT
- PULSE INPUT
- PULSE OUTPUT
- DIGITAL INPUT
- DIGITAL OUTPUT

NOTE:
X = TOTAL NUMBER OF SIGNALS WHERE MORE THAN ONE SIGNAL IS REQUIRED. IF QUANTITY IS NOT SHOWN THEN ONE SIGNAL IS REQUIRED.

GENERAL NOTE:

1. THIS IS A STANDARD LEGEND. NOT ALL THE INFORMATION SHOWN ON THIS LEGEND IS USED IN THESE CONTRACT DRAWINGS.

"For Viewing Purposes Only - Visit wesslerengineering.com to Purchase"

SCALE VERIFICATION	DRAWN BY	EAC
BAR IS ONE INCH LONG ON ORIGINAL DRAWING	CHECKED BY	MS
	APPROVED BY	WCM
	ISSUE DATE	MARCH 2020
	PROJECT NUMBER	193216-04-001

NO.	DATE	INITIALS	REVISION DESCRIPTIONS

WAYNE C. MOORE REGISTERED No. 10707476 STATE OF INDIANA PROFESSIONAL ENGINEER 03/04/2020

WESSLER ENGINEERING
More than a Project™

WASTEWATER SYSTEM EXPANSION
CITY OF FRANKFORT, INDIANA
CONTRACT A - WASTEWATER TREATMENT PLANT

P&ID LEGEND

SHEET NO. **I1**

PAGE NO. 13

Drawing: J:\Frankfort\Projects\193216 Frankfort WWTP Exp\CAD 04-001DWG\Sheets\Area 1 - Gen1E EL-LGND.dwg | Layout: I11 | Plotted: 03/04/20 @ 04:45:00 | LastSavedBy: MikeN

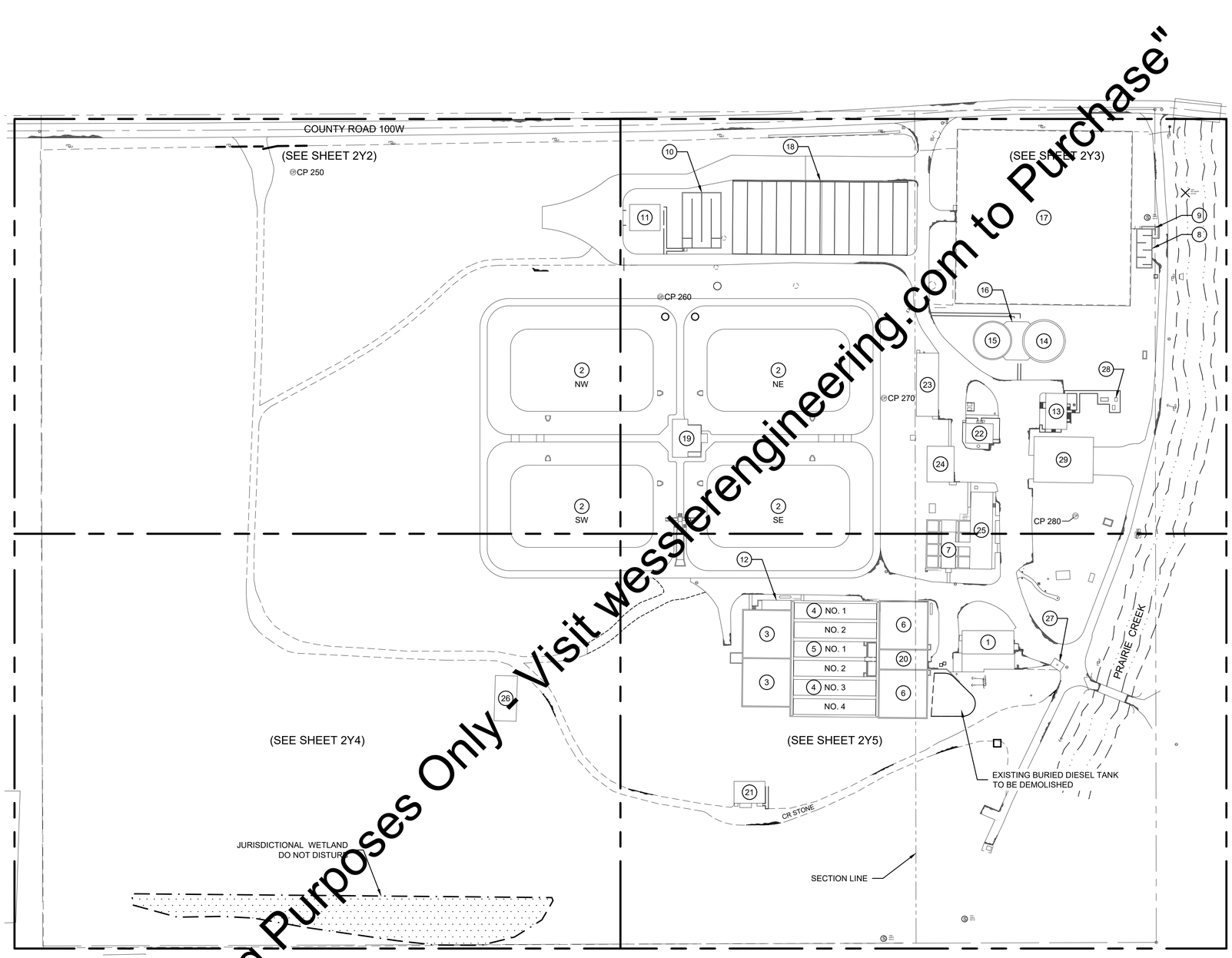

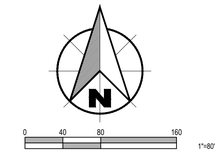

KEY NOTES

1 HEADWORKS STRUCTURE
2 FLOW EQUALIZATION LAGOONS
3 PRIMARY SETTLING TANKS
4 AERATION BASINS
5 AEROBIC DIGESTER
6 SECONDARY CLARIFIER
7 FILTER BUILDING
8 CHLORINE CONTACT TANK
9 DECHLORINATION TANK
10 OVERFLOW DISINFECTION
11 DISINFECTION BUILDING
12 PRIMARY SLUDGE PUMP ROOM
13 SLUDGE PROCESS BUILDING
14 PRIMARY ANAEROBIC DIGESTER
15 SECONDARY ANAEROBIC DIGESTER
16 DIGESTER CONTROL BUILDING
17 COVERED SLUDGE DRYING BEDS
18 UNCOVERED SLUDGE DRYING BEDS
19 LAGOON CONTROL BUILDING
20 AERATION BUILDING
21 CHEMICAL FEED BUILDING
22 OPERATORS BUILDING
23 UTILITY BUILDING
24 GARAGE
25 ADMINISTRATION BUILDING
26 STORAGE
27 SEPTIC TANK UNLOADING FACILITY
28 WASTE GAS BURNER
29 GARAGE

NOTES:

1. ALL ELEVATION INFORMATION SHOWN ON THESE PLANS, INCLUDING BENCH MARK ELEVATIONS, IS BASED ON NGVD 1929 DATUM.
2. ALL EXISTING STRUCTURES HAVE BEEN SHOWN PER THE 1978 WWTP IMPROVEMENTS PROJECT, PREPARED BY CLYDE E. WILLIAMS AND ASSOCIATES, INC. AND THE 2010 WASTEWATER TREATMENT PLANT IMPROVEMENTS PROJECT, PREPARED BY WESSLER ENGINEERING.
3. ALL EXISTING UNDERGROUND WASTEWATER TREATMENT PROCESS PIPING HAS BEEN SHOWN PER THE 1978 WASTEWATER TREATMENT PLANT IMPROVEMENTS PROJECT, PREPARED BY CLYDE E. WILLIAMS AND ASSOCIATES, INC. AND THE 2010 WASTEWATER TREATMENT PLANT IMPROVEMENTS PROJECT, PREPARED BY WESSLER ENGINEERING. ITS LOCATION HAS NOT BEEN FIELD VERIFIED AND ACCURACY IS UNCERTAIN.
4. ALL EXISTING UNDERGROUND NON POTABLE WATER PIPING, WITH SIZES, HAS BEEN SHOWN PER THE 1978 WASTEWATER TREATMENT PLANT IMPROVEMENTS PROJECT, PREPARED BY CLYDE E. WILLIAMS AND ASSOCIATES, INC. AND THE 2010 WASTEWATER TREATMENT PLANT IMPROVEMENTS PROJECT, PREPARED BY WESSLER ENGINEERING. ITS LOCATION HAS NOT BEEN FIELD VERIFIED, AND ITS ACCURACY IS UNCERTAIN.

"For Vewing Purposes Only - Visit wesslerengineering.com to Purchase"

SCALE VERIFICATION	DRAWN BY	DLC
BAR IS ONE INCH LONG ON ORIGINAL DRAWING	CHECKED BY	KLT
	APPROVED BY	RWH
	ISSUE DATE	MARCH 2020
	PROJECT NUMBER	193216-04-001

NO.	DATE	INITIALS	REVISION DESCRIPTIONS

ROBERT W. HOLDEN II REGISTERED No. 10000096 STATE OF INDIANA PROFESSIONAL ENGINEER 03/04/2020

WESSLER ENGINEERING
More than a Project™

WASTEWATER SYSTEM EXPANSION

CITY OF FRANKFORT, INDIANA
CONTRACT A - WASTEWATER TREATMENT PLANT

EXISTING OVERALL SITE PLAN

SHEET NO. **2Y1**

PAGE NO. 14

Drawing: J:\Frankfort\Projects\193216 Frankfort WWTP Exp\CAD 04-001\DWG\Sheets\Area 2 - Site\2Y - EX-SI.dwg | Layout: 2Y1 - EXISTING OVERALL SITE PLAN | Plotted: 02/28/20 @ 10:30:02 | LastSavedBy: Jonathanl.

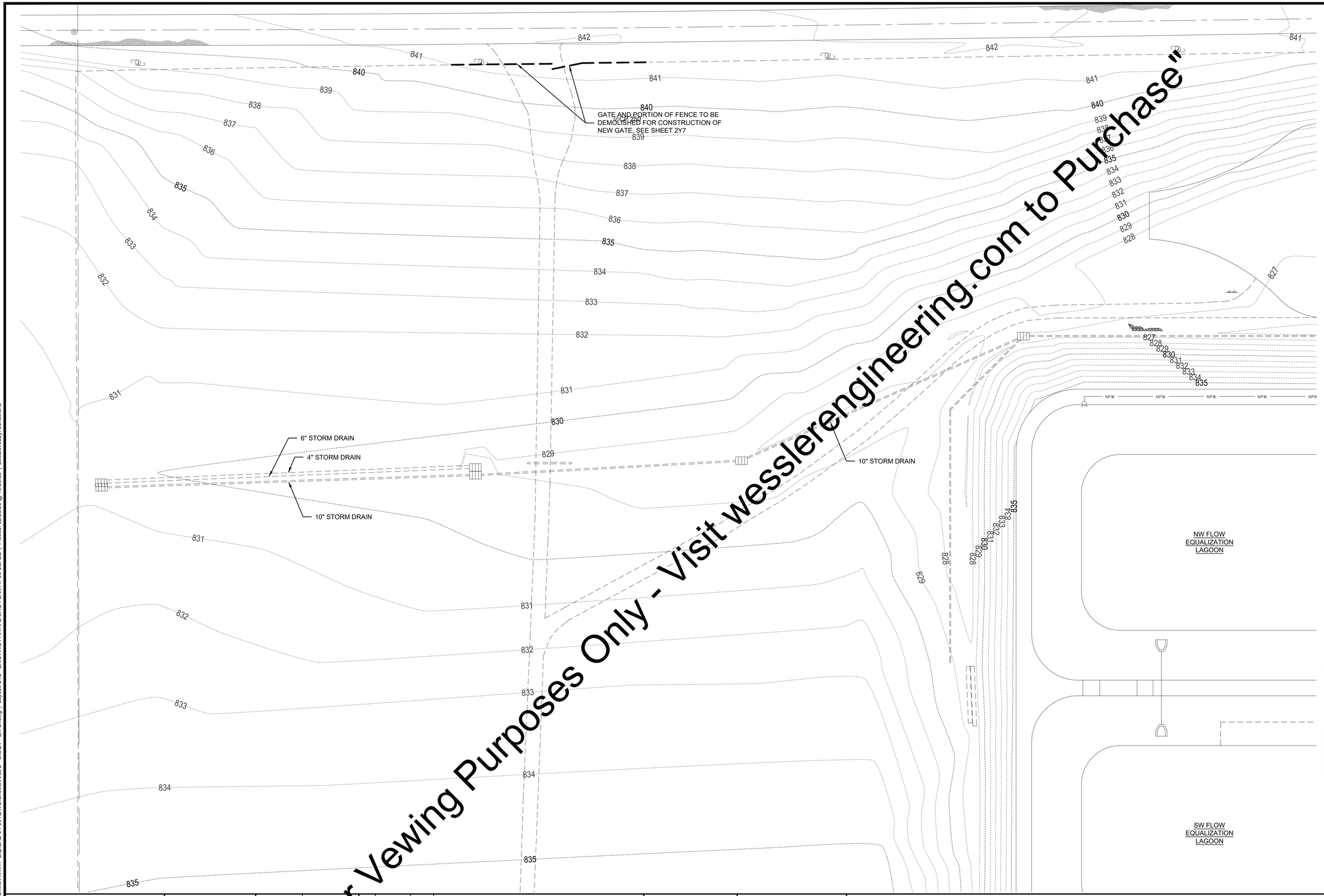

"For Vewing Purposes Only - Visit wesslerengineering.com to Purchase"

LEGEND

EXISTING FEATURES

EXISTING FEATURES TO BE DEMOLISHED

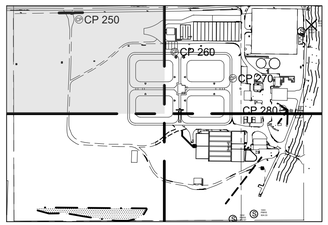

SITE KEY PLAN

SCALE: NONE

SCALE VERIFICATION	DRAWN BY	DLT
BAR IS ONE INCH LONG ON ORIGINAL DRAWING	CHECKED BY	ALT
	APPROVED BY	RWH
	ISSUE DATE	MARCH 2020
	PROJECT NUMBER	193216-04-001

NO.	DATE	INITIALS	REVISION DESCRIPTIONS

ROBERT W. HOLDEN REGISTERED No. 10000096 STATE OF INDIANA PROFESSIONAL ENGINEER 03/04/2020

WESSLER ENGINEERING
More than a Project™

WASTEWATER SYSTEM EXPANSION

CITY OF FRANKFORT, INDIANA
CONTRACT A - WASTEWATER TREATMENT PLANT

EXISTING PARTIAL SITE PLAN - NW

SHEET NO.
2Y2

PAGE NO.
15

Drawing: J:\Frankfort\Projects\193216 Frankfort WWTP Exp\CAD 04-001\DWG\Sheets\Area 2 - Site\2Y - EX-SI.dwg | Layout: 2Y2 - EXISTING PARTIAL SITE PLAN AT 30 SCALE | Plotted: 02/28/20 @ 10:30:03 | LastSavedBy: JonathanL

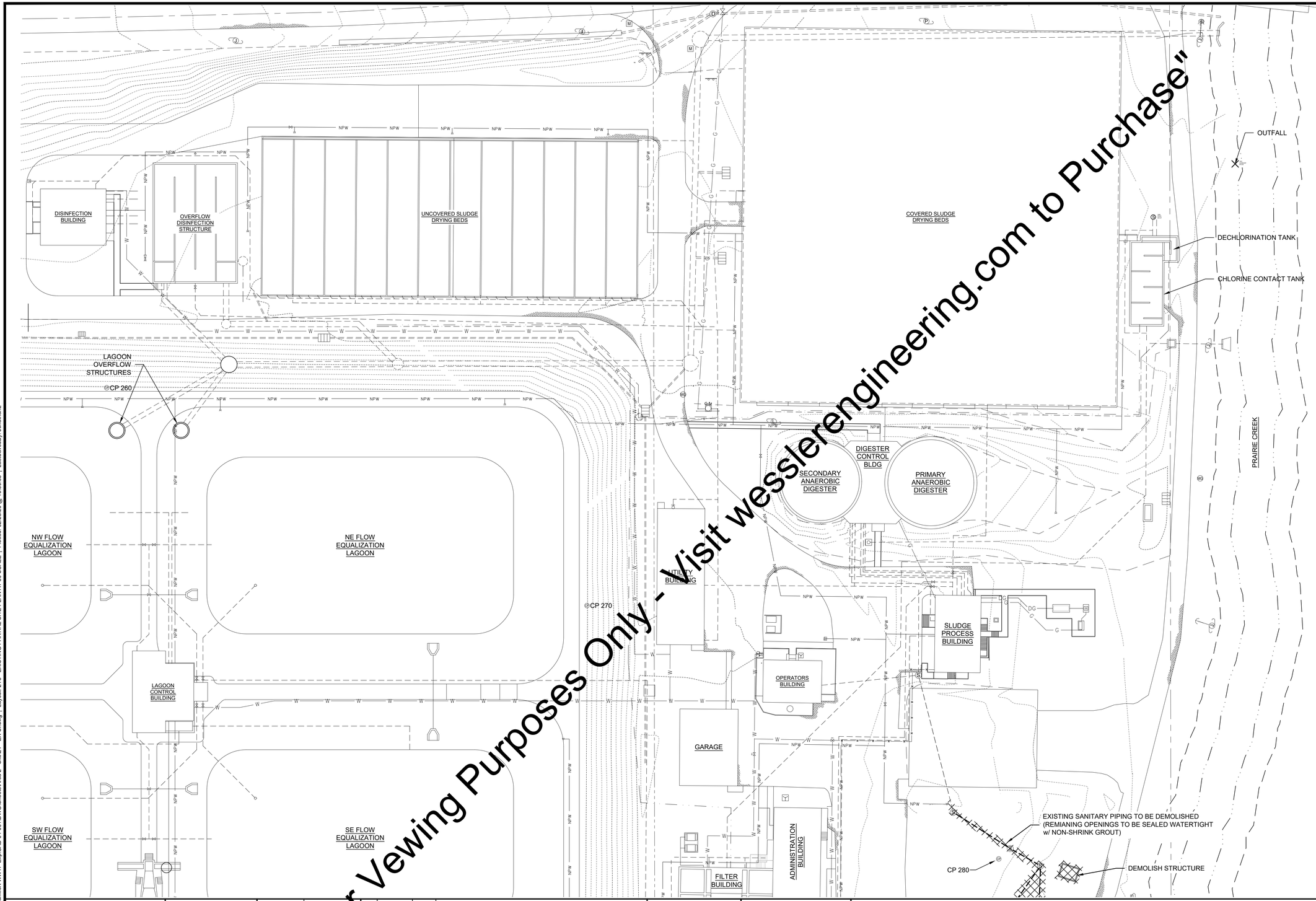

"For Viewing Purposes Only - Visit wesslerengineering.com to Purchase"

LEGEND

EXISTING FEATURES

EXISTING FEATURES TO BE DEMOLISHED

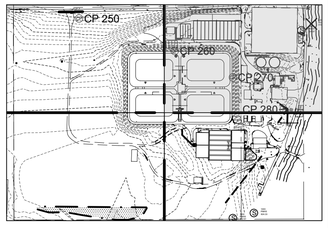

SITE KEY PLAN
SCALE: NONE

SCALE VERIFICATION	DRAWN BY	DLC
BAR IS ONE INCH LONG ON ORIGINAL DRAWING	CHECKED BY	KLT
	APPROVED BY	RWH
	ISSUE DATE	MARCH 2020
	PROJECT NUMBER	193216-04-001

NO.	DATE	INITIALS	REVISION DESCRIPTIONS

ROBERT W. HOLDEN II REGISTERED No. 10000096 STATE OF INDIANA PROFESSIONAL ENGINEER 03/04/2020

WESSLER ENGINEERING
More than a Project™

WASTEWATER SYSTEM EXPANSION

CITY OF FRANKFORT, INDIANA
CONTRACT A - WASTEWATER TREATMENT PLANT

EXISTING PARTIAL SITE PLAN - NE

SHEET NO.
2Y3

PAGE NO.
16

Drawing: J:\Frankfort\Projects\193216 Frankfort WWTP Exp\CAD 04-001\DWG\Sheets\Area 2 - Site\2Y - EX-SI.dwg | Layout: 2Y3 - EXISTING PARTIAL SITE PLAN AT 30 SCALE | Plotted: 02/28/20 @ 10:30:05 | LastSavedBy: JonathanL

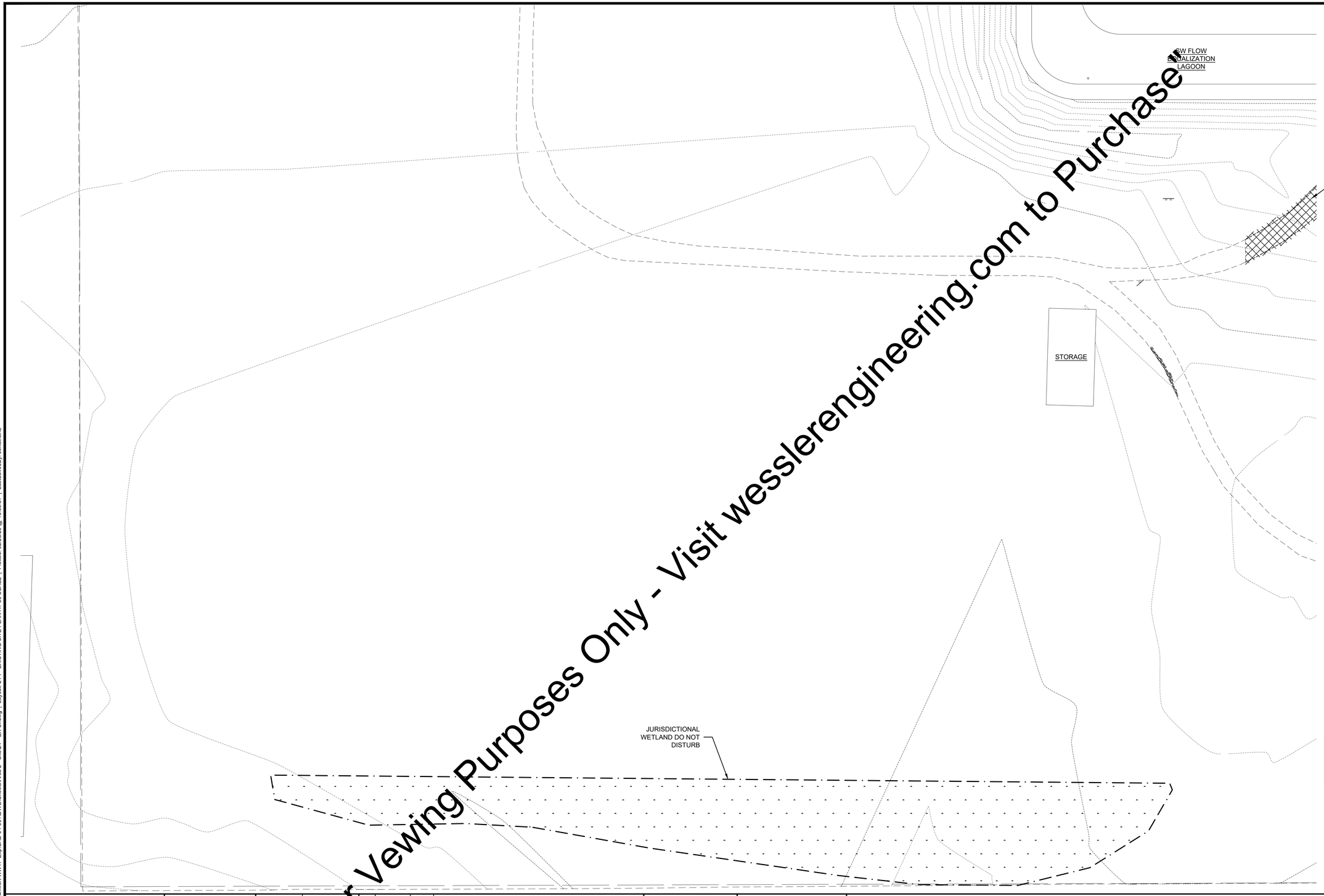

For Vewing Purposes Only - Visit wesslerengineering.com to Purchase

LEGEND

EXISTING FEATURES

EXISTING FEATURES TO BE DEMOLISHED

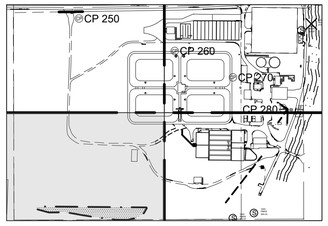

SITE KEY PLAN

SCALE: NONE

SCALE VERIFICATION	DRAWN BY	DLC
BAR IS ONE INCH LONG ON ORIGINAL DRAWING	CHECKED BY	KLT
	APPROVED BY	RWH
	ISSUE DATE	MARCH 2020
	PROJECT NUMBER	193216-04-001

NO.	DATE	INITIALS	REVISION DESCRIPTIONS

ROBERT W. HOLDEN II REGISTERED No. 10000096 STATE OF INDIANA PROFESSIONAL ENGINEER 03/04/2020

WESSLER ENGINEERING

More than a Project™

WASTEWATER SYSTEM EXPANSION

CITY OF FRANKFORT, INDIANA

CONTRACT A - WASTEWATER TREATMENT PLANT

EXISTING PARTIAL SITE PLAN - SW

SHEET NO.

2Y4

PAGE NO.

17

Drawing: J:\Frankfort\Projects\193216 Frankfort WWTP Exp\CAD 04-001\DWG\Sheets\Area 2 - Site\2Y - EX-SI.dwg | Layout: 2Y4 - EXISTING SITE PLAN AT 30 SCALE | Plotted: 02/28/20 @ 10:30:07 | LastSavedBy: JonathanL

SW EQUALIZATION LAGOON

SE EQUALIZATION LAGOON

FILTER BUILDING

ADMINISTRATION BUILDING

EXISTING SANITARY PIPING TO BE DEMOLISHED (REMIANING OPENINGS TO BE SEALED WATERTIGHT w/ NON-SHRINK GROUT)

NORTH PRIMARY SETTLING TANK

SOUTH PRIMARY SETTLING TANK

AERATION TANK NO. 1

AERATION TANK NO. 2

NORTH AEROBIC DIGESTER

SOUTH AEROBIC DIGESTER

AERATION TANK NO. 3

AERATION TANK NO. 4

NORTH SECONDARY CLARIFIER

AERATION BUILDING

SOUTH SECONDARY CLARIFIER

HEADWORKS STRUCTURE

DEMOLISH PORTION OF 18" LAGOON EFFLUENT

DEMOLISH 14" PIPE TO FACE OF STRUCTURE AND SEAL REMAINING OPENING WATERTIGHT w/ CONCRETE GROUT

AREA OF EXISTING BURIED DIESEL TANK (EXACT LOCATION UNKNOWN) TO BE DEMOLISHED

DEMOLISH 8" PVC SEWER AND SEAL OPENING AT MAHOLE WATERTIGHT

CHEMICAL FEED BUILDING

CR STONE

EXISTING FIRE DEPARTMENT TRAINING MANHOLE TO BE RELOCATED ON SITE. SEE SHEET 2Y9

"For Viewing Purposes Only - Visit wesslerengineering.com to Purchase"

N

0 15 30 60

1"=30'

LEGEND

EXISTING FEATURES

EXISTING FEATURES TO BE DEMOLISHED

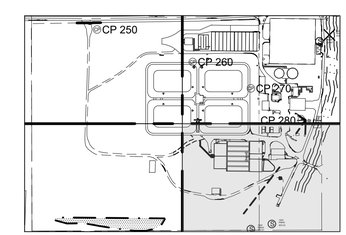

SITE KEY PLAN

SCALE: NONE

SCALE VERIFICATION	DRAWN BY	DLT
BAR IS ONE INCH LONG ON ORIGINAL DRAWING	CHECKED BY	ALT
	APPROVED BY	RWH
	ISSUE DATE	MARCH 2020
	PROJECT NUMBER	193216-04-001

NO.	DATE	INITIALS	REVISION DESCRIPTIONS

ROBERT W. HOLDEN II REGISTERED No. 10000096 STATE OF INDIANA PROFESSIONAL ENGINEER 03/04/2020

WESSLER ENGINEERING

More than a Project™

WASTEWATER SYSTEM EXPANSION

CITY OF FRANKFORT, INDIANA

CONTRACT A - WASTEWATER TREATMENT PLANT

EXISTING PARTIAL SITE PLAN - SE

SHEET NO. **2Y5**

PAGE NO. 18

Drawing: J:\Frankfort\Projects\193216 Frankfort WWTP Exp\CAD 04-001\DWG\Sheets\Area 2 - Site\2Y - EX-SI.dwg | Layout: 2Y5 - EXISTING PARTIAL SITE PLAN AT 30 SCALE | Plotted: 02/28/20 @ 10:30:08 | LastSavedBy: JonathanL

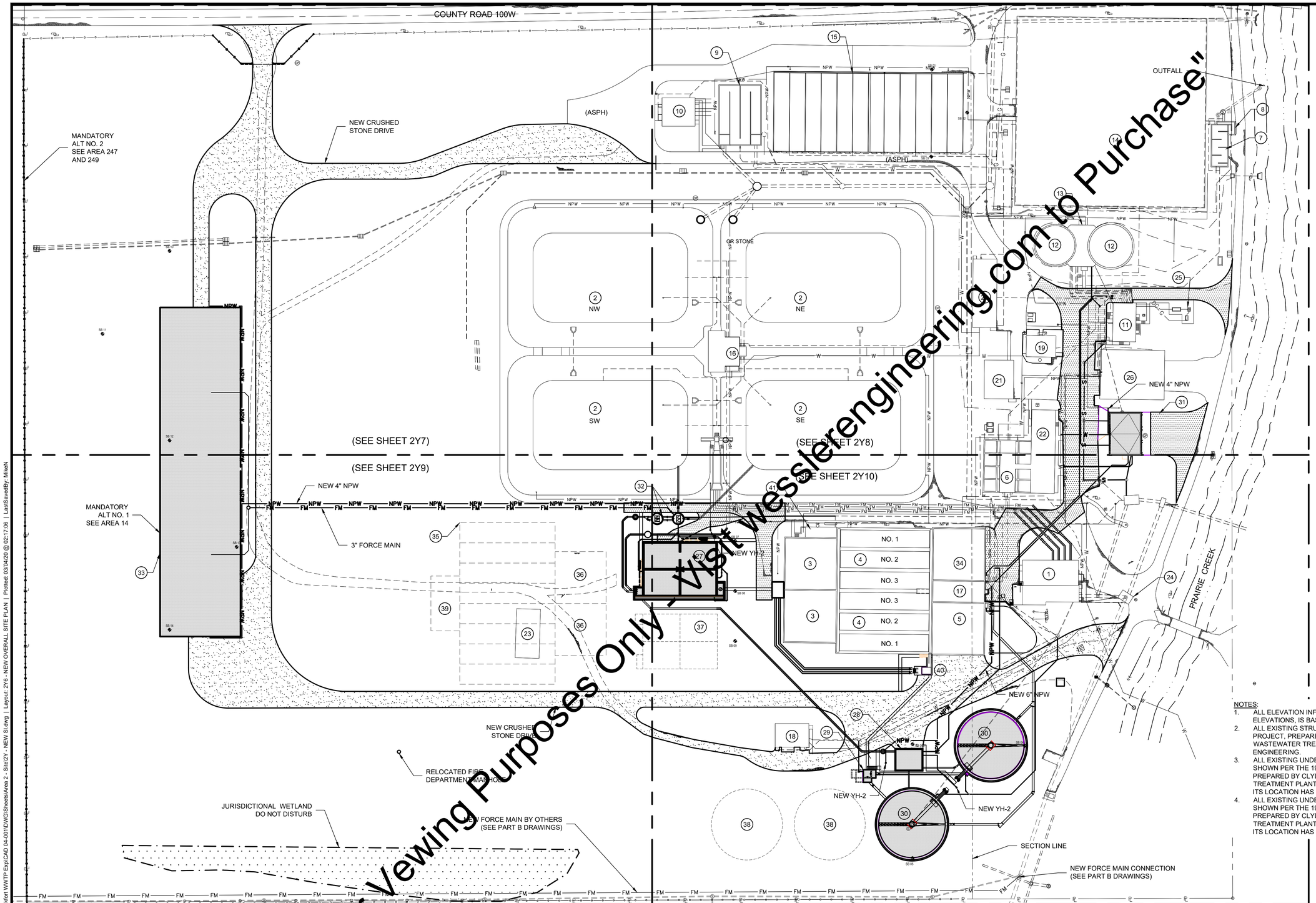

"For Viewing Purposes Only - Visit wesslerengineering.com to Purchase"

KEY NOTES

1 HEADWORKS STRUCTURE
2 FLOW EQUALIZATION LAGOONS
3 ANOXIC BASINS
4 AERATION BASINS
5 WAS HOLDING TANK
6 FILTER BUILDING
7 CHLORINE CONTACT TANK
8 DECHLORINATION BASIN
9 OVERFLOW DISINFECTION STRUCTURE
10 DISINFECTION BUILDING
11 SLUDGE PROCESS BUILDING
12 ANAEROBIC DIGESTER
13 DIGESTER CONTROL BUILDING
14 COVERED SLUDGE DRYING BEDS
15 UNCOVERED SLUDGE DRYING BEDS
16 LAGOON CONTROL BUILDING
17 AERATION BUILDING
18 CHEMICAL FEED BUILDING
19 OPERATORS BUILDING
20 UTILITY BUILDING
21 GARAGE
22 ADMINISTRATION BUILDING
23 STORAGE
24 SEPTIC TANK UNLOADING FACILITY
25 WASTE GAS BURNER
26 GARAGE
27 NEW ANAEROBIC BASIN
28 NEW SECONDARY CONTROL BUILDING
29 NEW SECONDARY CLARIFIER SPLITTER BOX
30 NEW SECONDARY CLARIFIER
31 NEW THICKENING AND DEWATERING BUILDING
32 NEW CONTROLLED RATE PUMP STATION
33 NEW LONG TERM BIOSOLIDS STORAGE BUILDING
34 DIGESTED SLUDGE HOLDING TANK
35 FUTURE AERATION BASIN
36 FUTURE ANOXIC BASIN
37 FUTURE ANAEROBIC BASIN
38 FUTURE SECONDARY CLARIFIER
39 FUTURE BLOWER BUILDING
40 NEW RECYCLE PUMP BUILDING
41 BNR ELECTRICAL ROOM

LEGEND

EXISTING FEATURES
NEW FEATURES
NEW STRUCTURES
FUTURE STRUCTURES
NEW ASPHALT DRIVE
NEW CRUSHED STONE DRIVE
EXISTING SITE PIPING
NEW SITE PIPING

NOTES:

1. ALL ELEVATION INFORMATION SHOWN ON THESE PLANS, INCLUDING BENCH MARK ELEVATIONS, IS BASED ON NGVD 1929 DATUM.
2. ALL EXISTING STRUCTURES HAVE BEEN SHOWN PER THE 1978 WWTP IMPROVEMENTS PROJECT, PREPARED BY CLYDE E. WILLIAMS AND ASSOCIATES, INC. AND THE 2010 WASTEWATER TREATMENT PLANT IMPROVEMENTS PROJECT, PREPARED BY WESSLER ENGINEERING.
3. ALL EXISTING UNDERGROUND WASTEWATER TREATMENT PROCESS PIPING HAS BEEN SHOWN PER THE 1978 WASTEWATER TREATMENT PLANT IMPROVEMENTS PROJECT, PREPARED BY CLYDE E. WILLIAMS AND ASSOCIATES, INC. AND THE 2010 WASTEWATER TREATMENT PLANT IMPROVEMENTS PROJECT, PREPARED BY WESSLER ENGINEERING. ITS LOCATION HAS NOT BEEN FIELD VERIFIED AND ACCURACY IS UNCERTAIN.
4. ALL EXISTING UNDERGROUND NON POTABLE WATER PIPING, WITH SIZES, HAS BEEN SHOWN PER THE 1978 WASTEWATER TREATMENT PLANT IMPROVEMENTS PROJECT, PREPARED BY CLYDE E. WILLIAMS AND ASSOCIATES, INC. AND THE 2010 WASTEWATER TREATMENT PLANT IMPROVEMENTS PROJECT, PREPARED BY WESSLER ENGINEERING. ITS LOCATION HAS NOT BEEN FIELD VERIFIED, AND ITS ACCURACY IS UNCERTAIN.

SCALE VERIFICATION	DRAWN BY	DLT/MLN
BAR IS ONE INCH LONG ON ORIGINAL DRAWING	CHECKED BY	MLT
	APPROVED BY	RWH
	ISSUE DATE	MARCH 2020
	PROJECT NUMBER	193216-04-001

NO.	DATE	INITIALS	REVISION DESCRIPTIONS

ROBERT W. HOLDEN REGISTERED No. 10000096 STATE OF INDIANA PROFESSIONAL ENGINEER 03/04/2020

WESSLER ENGINEERING
More than a Project™

WASTEWATER SYSTEM EXPANSION

CITY OF FRANKFORT, INDIANA
CONTRACT A - WASTEWATER TREATMENT PLANT

NEW OVERALL SITE PLAN

SHEET NO. 2Y6

PAGE NO. 19

Drawing: J:\Frankfort\Projects\193216 Frankfort WWTP Exp\CAD 04-001\DWG\Sheets\Area 2 - Site\2Y - NEW SI.dwg | Layout: 2Y6 - NEW OVERALL SITE PLAN | Plotted: 03/04/20 @ 02:17:06 | LastSavedBy: MikeN

MATCH EXISTING
MATCH EXISTING
N: 1840629.3
E: 3112591.8
N: 1840592.3
E: 3112499.4
N: 1840592.3
E: 3112554.7
N: 1840627.6
E: 3112464.0
N: 1840623.5
E: 3112224.0
N: 1840592.1
E: 3112589.6
N: 1840576.9
E: 3112414.6
N: 1840590.7
E: 3112464.6
R50'
R50'
R100'
N: 1840590.7
E: 3112514.6
25'
N: 1840592.1
E: 3112539.6
N: 1840576.9
E: 3112514.6
28' DOUBLE SLIDING GATE
N: 1840515.6
E: 3112589.6
N: 1840515.6
E: 3112539.6
R50'
NEW CHAIN
LINK FENCE
MANDATORY
ALT NO. 2
(ADDITIVE)
N: 1840494.6
E: 3112471.5
N: 1840514.6
E: 3112865.2
N: 1840509.0
E: 3112830.1
MATCH EXISTING
N: 1840472.7
E: 3112734.7
NEW CRUSHED STONE DRIVE
51'
N: 1840465.6
E: 3112699.8
N: 1840433.0
E: 3112514.2
N: 1840465.6
E: 3112589.6
20'
R75'
N: 1840445.6
E: 3112699.8
N: 1840465.2
E: 3112799.6
N: 1840433.0
E: 3112439.2
N: 1840445.6
E: 3112617.5
N: 1840449.6
E: 3112714.4
20'
R30'
6" STORM DRAIN
4" STORM DRAIN
N: 1840397.2
E: 3112488.8
R75'
10" STORM DRAIN
SB 10
N: 1840370.6
E: 3112613.4
10" STORM DRAIN
N: 1840370.6
E: 3112538.4
EXISTING STONE DRIVE TO REMAIN
N: 1840283.0
E: 3112439.2
N: 1840283.0
E: 3112499.2
N: 1840283.0
E: 3112397.2
NPW
NPW
SB 11
NEW LONG TERM
BIOSOLIDS STORAGE
(AREA 14)
McN
McN
McN
McN
McN
McN
6" PVC PLANT
DRAIN
20'
SB 12
N: 1840096.0
E: 3112225.3
NPW
NPW
NPW
NPW
4"
NW FLOW
EQUALIZATION
LAGOON
(AREA 4)
20" DI LAGOON
EQUALIZATION
12" DI LAGOON
EFFLUENT
SW FLOW
EQUALIZATION
LAGOON
(AREA 4)

N
0 15 30 60
1"=30'

LEGEND

- EXISTING FEATURES
- NEW FEATURES
- NEW STRUCTURES
- FUTURE STRUCTURES
- NEW ASPHALT DRIVE
- NEW CRUSHED STONE DRIVE
- EXISTING SITE PIPING
- NEW SITE PIPING

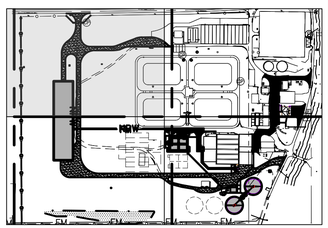

SITE KEY PLAN
SCALE: NONE

"For Viewing Purposes Only - Visit wesslerengineering.com to Purchase"

Drawing: J:\Frankfort\Projects\193216 Frankfort WWTP Exp\CAD 04-001\DWG\Sheets\Area 2 - Site\2Y - NEW SI.dwg | Layout: 2Y7 - NEW PARTIAL SITE PLAN | Plotted: 02/28/20 @ 10:31:02 | LastSavedBy: JasonW

SCALE VERIFICATION	DRAWN BY	DLT/MLT
BAR IS ONE INCH LONG ON ORIGINAL DRAWING	CHECKED BY	DLT
	APPROVED BY	RWH
	ISSUE DATE	MARCH 2020
	PROJECT NUMBER	193216-04-001

NO.	DATE	INITIALS	REVISION DESCRIPTIONS

ROBERT W. HOLDEN II
REGISTERED
No. 10000096
STATE OF INDIANA
PROFESSIONAL ENGINEER
03/04/2020

WESSLER ENGINEERING
More than a Project™

WASTEWATER SYSTEM EXPANSION
CITY OF FRANKFORT, INDIANA
CONTRACT A - WASTEWATER TREATMENT PLANT

NEW PARTIAL SITE PLAN - NW

SHEET NO.
2Y7
PAGE NO.
20

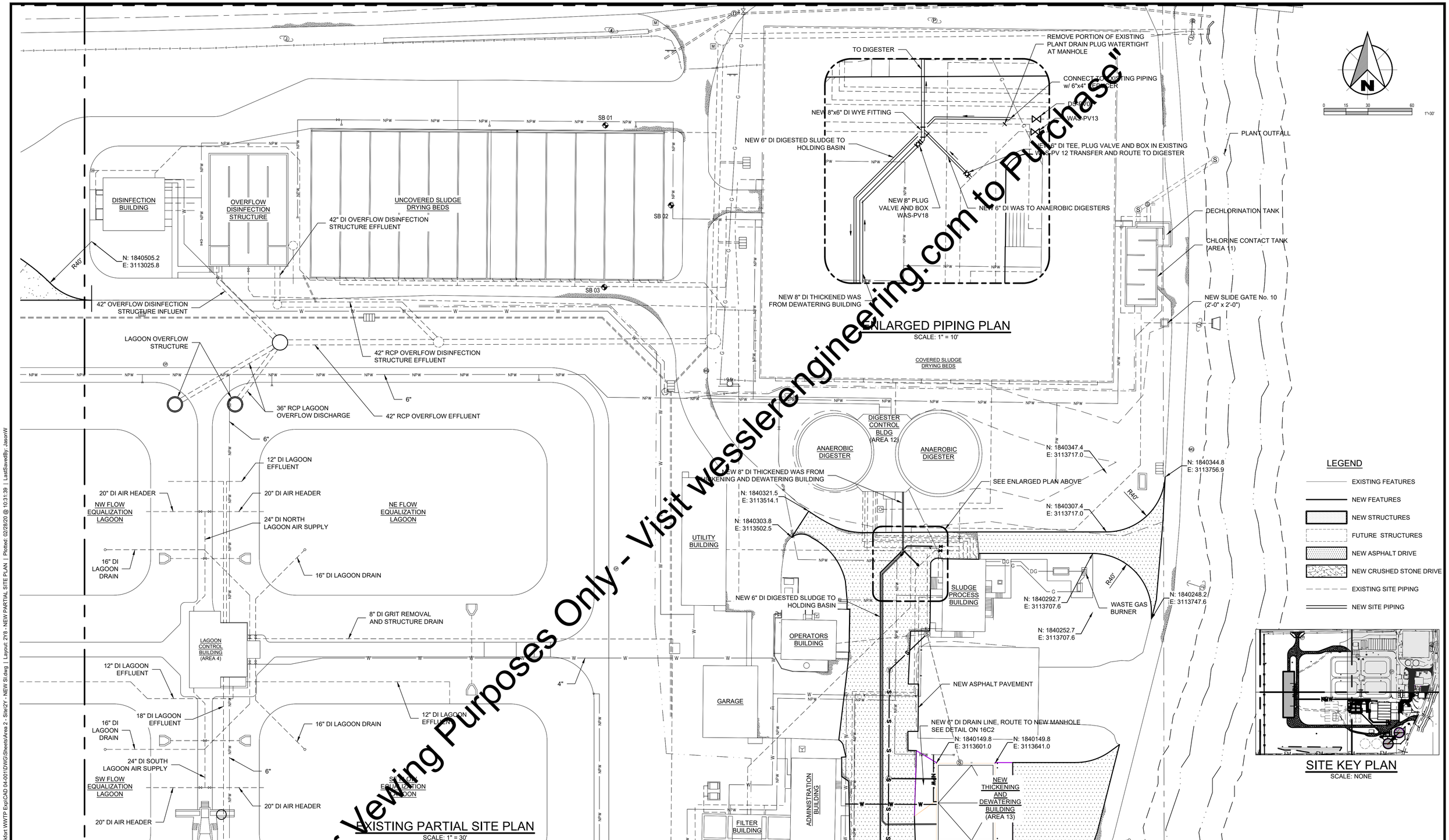

"For Viewing Purposes Only - Visit wesslerengineering.com to Purchase"

SCALE VERIFICATION	DRAWN BY	DLT/MLL	NO.	DATE	INITIALS	REVISION DESCRIPTIONS
BAR IS ONE INCH LONG ON ORIGINAL DRAWING	CHECKED BY	MLT				
	APPROVED BY	RWH				
	ISSUE DATE	MARCH 2020				
	PROJECT NUMBER	193216-04-001				

ROBERT W. HOLDEN, III REGISTERED No. 10000096 STATE OF INDIANA PROFESSIONAL ENGINEER 03/04/2020

WESSLER ENGINEERING
More than a Project™

WASTEWATER SYSTEM EXPANSION

CITY OF FRANKFORT, INDIANA
CONTRACT A - WASTEWATER TREATMENT PLANT

NEW PARTIAL SITE PLAN - NE

SHEET NO.
2Y8

PAGE NO.
21

Drawing: J:\Frankfort\Projects\193216 Frankfort WWTP Exp\CAD 04-001\DWG\Sheets\Area 2 - Site\2Y - NEW SI.dwg | Layout: 2Y8 - NEW PARTIAL SITE PLAN | Plotted: 02/28/20 @ 10:31:39 | LastSavedBy: JasonW

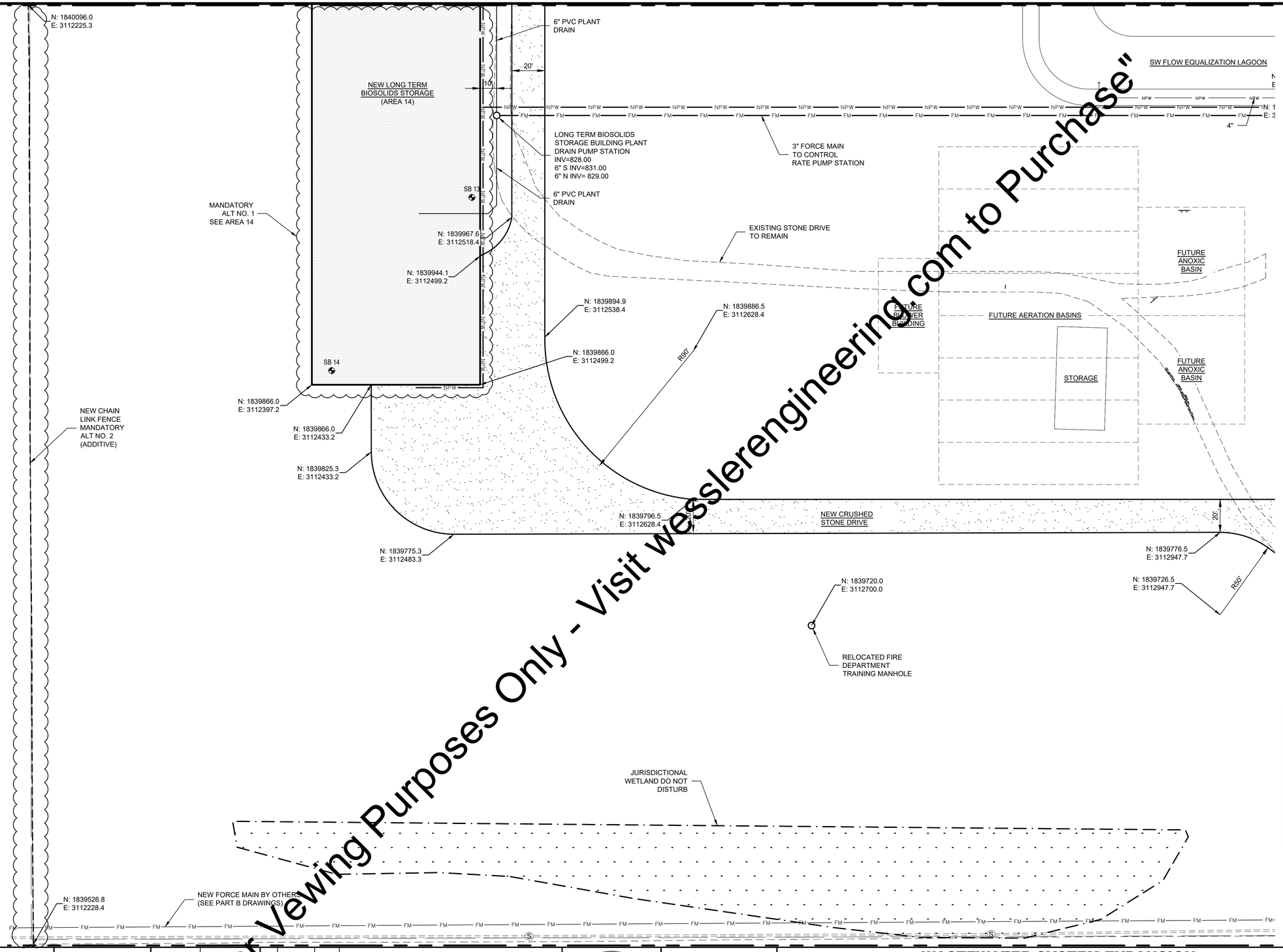

"For Viewing Purposes Only - Visit wesslerengineering.com to Purchase"

LEGEND

- EXISTING FEATURES
- NEW FEATURES
- NEW STRUCTURES
- FUTURE STRUCTURES
- NEW ASPHALT DRIVE
- NEW CRUSHED STONE DRIVE
- EXISTING SITE PIPING
- NEW SITE PIPING

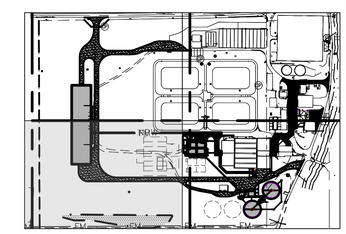

SITE KEY PLAN
SCALE: NONE

SCALE VERIFICATION	DRAWN BY	DLT/MLN
BAR IS ONE INCH LONG ON ORIGINAL DRAWING	CHECKED BY	DLT
	APPROVED BY	RWH
	ISSUE DATE	MARCH 2020
	PROJECT NUMBER	193216-04-001

NO.	DATE	INITIALS	REVISION DESCRIPTIONS

ROBERT W. HOLDEN II REGISTERED No. 10000096 STATE OF INDIANA PROFESSIONAL ENGINEER 03/04/2020

WESSLER ENGINEERING
More than a Project™

WASTEWATER SYSTEM EXPANSION
CITY OF FRANKFORT, INDIANA
CONTRACT A - WASTEWATER TREATMENT PLANT

NEW PARTIAL SITE PLAN - SW

SHEET NO. **2Y9**

PAGE NO. 22

Drawing: J:\Frankfort\Projects\193216 Frankfort WWTP Exp\CAD 04-001\DWG\Sheets\Area 2 - Site\2Y - NEW SI.dwg | Layout: 2Y9 - NEW PARTIAL SITE PLAN | Plotted: 03/04/20 @ 08:22:28 | LastSavedBy: MikeN

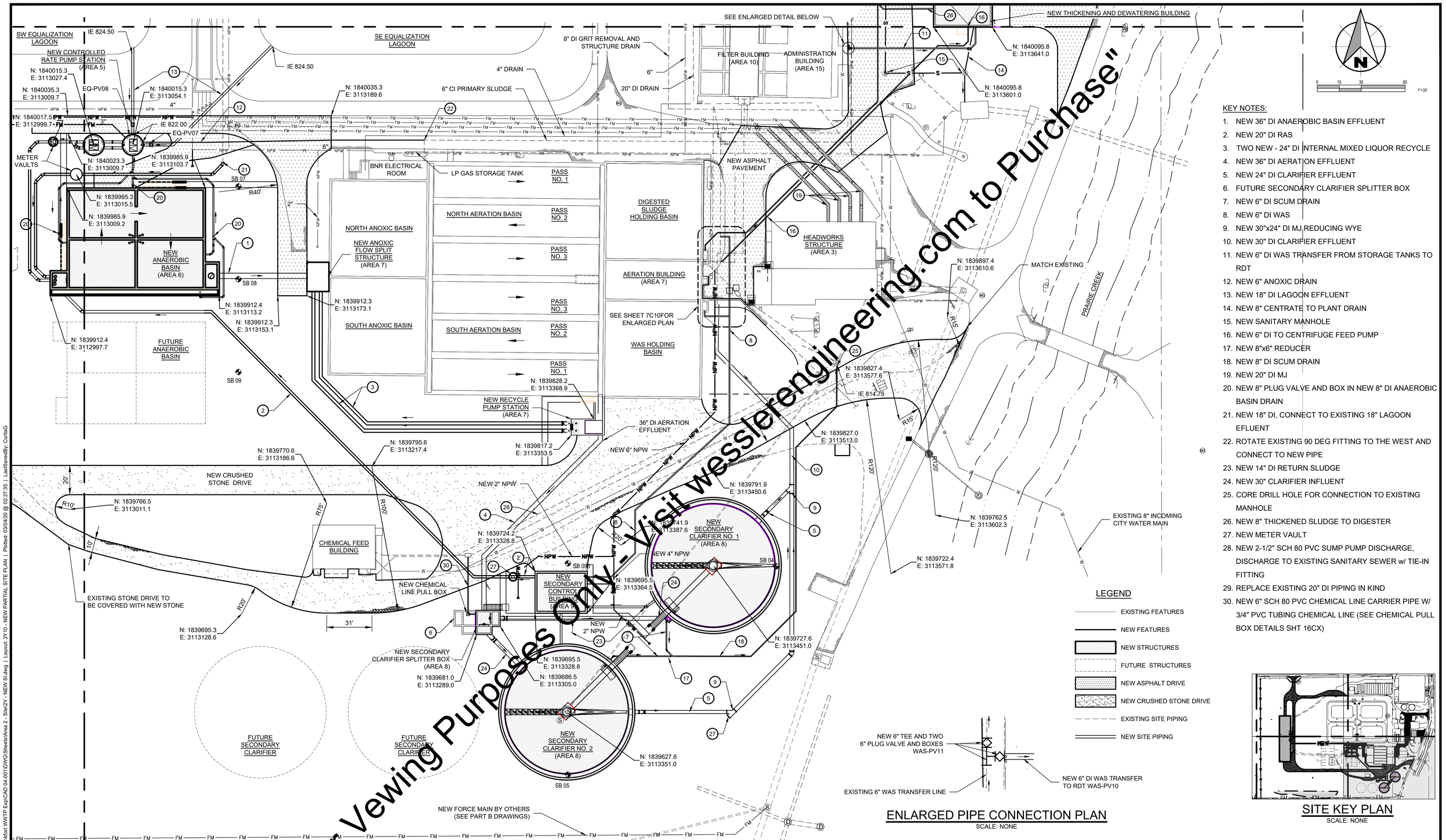

KEY NOTES:

1. NEW 36" DI ANAEROBIC BASIN EFFLUENT
2. NEW 20" DI RAS
3. TWO NEW - 24" DI INTERNAL MIXED LIQUOR RECYCLE
4. NEW 36" DI AERATION EFFLUENT
5. NEW 24" DI CLARIFIER EFFLUENT
6. FUTURE SECONDARY CLARIFIER SPLITTER BOX
7. NEW 6" DI SCUM DRAIN
8. NEW 6" DI WAS
9. NEW 30"x24" DI MJ REDUCING WYE
10. NEW 30" DI CLARIFIER EFFLUENT
11. NEW 6" DI WAS TRANSFER FROM STORAGE TANKS TO RDT
12. NEW 6" ANOXIC DRAIN
13. NEW 18" DI LAGOON EFFLUENT
14. NEW 8" CENTRATE TO PLANT DRAIN
15. NEW SANITARY MANHOLE
16. NEW 6" DI TO CENTRIFUGE FEED PUMP
17. NEW 8"x6" REDUCER
18. NEW 8" DI SCUM DRAIN
19. NEW 20" DI MJ
20. NEW 8" PLUG VALVE AND BOX IN NEW 8" DI ANAEROBIC BASIN DRAIN
21. NEW 18" DI, CONNECT TO EXISTING 18" LAGOON EFLUENT
22. ROTATE EXISTING 90 DEG FITTING TO THE WEST AND CONNECT TO NEW PIPE
23. NEW 14" DI RETURN SLUDGE
24. NEW 30" CLARIFIER INFLUENT
25. CORE DRILL HOLE FOR CONNECTION TO EXISTING MANHOLE
26. NEW 8" THICKENED SLUDGE TO DIGESTER
27. NEW METER VAULT
28. NEW 2-1/2" SCH 80 PVC SUMP PUMP DISCHARGE, DISCHARGE TO EXISTING SANITARY SEWER w/ TIE-IN FITTING
29. REPLACE EXISTING 20" DI PIPING IN KIND
30. NEW 6" SCH 80 PVC CHEMICAL LINE CARRIER PIPE W/ 3/4" PVC TUBING CHEMICAL LINE (SEE CHEMICAL PULL BOX DETAILS SHT 16CX)

LEGEND

- EXISTING FEATURES
- NEW FEATURES
- NEW STRUCTURES
- FUTURE STRUCTURES
- NEW ASPHALT DRIVE
- NEW CRUSHED STONE DRIVE
- EXISTING SITE PIPING
- NEW SITE PIPING

ENLARGED PIPE CONNECTION PLAN
SCALE: NONE

SITE KEY PLAN
SCALE: NONE

SCALE VERIFICATION	DRAWN BY	DLT/MLT
BAR IS ONE INCH LONG ON ORIGINAL DRAWING	CHECKED BY	ALT
	APPROVED BY	RWH
	ISSUE DATE	MARCH 2020
	PROJECT NUMBER	193216-04-001

NO.	DATE	INITIALS	REVISION DESCRIPTIONS

ROBERT W. HOLDEN, II REGISTERED No. 10000096 STATE OF INDIANA PROFESSIONAL ENGINEER 03/04/2020

WESSLER ENGINEERING
More than a Project™

WASTEWATER SYSTEM EXPANSION
CITY OF FRANKFORT, INDIANA
CONTRACT A - WASTEWATER TREATMENT PLANT

NEW PARTIAL SITE PLAN - SE

SHEET NO. **2Y10**
PAGE NO. 23

Drawing: J:\Frankfort\Projects\193216 Frankfort WWTP Exp\CAD 04-001\DWG\Sheets\Area 2 - Site\2Y - NEW SI.dwg | Layout: 2Y10 - NEW PARTIAL SITE PLAN | Plotted: 03/04/20 @ 02:27:35 | LastSavedBy: CurtisG

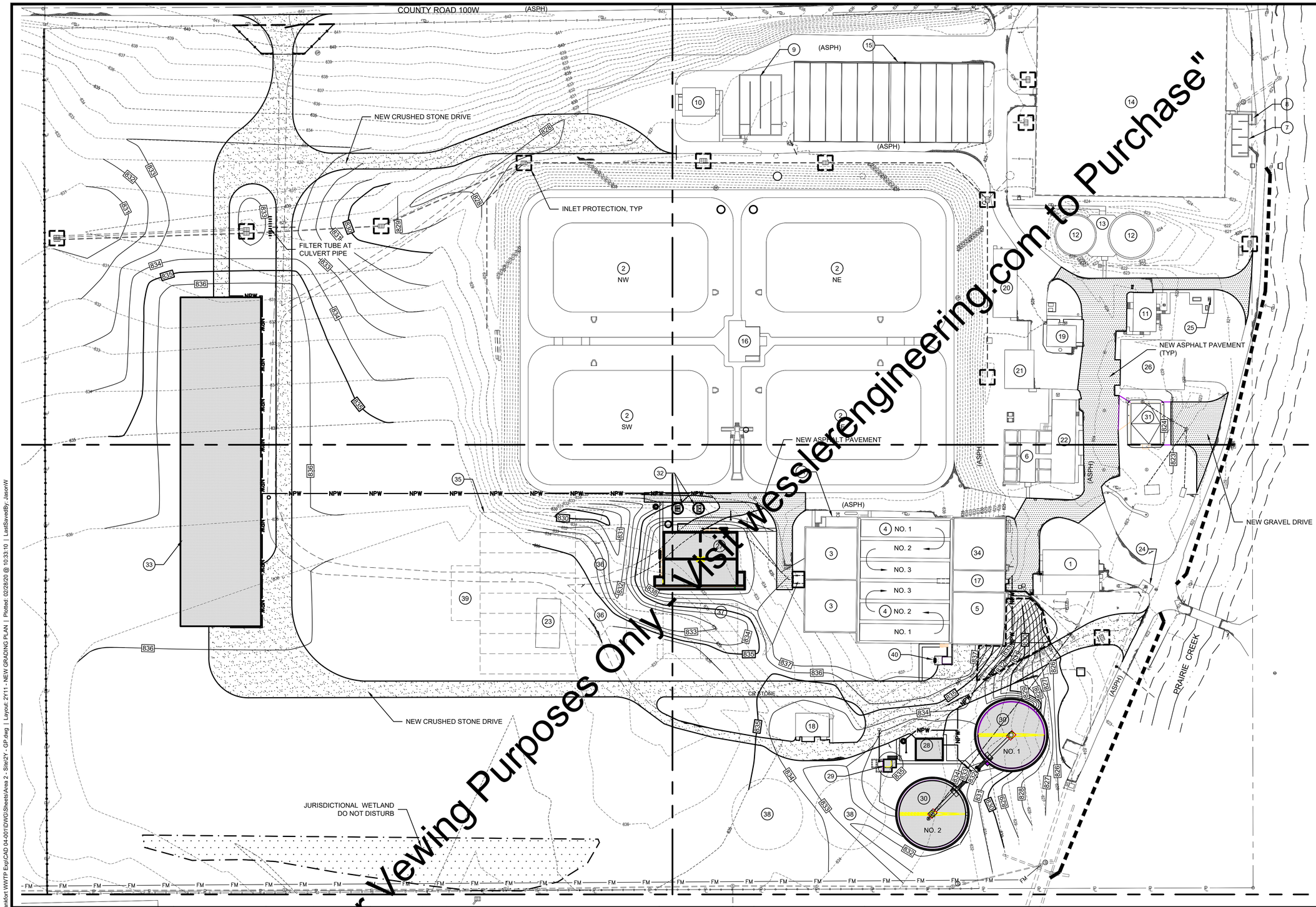

KEY NOTES

1 HEADWORKS STRUCTURE
2 FLOW EQUALIZATION LAGOONS
3 ANOXIC BASINS
4 AERATION BASINS
5 WAS HOLDING TANK
6 FILTER BUILDING
7 CHLORINE CONTACT TANK
8 DECHLORINATION TANK
9 OVERFLOW DISINFECTION STRUCTURE
10 DISINFECTION BUILDING
11 SLUDGE PROCESS BUILDING
12 ANAEROBIC DIGESTER
13 DIGESTER CONTROL BUILDING
14 COVERED SLUDGE DRYING BEDS
15 UNCOVERED SLUDGE DRYING BEDS
16 LAGOON CONTROL BUILDING
17 AERATION BUILDING
18 CHEMICAL FEED BUILDING
19 OPERATORS BUILDING
20 UTILITY BUILDING
21 GARAGE
22 ADMINISTRATION BUILDING
23 STORAGE
24 SEPTIC TANK UNLOADING FACILITY
25 WASTE GAS BURNER
26 GARAGE
27 NEW ANAEROBIC BASIN
28 NEW SECONDARY CONTROL BUILDING
29 NEW SECONDARY CLARIFIER SPLITTER BOX
30 NEW SECONDARY CLARIFIER
31 NEW THICKENING AND DEWATERING BUILDING
32 NEW CONTROLLED RATE PUMP STATION
33 NEW LONG TERM BIOSOLIDS STORAGE
34 DIGESTED SLUDGE HOLDING TANK
35 FUTURE AERATION TANKS
36 FUTURE ANOXIC BASIN
37 FUTURE ANAEROBIC BASIN
38 FUTURE SECONDARY CLARIFIER
39 FUTURE BLOWER BUILDING
40 NEW RECYCLE PUMP BUILDING
41 BNR ELECTRICAL ROOM

LEGEND

EXISTING FEATURES
NEW FEATURES
EXISTING CONTOURS
EXISTING CONTOURS
NEW 4'-0"W CONCRETE WALK
FILTER TUBE OR SILT FENCE PERIMETER PROTECTION
FILTER TUBE PERIMETER PROTECTION
INLET PROTECTION
CW CONCRETE WASHOUT
TEMPORARY SOIL STOCKPILE WITH PERIMETER PROTECTION
EROSION CONTROL BLANKET
NEW CRUSHED STONE PAVEMENT
NEW CONCRETE PAVEMENT

SCALE VERIFICATION	DRAWN BY	DLC
BAR IS ONE INCH LONG ON ORIGINAL DRAWING	CHECKED BY	ALT
	APPROVED BY	RWH
	ISSUE DATE	MARCH 2020
	PROJECT NUMBER	193216-04-001

NO.	DATE	INITIALS	REVISION DESCRIPTIONS

ROBERT W. HOLDEN II REGISTERED No. 10000096 STATE OF INDIANA PROFESSIONAL ENGINEER 03/04/2020

WESSLER ENGINEERING
More than a Project™

WASTEWATER SYSTEM EXPANSION

CITY OF FRANKFORT, INDIANA
CONTRACT A - WASTEWATER TREATMENT PLANT

NEW GRADING PLAN

SHEET NO. 2Y11

PAGE NO. 24

Drawing: J:\FrankfortProjects\193216 Frankfort WWTP Exp\CAD 04-001DWG\Sheets\Area 2 - Site\2Y - GP.dwg | Layout: 2Y11 - NEW GRADING PLAN | Plotted: 02/28/20 @ 10:33:10 | LastSavedBy: JasonW

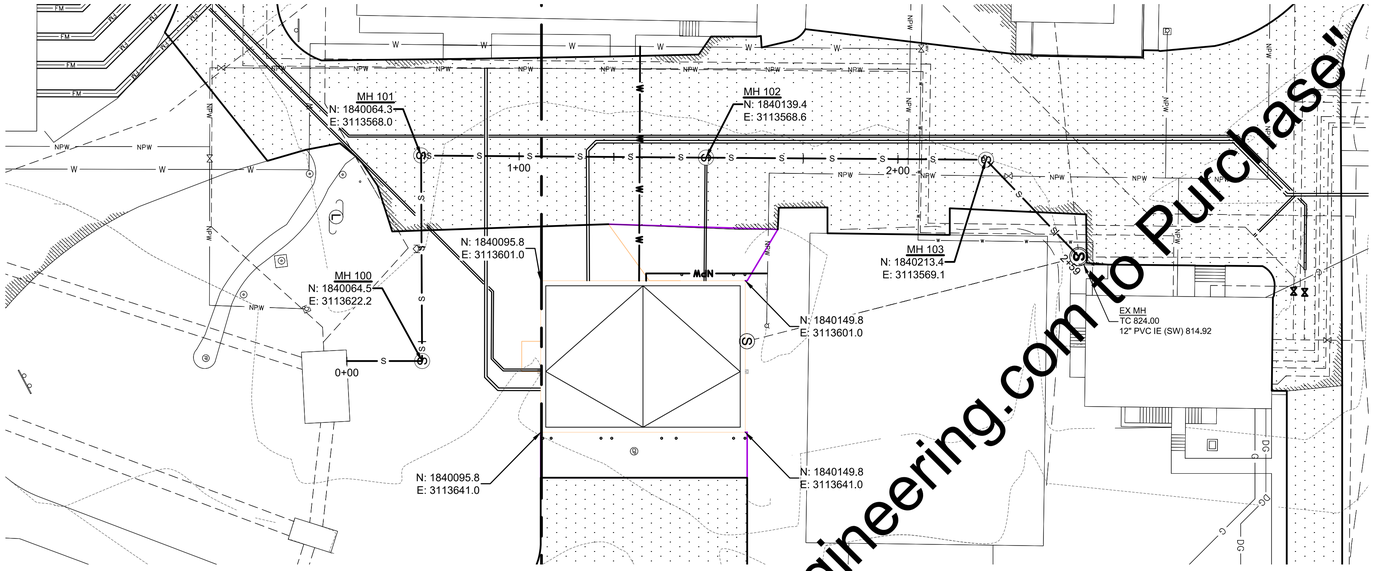

PLAN - PLANT DRAIN

SCALE: 1" = 20'

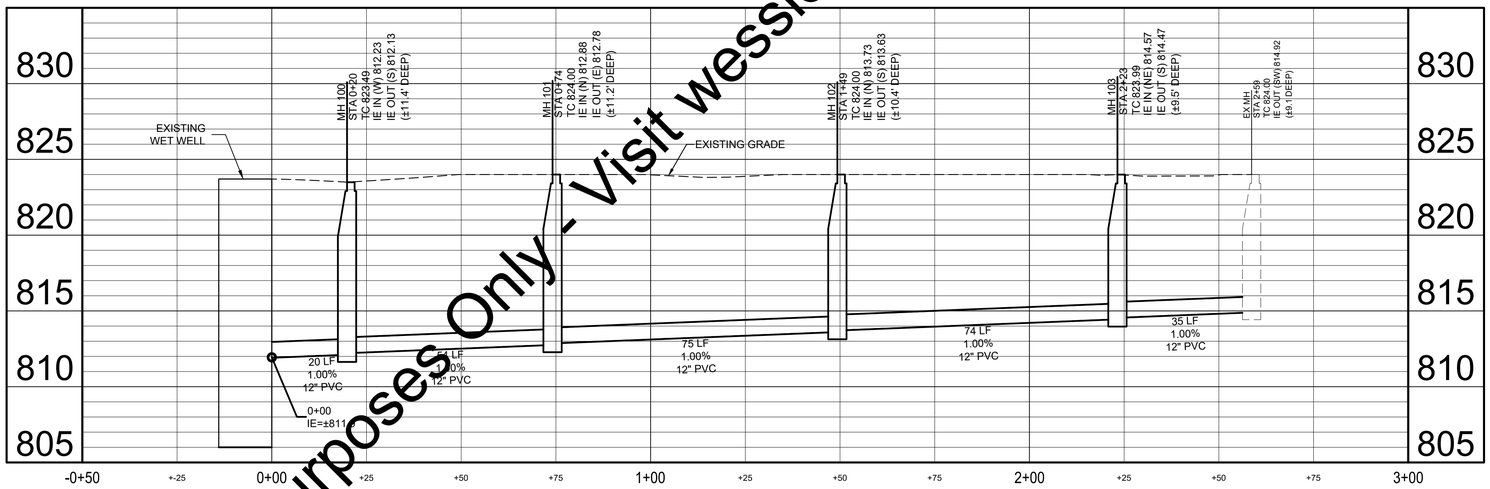

PROFILE - PLANT DRAIN

HORIZ SCALE: 1" = 20'
VERT SCALE: 1" = 5'

"For Vewing Purposes Only - Visit wesslerengineering.com to Purchase"

SCALE VERIFICATION	DRAWN BY	JRW
BAR IS ONE INCH LONG ON ORIGINAL DRAWING	CHECKED BY	KLT
	APPROVED BY	RWH
	ISSUE DATE	MARCH 2020
	PROJECT NUMBER	193216-04-001

NO.	DATE	INITIALS	REVISION DESCRIPTIONS

ROBERT W. HOLDEN, II
REGISTERED No. 10000096
STATE OF INDIANA
PROFESSIONAL ENGINEER
03/04/2020

WESSLER ENGINEERING
More than a Project™

WASTEWATER SYSTEM EXPANSION

CITY OF FRANKFORT, INDIANA
CONTRACT A - WASTEWATER TREATMENT PLANT

PLANT DRAIN PLAN AND PROFILE

SHEET NO.
2Y12

PAGE NO.
25

Drawing: J:\Frankfort\Projects\193216 Frankfort WWTP Exp\CAD 04-001\DWG\Sheets\Area 2 - Site\2Y - PP_NEW SI.dwg | Layout: 2Y12 - PP | Plotted: 02/28/20 @ 10:33:40 | LastSavedBy: JasonW

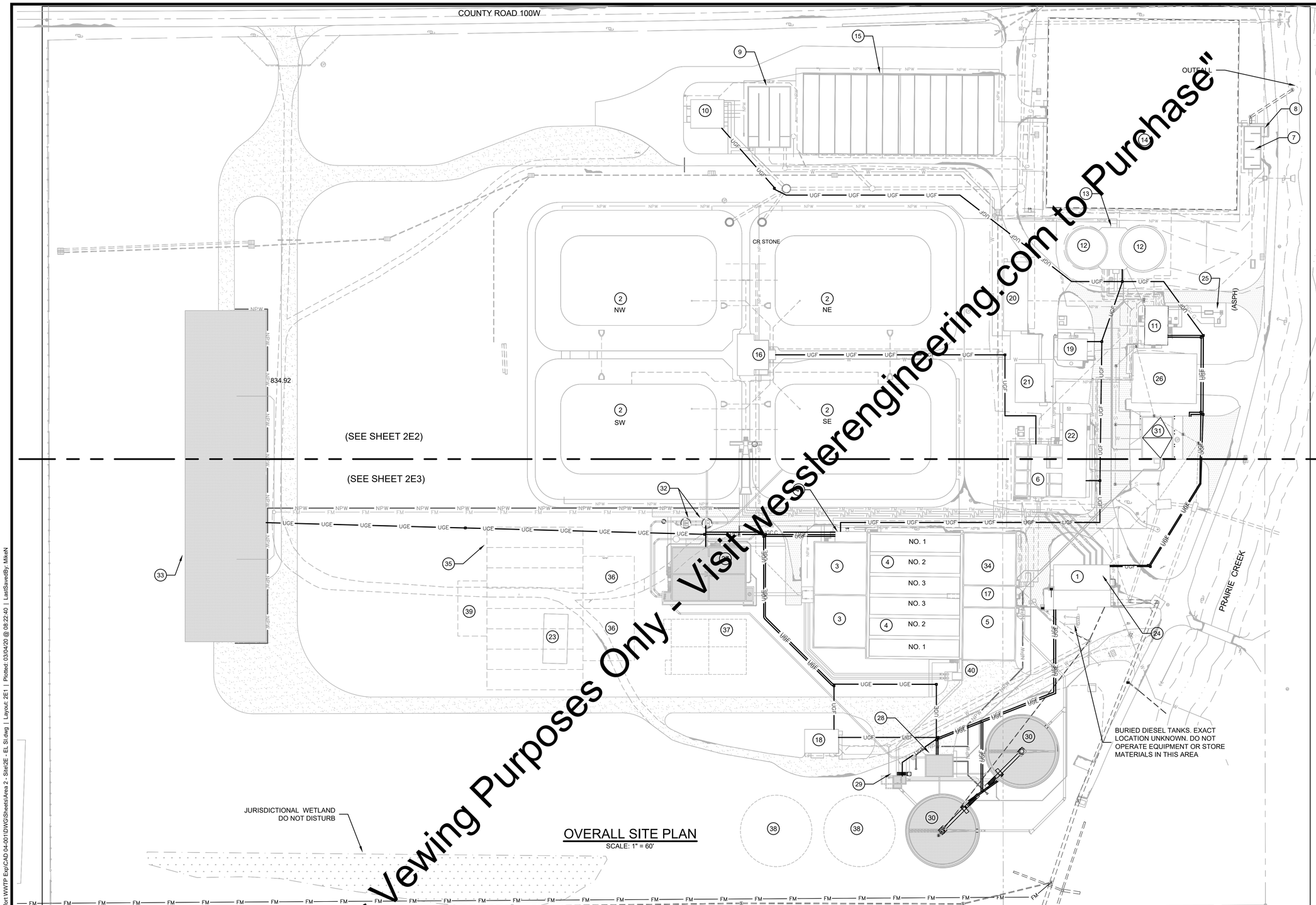

OVERALL SITE PLAN
SCALE: 1" = 60'

"For Vewing Purposes Only - Visit wesslerengineering.com to Purchase"

KEY NOTES

1 HEADWORKS STRUCTURE
2 FLOW EQUALIZATION LAGOONS
3 ANOXIC BASINS
4 AERATION BASINS
5 WAS HOLDING TANK
6 FILTER BUILDING
7 CHLORINE CONTACT TANK
8 DECHLORINATION TANK
9 OVERFLOW DISINFECTION STRUCTURE
10 DISINFECTION BUILDING
11 SLUDGE PROCESS BUILDING
12 ANAEROBIC DIGESTER
13 DIGESTER CONTROL BUILDING
14 COVERED SLUDGE DRYING BEDS
15 UNCOVERED SLUDGE DRYING BEDS
16 LAGOON CONTROL BUILDING
17 AERATION BUILDING
18 CHEMICAL FEED BUILDING
19 OPERATORS BUILDING
20 UTILITY BUILDING
21 GARAGE
22 ADMINISTRATION BUILDING
23 STORAGE
24 SEPTIC TANK UNLOADING FACILITY
25 WASTE GAS BURNER
26 GARAGE
27 NEW ANAEROBIC BASIN
28 NEW SECONDARY CONTROL BUILDING
29 NEW SECONDARY CLARIFIER SPLITTER BOX
30 NEW SECONDARY CLARIFIER
31 NEW THICKENING AND DEWATERING BUILDING
32 NEW CONTROLLED RATE PUMP STATION
33 NEW LONG TERM BIOSOLIDS STORAGE BUILDING
34 DIGESTED SLUDGE HOLDING TANK
35 FUTURE AERATION TANKS
36 FUTURE ANOXIC BASIN
37 FUTURE ANAEROBIC BASIN
38 FUTURE SECONDARY CLARIFIER
39 FUTURE BLOWER BUILDING
40 NEW RECYCLE PUMP BUILDING
41 BNR STORAGE ROOM

SCALE VERIFICATION	DRAWN BY	EAS
BAR IS ONE INCH LONG ON ORIGINAL DRAWING	CHECKED BY	WCM
	APPROVED BY	WCM
	ISSUE DATE	MARCH 2020
	PROJECT NUMBER	193216-04-001

NO.	DATE	INITIALS	REVISION DESCRIPTIONS

WAYNE C. MOORE REGISTERED No. 10707476 STATE OF INDIANA PROFESSIONAL ENGINEER 03/04/2020

WESSLER ENGINEERING
More than a Project™

WASTEWATER SYSTEM EXPANSION
CITY OF FRANKFORT, INDIANA
CONTRACT A - WASTEWATER TREATMENT PLANT

OVERALL ELECTRICAL SITE PLAN

SHEET NO. **2E1**
PAGE NO. 26

Drawing: J:\Frankfort\Projects\193216 Frankfort WWTP Exp\CAD 04-001\DWG\Sheets\Area 2 - Site\2E - EL SI.dwg | Layout: 2E1 | Plotted: 03/04/20 @ 08:22:40 | LastSavedBy: MikeN

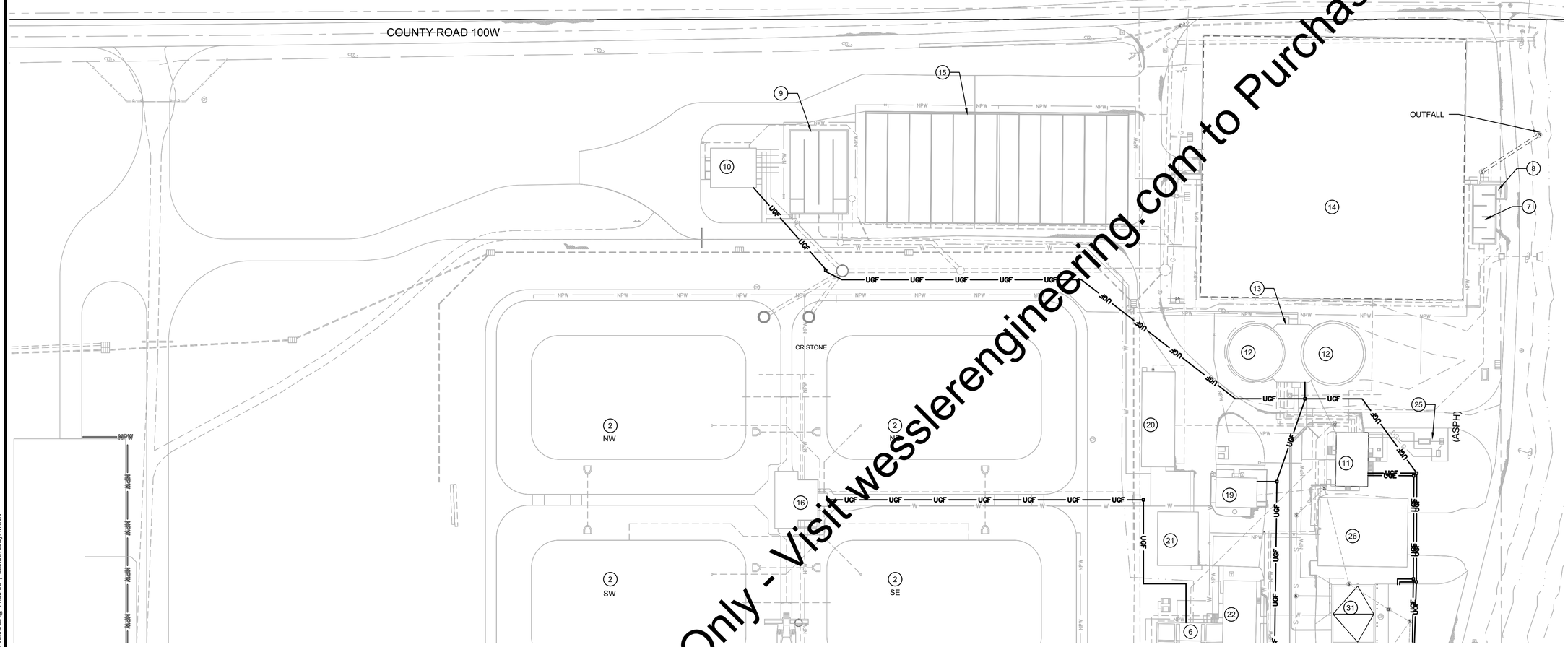

ENLARGED ELECTRICAL SITE PLAN - NORTH

SCALE: 1" = 50'

"For Viewing Purposes Only - Visit wesslerengineering.com to Purchase"

KEY NOTES (ALL ELECTRICAL SITE PLANS)

1 HEADWORKS STRUCTURE
2 FLOW EQUALIZATION LAGOONS
3 ANOXIC BASINS
4 AERATION BASINS
5 WAS HOLDING TANK
6 FILTER BUILDING
7 CHLORINE CONTACT TANK
8 DECHLORINATION TANK
9 OVERFLOW DISINFECTION STRUCTURE
10 DISINFECTION BUILDING
11 SLUDGE PROCESS BUILDING
12 ANAEROBIC DIGESTER
13 DIGESTER CONTROL BUILDING
14 COVERED SLUDGE DRYING BEDS
15 UNCOVERED SLUDGE DRYING BEDS
16 LAGOON CONTROL BUILDING
17 AERATION BUILDING
18 CHEMICAL FEED BUILDING
19 OPERATORS BUILDING
20 UTILITY BUILDING
21 GARAGE
22 ADMINISTRATION BUILDING
23 STORAGE
24 SEPTIC TANK UNLOADING FACILITY
25 WASTE GAS BURNER
26 GARAGE
27 NEW ANAEROBIC BASIN
28 NEW SECONDARY CONTROL BUILDING
29 NEW SECONDARY CLARIFIER SPLITTER BOX
30 NEW SECONDARY CLARIFIER
31 NEW THICKENING AND DEWATERING BUILDING
32 NEW CONTROLLED RATE PUMP STATION
33 NEW LONG TERM BIOSOLIDS STORAGE BUILDING
34 DIGESTED SLUDGE HOLDING TANK
35 FUTURE AERATION TANKS
36 FUTURE ANOXIC BASIN
37 FUTURE ANAEROBIC BASIN
38 FUTURE SECONDARY CLARIFIER
39 FUTURE BLOWER BUILDING
40 NEW RECYCLE PUMP BUILDING
41 BNR STORAGE ROOM

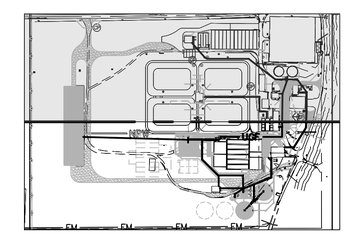

SITE KEY PLAN

SCALE: NONE

SCALE VERIFICATION	DRAWN BY	EAS
BAR IS ONE INCH LONG ON ORIGINAL DRAWING	CHECKED BY	WCM
	APPROVED BY	WCM
	ISSUE DATE	MARCH 2020
	PROJECT NUMBER	193216-04-001

NO.	DATE	INITIALS	REVISION DESCRIPTIONS

WAYNE C. MOORE REGISTERED No. 10707476 STATE OF INDIANA PROFESSIONAL ENGINEER 03/04/2020

WESSLER ENGINEERING
More than a Project™

WASTEWATER SYSTEM EXPANSION

CITY OF FRANKFORT, INDIANA
CONTRACT A - WASTEWATER TREATMENT PLANT

ENLARGED ELECTRICAL SITE PLAN - NORTH

SHEET NO. **2E2**

PAGE NO. 27

Drawing: J:\Frankfort\Projects\193216 Frankfort WWTP Exp\CAD 04-001\DWG\Sheets\Area 2 - Site\2E - EL SI.dwg | Layout: 2E2 | Plotted: 03/03/20 @ 11:03:58 | LastSavedBy: MikeN

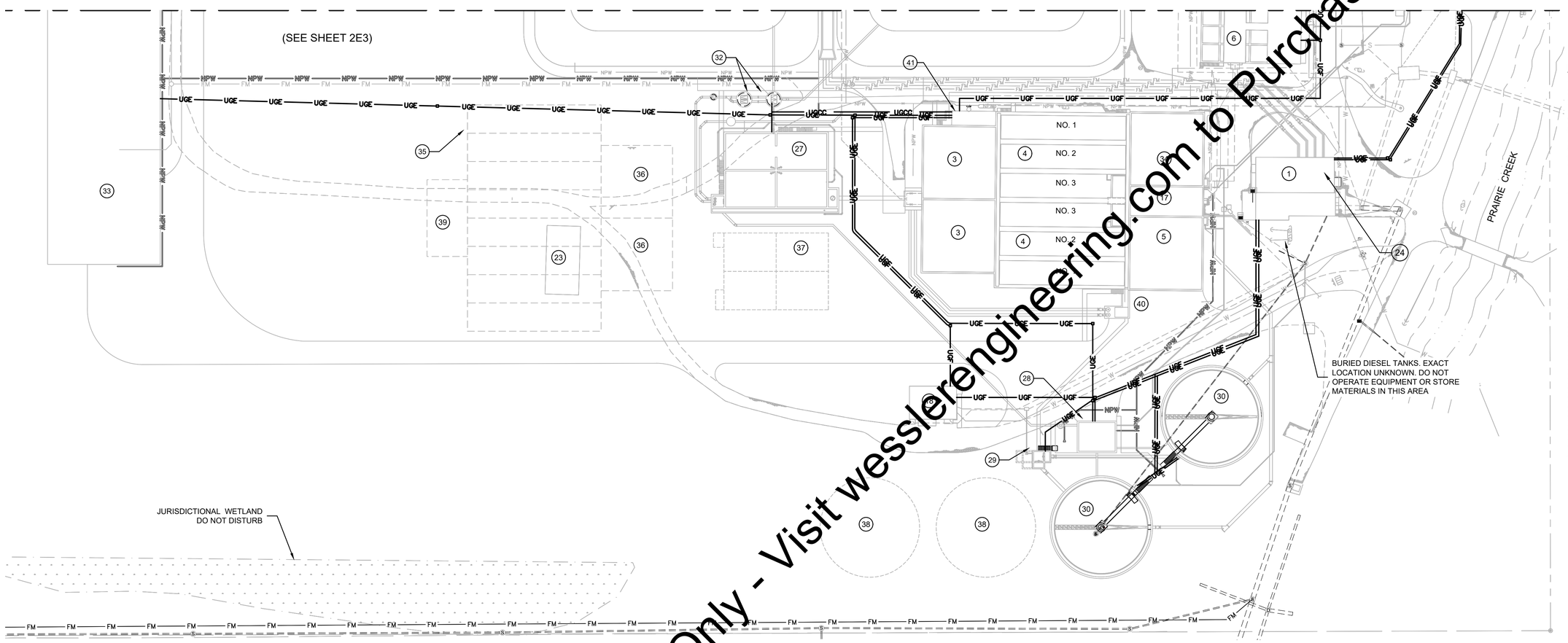

ENLARGED ELECTRICAL SITE PLAN - SOUTH

SCALE: 1" = 50'

KEY NOTES (ALL ELECTRICAL SITE PLANS)

1 HEADWORKS STRUCTURE
2 FLOW EQUALIZATION LAGOONS
3 ANOXIC BASINS
4 AERATION BASINS
5 WAS HOLDING TANK
6 FILTER BUILDING
7 CHLORINE CONTACT TANK
8 DECHLORINATION TANK
9 OVERFLOW DISINFECTION STRUCTURE
10 DISINFECTION BUILDING
11 SLUDGE PROCESS BUILDING
12 ANAEROBIC DIGESTER
13 DIGESTER CONTROL BUILDING
14 COVERED SLUDGE DRYING BEDS
15 UNCOVERED SLUDGE DRYING BEDS
16 LAGOON CONTROL BUILDING
17 AERATION BUILDING
18 CHEMICAL FEED BUILDING
19 OPERATORS BUILDING
20 UTILITY BUILDING
21 GARAGE
22 ADMINISTRATION BUILDING
23 STORAGE
24 SEPTIC TANK UNLOADING FACILITY
25 WASTE GAS BURNER
26 GARAGE
27 NEW ANAEROBIC BASIN
28 NEW SECONDARY CONTROL BUILDING
29 NEW SECONDARY CLARIFIER SPLITTER BOX
30 NEW SECONDARY CLARIFIER
31 NEW THICKENING AND DEWATERING BUILDING
32 NEW CONTROLLED RATE PUMP STATION
33 NEW LONG TERM BIOSOLIDS STORAGE BUILDING
34 DIGESTED SLUDGE HOLDING TANK
35 FUTURE AERATION TANKS
36 FUTURE ANOXIC BASIN
37 FUTURE ANAEROBIC BASIN
38 FUTURE SECONDARY CLARIFIER
39 FUTURE BLOWER BUILDING
40 NEW RECYCLE PUMP BUILDING
41 BNR STORAGE ROOM

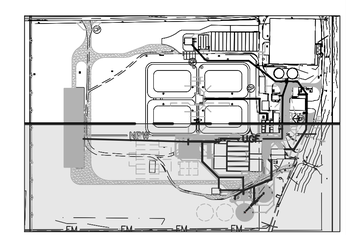

SITE KEY PLAN

SCALE: NONE

For Vewing Purposes Only - Visit wesslerengineering.com to Purchase"

SCALE VERIFICATION	DRAWN BY	EAS
BAR IS ONE INCH LONG ON ORIGINAL DRAWING	CHECKED BY	WCM
	APPROVED BY	WCM
	ISSUE DATE	MARCH 2020
	PROJECT NUMBER	193216-04-001

NO.	DATE	INITIALS	REVISION DESCRIPTIONS

WAYNE C. MOORE REGISTERED No. 10707476 STATE OF INDIANA PROFESSIONAL ENGINEER 03/04/2020

WESSLER ENGINEERING
More than a Project™

WASTEWATER SYSTEM EXPANSION

CITY OF FRANKFORT, INDIANA
CONTRACT A - WASTEWATER TREATMENT PLANT

ENLARGED ELECTRICAL SITE PLAN - SOUTH

SHEET NO. **2E3**

PAGE NO. 28

Drawing: J:\Frankfort\Projects\193216 Frankfort WWTP Exp\CAD 04-001\DWG\Sheets\Area 2 - Site\2E - EL SI.dwg | Layout: 2E3 | Plotted: 03/03/20 @ 11:05:02 | LastSavedBy: MikeN

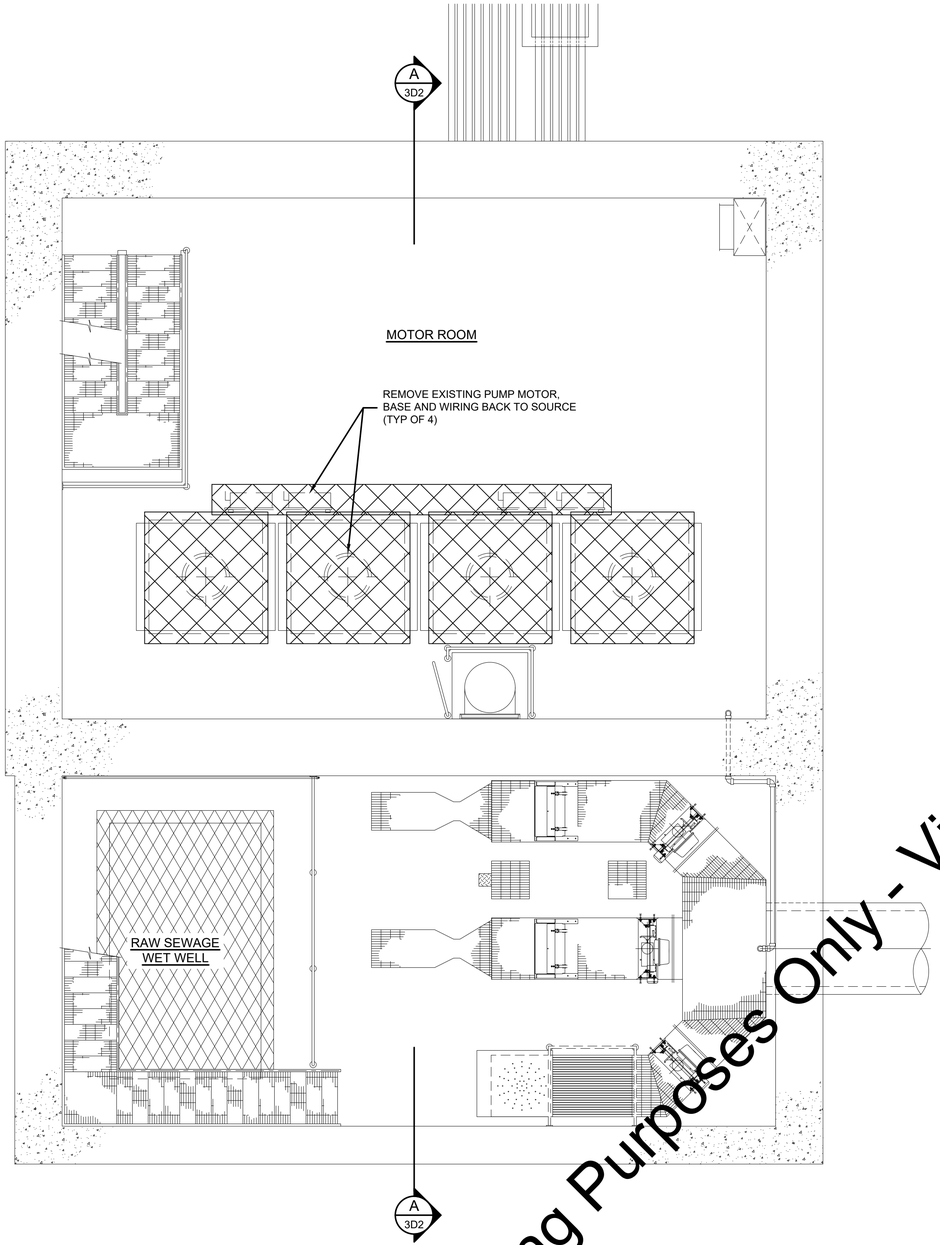

MID LEVEL DEMOLITION PLAN

SCALE:1/4"=1'-0"

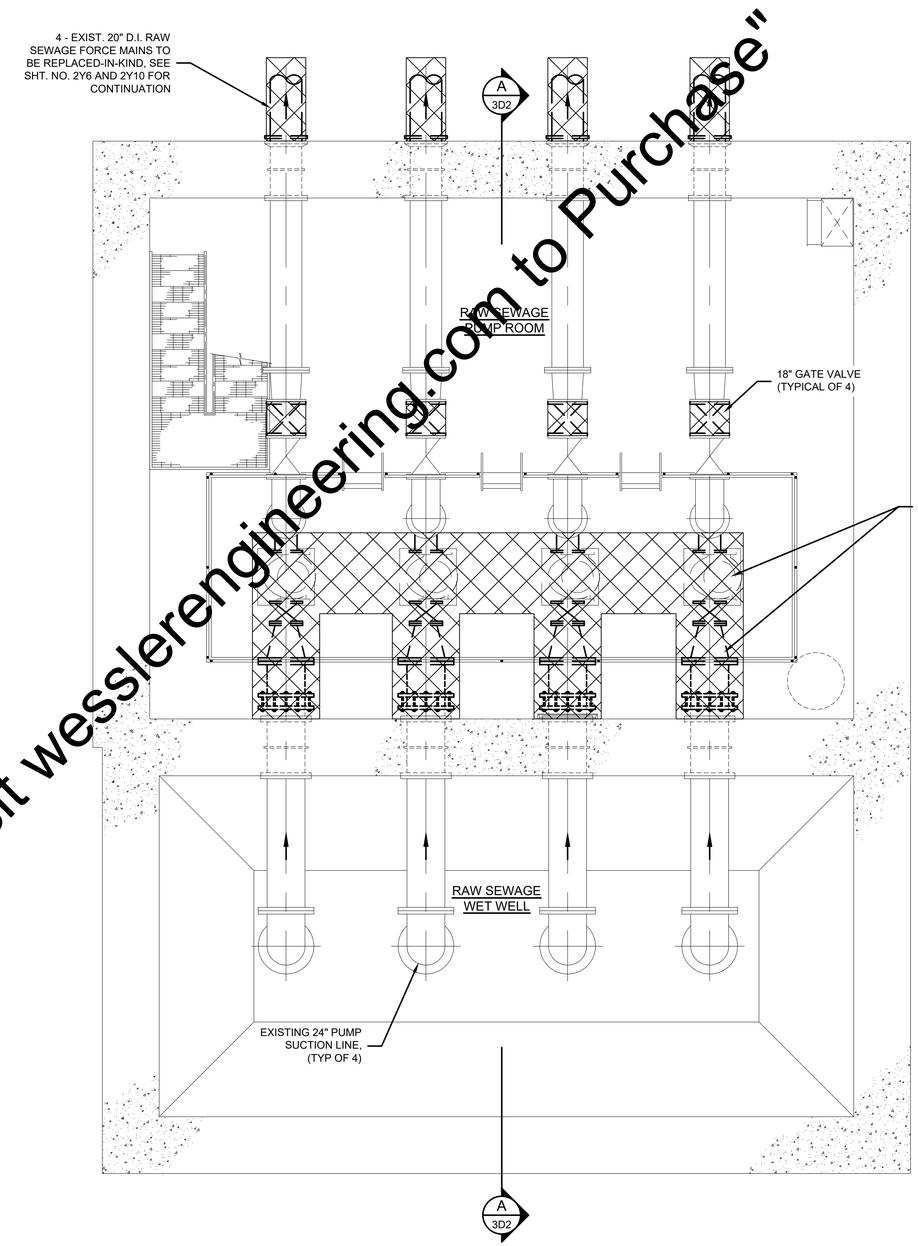

LOWER LEVEL DEMOLITION PLAN

SCALE:1/4"=1'-0"

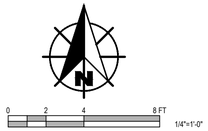

LEGEND

EXISTING FEATURES TO REMAIN

EXISTING FEATURES TO BE DEMOLISHED

"For Viewing Purposes Only - Visit wesslerengineering.com to Purchase"

SCALE VERIFICATION	DRAWN BY	MLN
BAR IS ONE INCH LONG ON ORIGINAL DRAWING	CHECKED BY	ALT
	APPROVED BY	RWH
	ISSUE DATE	MARCH 2020
	PROJECT NUMBER	193216-04-001

NO.	DATE	INITIALS	REVISION DESCRIPTIONS
	EXISTING		

ROBERT W. HOLDEN II REGISTERED No. 10000096 STATE OF INDIANA PROFESSIONAL ENGINEER 03/04/2020

WESSLER ENGINEERING

More than a Project™

WASTEWATER SYSTEM EXPANSION

CITY OF FRANKFORT, INDIANA

CONTRACT A - WASTEWATER TREATMENT PLANT

EXISTING HEADWORKS STRUCTURE - DEMOLITION PLANS

SHEET NO. **3D1**

PAGE NO. 29

Drawing: J:\Frankfort\Projects\193216 Frankfort WWTP Exp\CAD 04-001\DWG\Sheets\Area 3 - HW\3D HW DEMO.dwg | Layout: 3D1 - HEADWORKS DEMOLITION PLAN | Plotted: 02/28/20 @ 10:38:33 | LastSavedBy: TravisL

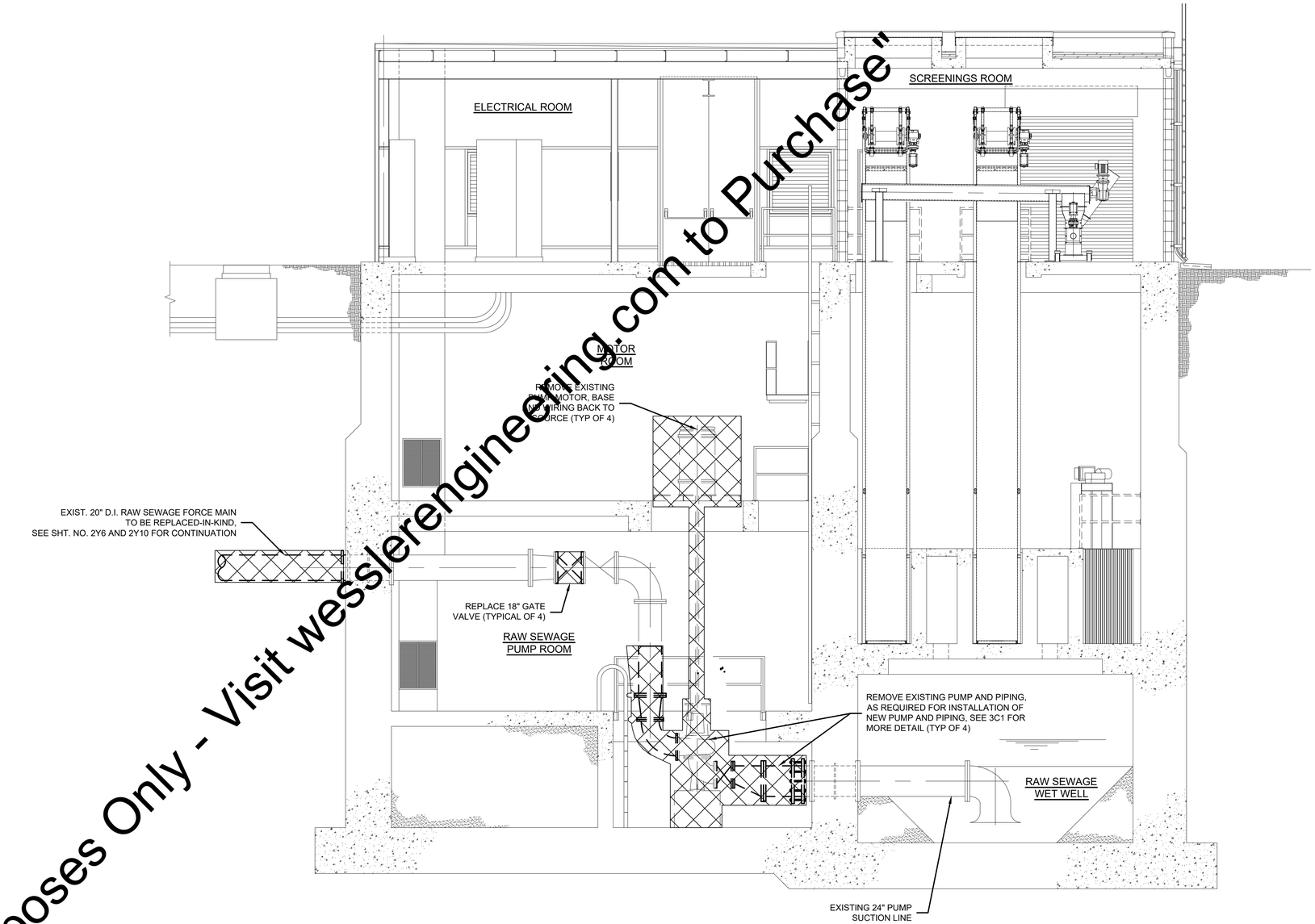

SECTION A / 3D1

SCALE: 1/4" = 1'-0"

LEGEND

EXISTING FEATURES TO REMAIN

EXISTING FEATURES TO BE DEMOLISHED

"For Vewing Purposes Only - Visit wesslerengineering.com to Purchase"

SCALE VERIFICATION	DRAWN BY	MLN
BAR IS ONE INCH LONG ON ORIGINAL DRAWING	CHECKED BY	ALT
	APPROVED BY	RWH
	ISSUE DATE	MARCH 2020
	PROJECT NUMBER	193216-04-001

NO.	DATE	INITIALS	REVISION DESCRIPTIONS
	EXISTING		

ROBERT W. HOLDEN, II REGISTERED No. 10000096 STATE OF INDIANA PROFESSIONAL ENGINEER 03/04/2020

WESSLER ENGINEERING

More than a Project™

WASTEWATER SYSTEM EXPANSION

CITY OF FRANKFORT, INDIANA

CONTRACT A - WASTEWATER TREATMENT PLANT

EXISTING HEADWORKS STRUCTURE - DEMOLITION SECTION

SHEET NO. **3D2**

PAGE NO. 30

Drawing: J:\Frankfort\Projects\193216 Frankfort WWTP Exp\CAD 04-0010\DWG\Sheets\Area 3 - HW\3D HW DEMO.dwg | Layout: 3D2 - HEADWORKS DEMOLITION SECTION | Plotted: 02/28/20 @ 10:38:56 | LastSavedBy: TravisL

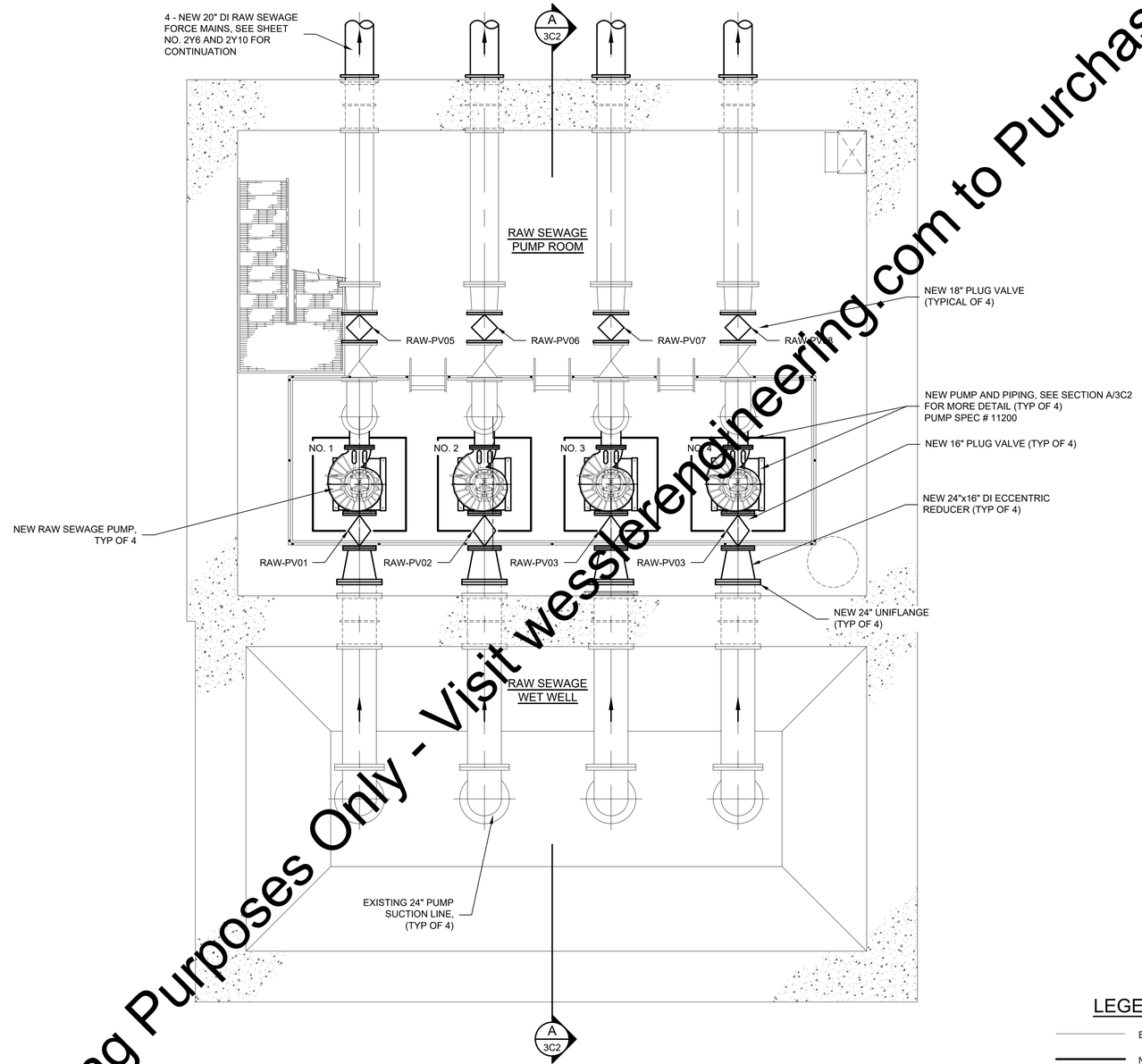

LOWER LEVEL MODIFICATIONS PLAN

0 2 4 8 FT
1/4"=1'-0"

LEGEND

EXISTING FEATURES

NEW FEATURES

"For Vewing Purposes Only - Visit wesslerengineering.com to Purchase"

SCALE VERIFICATION	DRAWN BY	MLN
BAR IS ONE INCH LONG ON ORIGINAL DRAWING	CHECKED BY	ALT
	APPROVED BY	RWH
	ISSUE DATE	MARCH 2020
	PROJECT NUMBER	193216-04-001

NO.	DATE	INITIALS	REVISION DESCRIPTIONS
	EXISTING		

ROBERT W. HOLDEN, II REGISTERED No. 10000096 STATE OF INDIANA PROFESSIONAL ENGINEER 03/04/2020

WESSLER ENGINEERING
More than a Project™

WASTEWATER SYSTEM EXPANSION

CITY OF FRANKFORT, INDIANA
CONTRACT A - WASTEWATER TREATMENT PLANT

EXISTING HEADWORKS STRUCTURE - MODIFICATIONS PLAN

SHEET NO. **3C1**

PAGE NO. 31

Drawing: J:\Frankfort\Projects\193216 Frankfort WWTP Exp\CAD 04-001\DWG\Sheets\Area 3 - HW\3C HW-MOD.dwg | Layout: 3C1 - HEADWORKS MODs PLAN | Plotted: 02/28/20 @ 10:39:32 | LastSavedBy: Travis.L

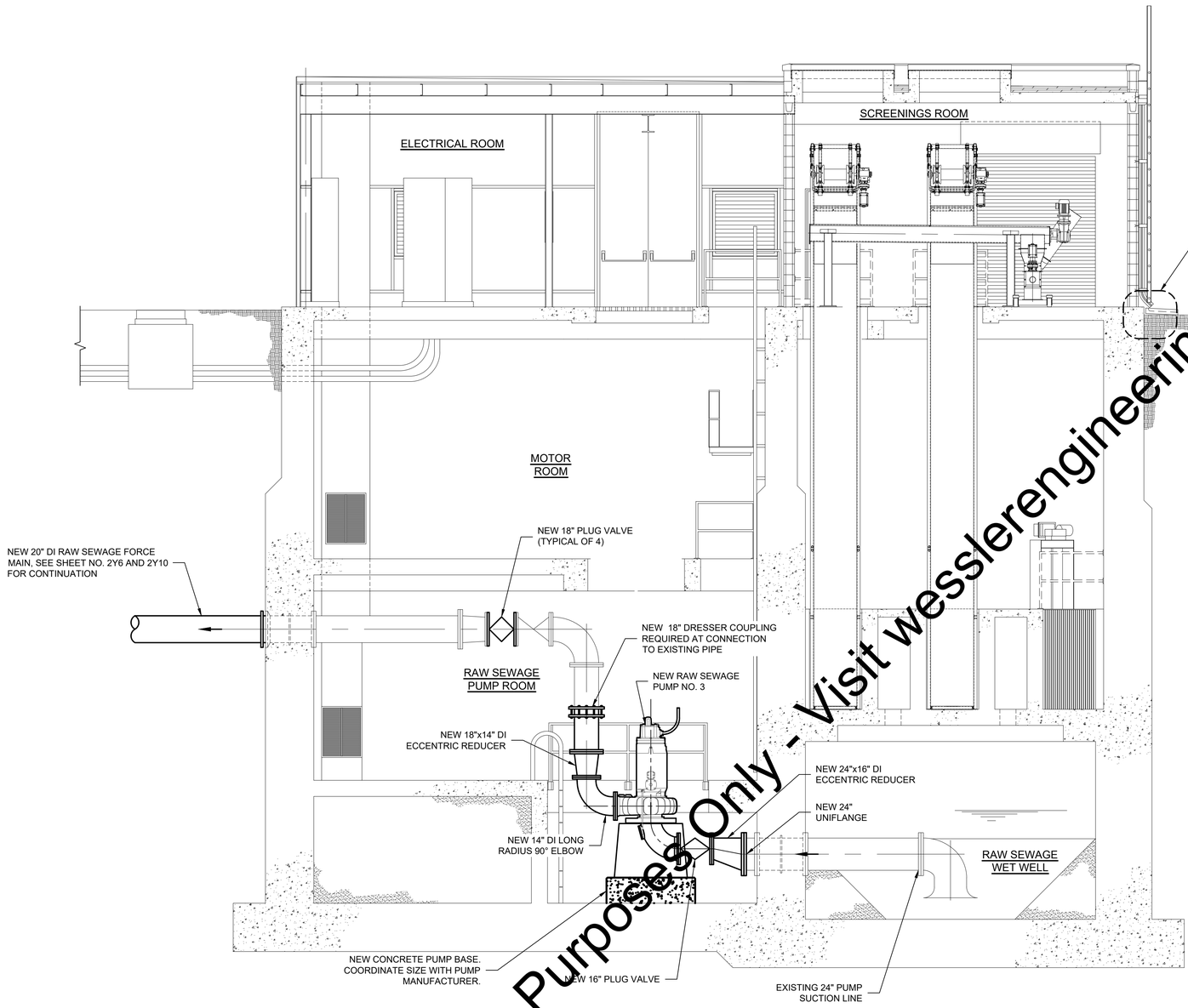

SECTION A 3C1

0 2 4 8 FT
1/4"=1'-0"

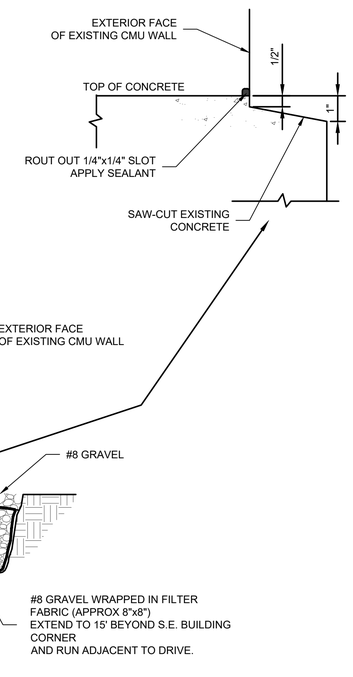

SOUTH WALL SECTION

0 1/2 1 1 1/2 FT
1 1/2"=1'-0"

LEGEND

EXISTING FEATURES

NEW FEATURES

"For Vewing Purposes Only - Visit wesslerengineering.com to Purchase"

SCALE VERIFICATION	DRAWN BY	MLN	NO.	DATE	INITIALS	REVISION DESCRIPTIONS
BAR IS ONE INCH LONG ON ORIGINAL DRAWING	CHECKED BY	KLT				
	APPROVED BY	RWH				
	ISSUE DATE					
	MARCH 2020			EXISTING		
	PROJECT NUMBER					
	193216-04-001					

ROBERT W. HOLDER II REGISTERED No. 10000096 STATE OF INDIANA PROFESSIONAL ENGINEER 03/04/2020

WESSLER ENGINEERING
More than a Project™

WASTEWATER SYSTEM EXPANSION

CITY OF FRANKFORT, INDIANA
CONTRACT A - WASTEWATER TREATMENT PLANT

EXISTING HEADWORKS STRUCTURE - MODIFICATIONS SECTIONS

SHEET NO. **3C2**

PAGE NO. 32

Drawing: J:\Frankfort\Projects\193216 Frankfort WWTP Exp\CAD 04-001\DWG\Sheets\Area 3 - HW\3C HW-MOD.dwg | Layout: 3C2 - HEADWORKS MODs SECTION | Plotted: 02/28/20 @ 10:41:07 | LastSavedBy: TravisL

KEY NOTES

1 NEW ATS MUST FIT IN EXISTING LOCATION. MAX DIMENSIONS ARE 36"W X 18"D.
2 EXISTING PLC ENCLOSURE TO BE REUSED FOR NEW PCC-HW. REUSE EXISTING CONTROL WIRES AS SHOWN ON THE CONTROL ONE-LINE DIAGRAMS

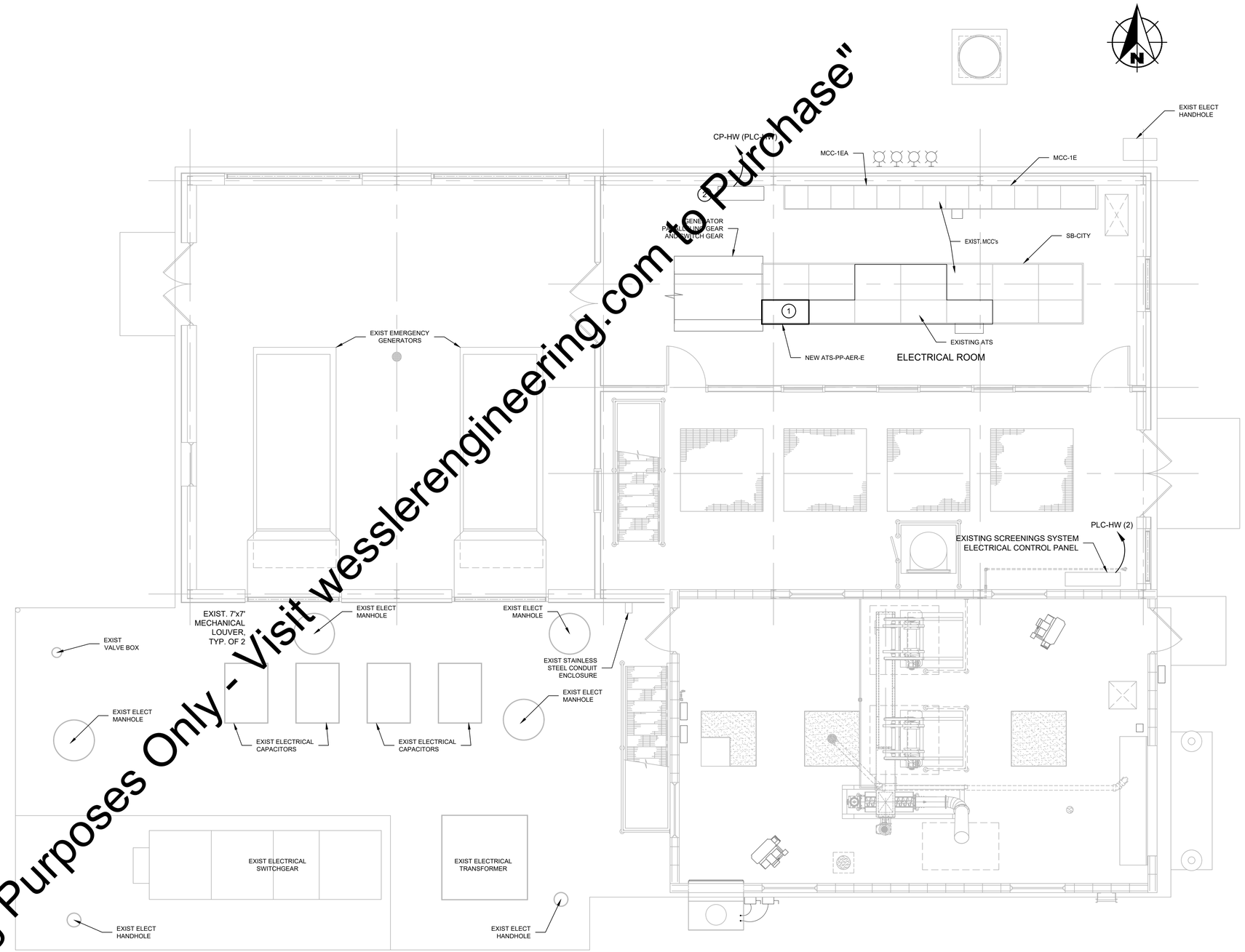

MAIN LEVEL ELECTRICAL MODIFICATIONS PLAN

0 2 4 8 FT
1/4"=1'-0"

"For Vewing Purposes Only - Visit wesslerengineering.com to Purchase"

SCALE VERIFICATION	DRAWN BY	EAS
BAR IS ONE INCH LONG ON ORIGINAL DRAWING	CHECKED BY	WCM
	APPROVED BY	WCM
	ISSUE DATE	MARCH 2020
	PROJECT NUMBER	193216-04-001

NO.	DATE	INITIALS	REVISION DESCRIPTIONS

WAYNE C. MOORE REGISTERED No. 10707476 STATE OF INDIANA PROFESSIONAL ENGINEER 03/04/2020

WESSLER ENGINEERING
More than a Project™

WASTEWATER SYSTEM EXPANSION
CITY OF FRANKFORT, INDIANA
CONTRACT A - WASTEWATER TREATMENT PLANT

EXISTING HEADWORKS STRUCTURE - ELECTRICAL PLAN

SHEET NO. **3E1**

PAGE NO. 33

Drawing: J:\Frankfort\Projects\193216 Frankfort WWTP Exp\CAD 04-001\DWG\Sheets\Area 3 - HW\3E HW EL.dwg | Layout: 3E1 | Plotted: 03/04/20 @ 11:15:56 | LastSavedBy: CurtisG

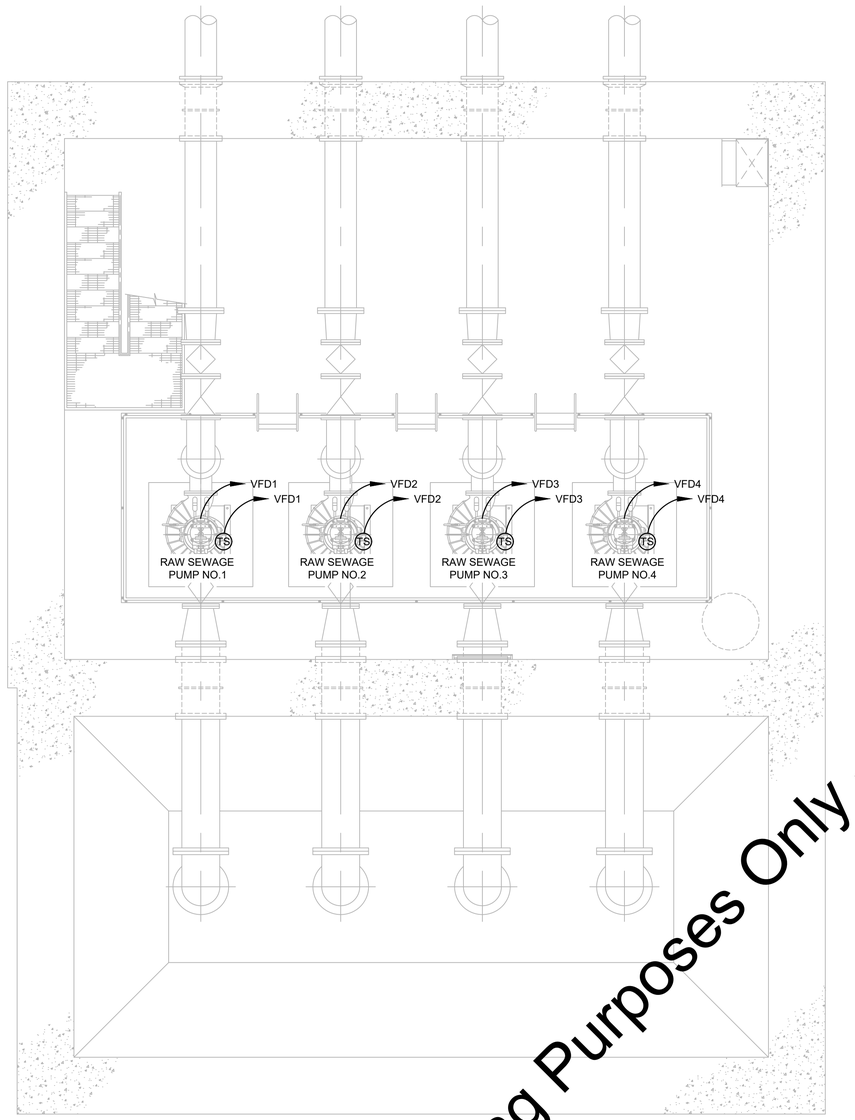

LOWER LEVEL ELECTRICAL MODIFICATIONS PLAN

0 2 4 6 8 1/4"=1'-0"

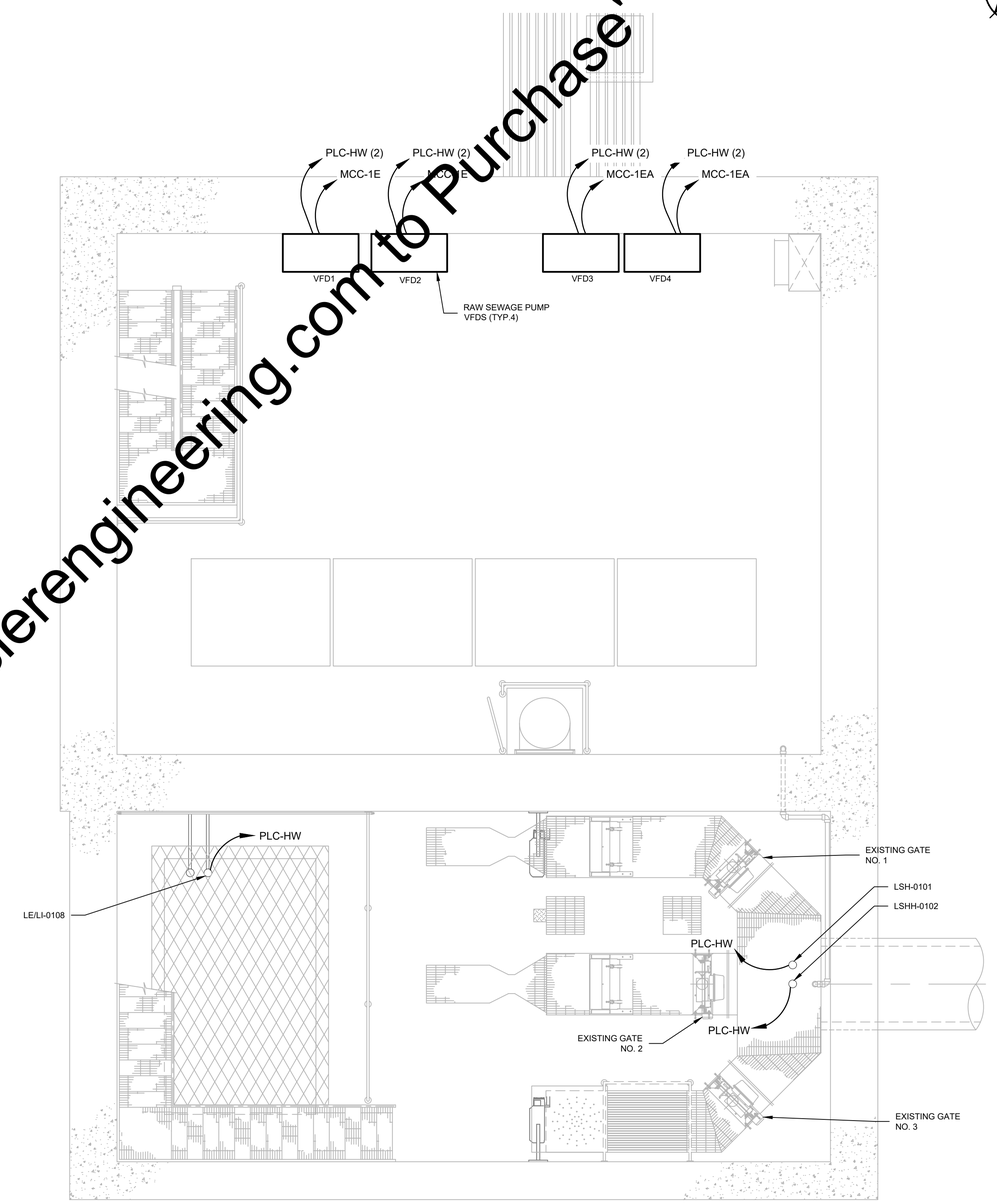

MID LEVEL ELECTRICAL MODIFICATIONS PLAN

0 2 4 6 8 1/4"=1'-0"

"For Viewing Purposes Only - Visit wesslerengineering.com to Purchase"

SCALE VERIFICATION	DRAWN BY	EAS
BAR IS ONE INCH LONG ON ORIGINAL DRAWING	CHECKED BY	WCM
	APPROVED BY	WCM
	ISSUE DATE	MARCH 2020
	PROJECT NUMBER	193216-04-001

NO.	DATE	INITIALS	REVISION DESCRIPTIONS

WAYNE C. MOORE REGISTERED No. 10707476 STATE OF INDIANA PROFESSIONAL ENGINEER 03/04/2020

WESSLER ENGINEERING
More than a Project™

WASTEWATER SYSTEM EXPANSION

CITY OF FRANKFORT, INDIANA
CONTRACT A - WASTEWATER TREATMENT PLANT

EXISTING HEADWORKS STRUCTURE - MOTOR LEVEL POWER PLAN

SHEET NO.
3E2

PAGE NO.
34

Drawing: J:\Frankfort\Projects\193216 Frankfort WWTP Exp\CAD 04-001\DWG\Sheets\Area 3 - HW\3E HW EL.dwg | Layout: 3E2 | Plotted: 03/04/20 @ 11:16:48 | LastSavedBy: CurtisG

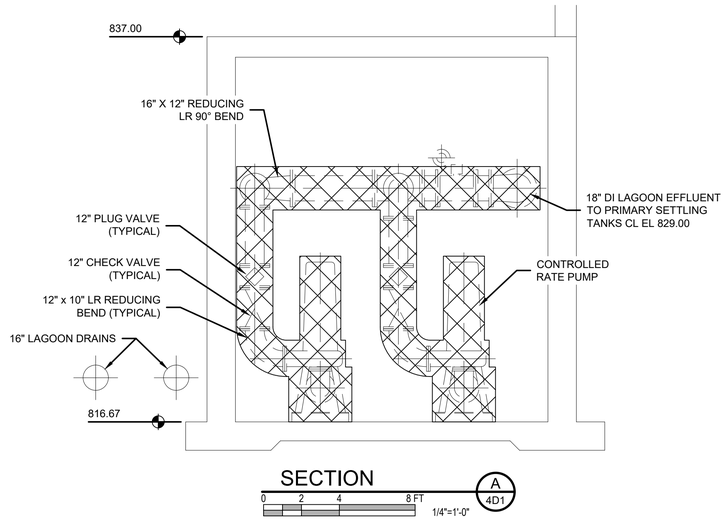

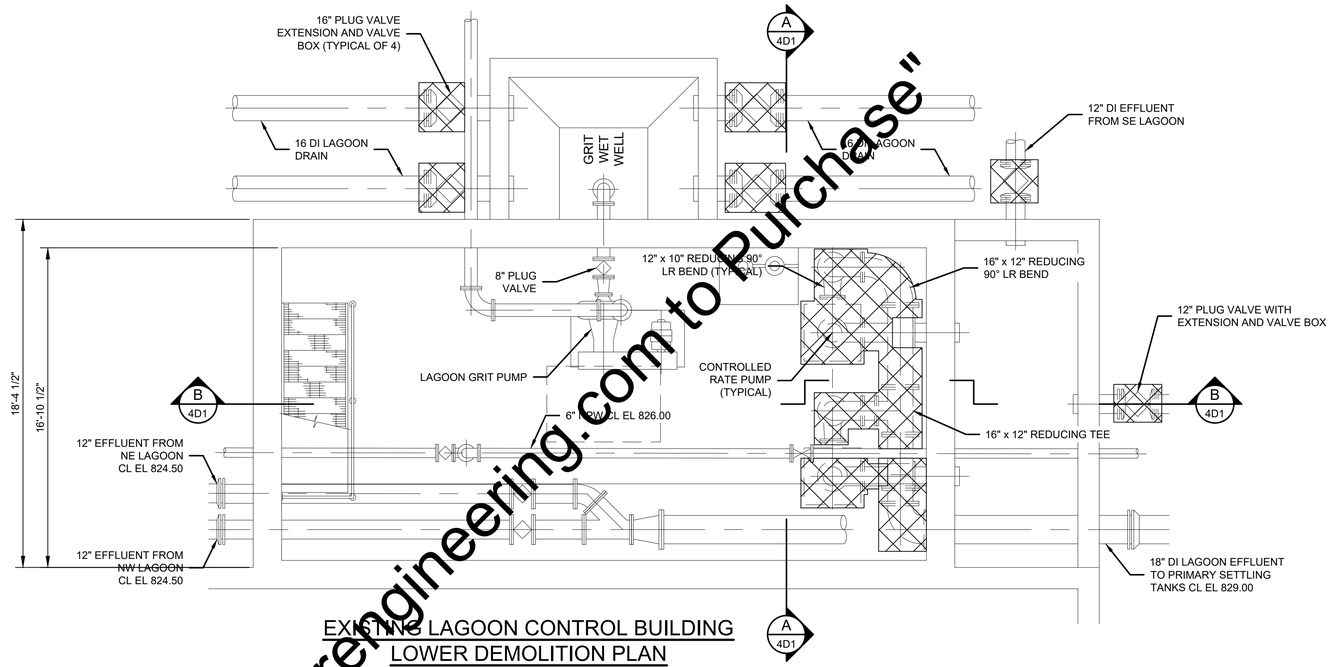

EXISTING LAGOON CONTROL BUILDING
LOWER DEMOLITION PLAN
SCALE: 1/4" = 1'-0"

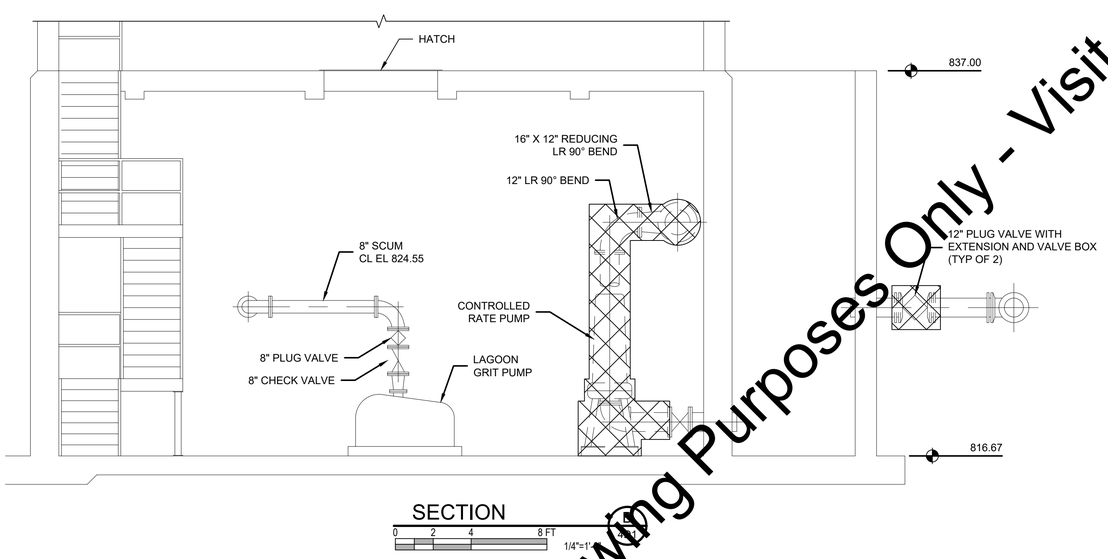

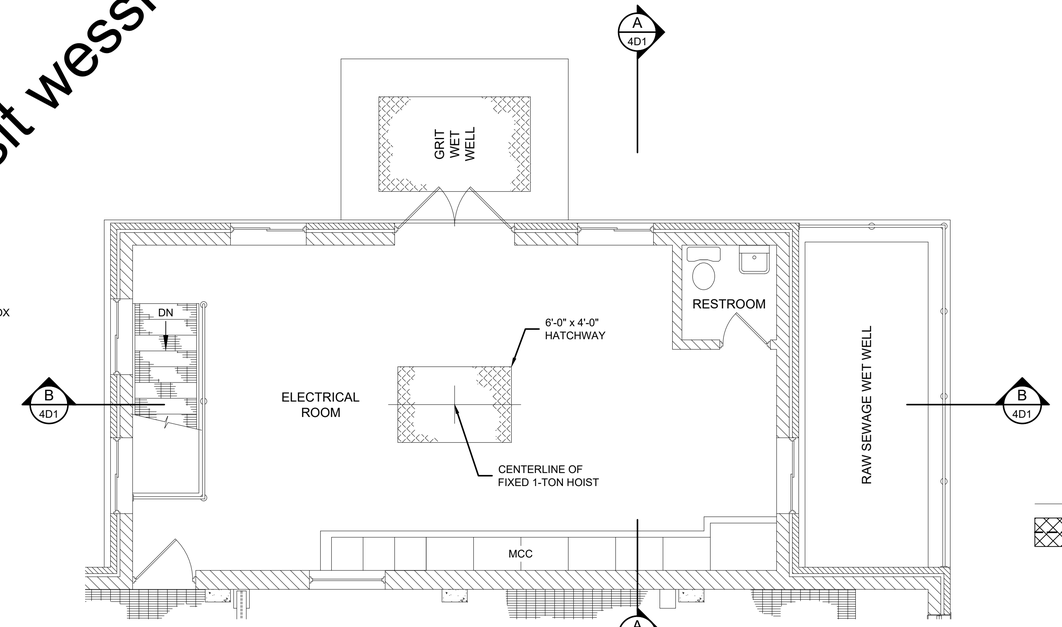

EXISTING LAGOON CONTROL BUILDING
UPPER DEMOLITION PLAN
SCALE: 1/4" = 1'-0"

LEGEND

- EXISTING FEATURES TO REMAIN
- EXISTING FEATURES TO BE DEMOLISHED

"For Viewing Purposes Only - Visit wesslerengineering.com to Purchase"

SCALE VERIFICATION	DRAWN BY	TWH
BAR IS ONE INCH LONG ON ORIGINAL DRAWING	CHECKED BY	KLT
	APPROVED BY	RWH
	ISSUE DATE	MARCH 2020
	PROJECT NUMBER	193216-04-001

REV. NO.	DATE	INITIALS	REVISION DESCRIPTIONS

ROBERT W. HOLDEN, II REGISTERED No. 10000096 STATE OF INDIANA PROFESSIONAL ENGINEER 03/04/2020

WESSLER ENGINEERING
More than a Project™

WASTEWATER SYSTEM EXPANSION
CITY OF FRANKFORT, INDIANA
CONTRACT A - WASTEWATER TREATMENT PLANT

EXISTING FLOW EQUALIZATION LAGOONS CONTROL BUILDING DEMOLITION PLANS AND SECTIONS

SHEET NO. **4D1**

PAGE NO. 35

Drawing: J:\Frankfort\Projects\193216 Frankfort WWTP Exp\CAD 04-001\DWG\Sheets\Area 4 - EX-EQ-LG\4D2 LAGOON CONTROL BUILDING DEMO PLANS AND SECTIONS.dwg | Layout: 4D1 LAGOON CONTROL BUILDING DEMO PLANS AND SECTIONS | Plotted: 02/28/20 @ 10:45:08 | LastSavedBy: JasonW

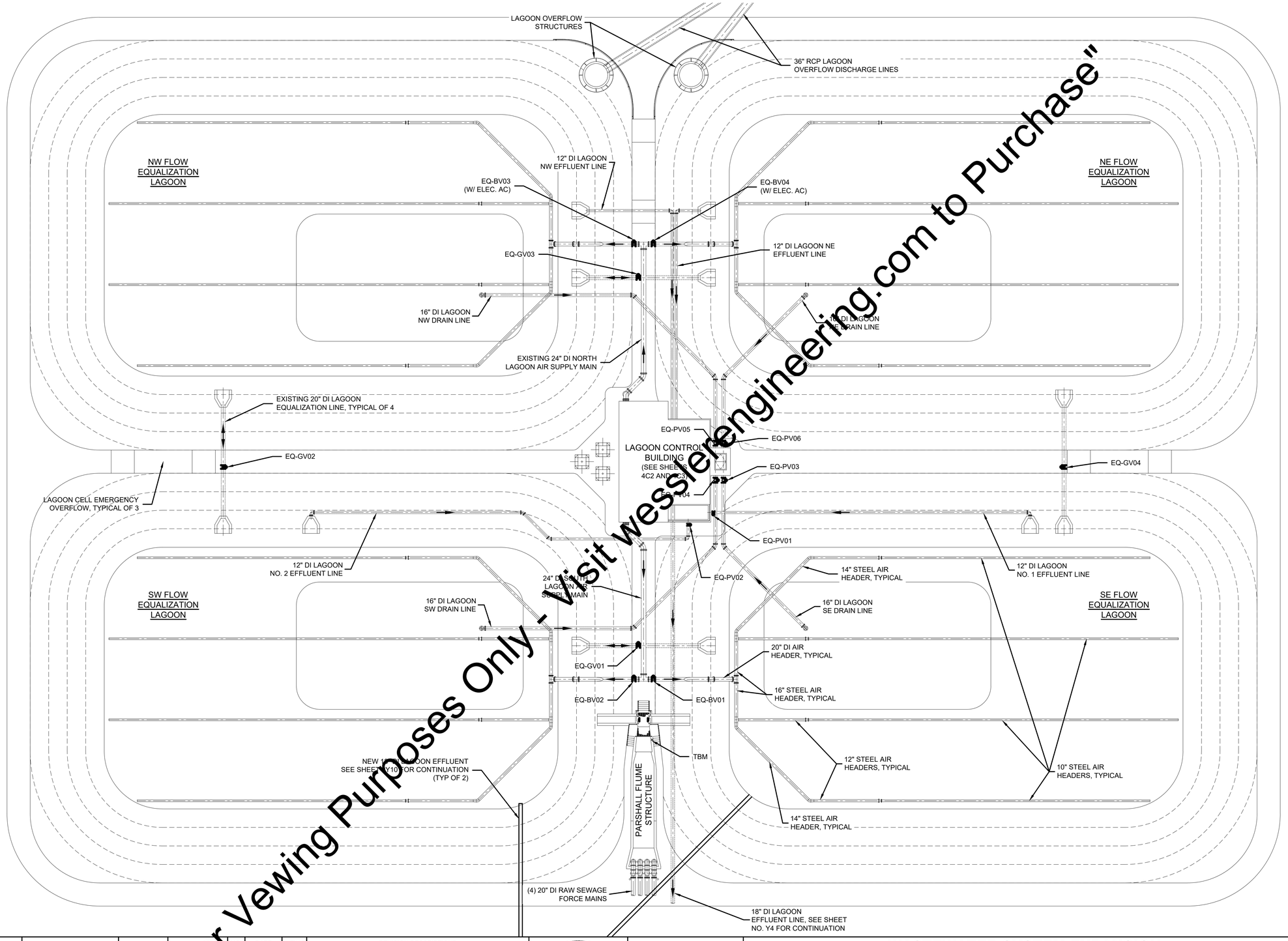

"For Viewing Purposes Only - Visit wesslerengineering.com to Purchase"

LEGEND

EXISTING FEATURES

NEW FEATURES

SCALE VERIFICATION	DRAWN BY	TWC
BAR IS ONE INCH LONG ON ORIGINAL DRAWING	CHECKED BY	KLT
	APPROVED BY	RWH
	ISSUE DATE	MARCH 2020
	PROJECT NUMBER	193216-04-001

NO.	DATE	INITIALS	REVISION DESCRIPTIONS

ROBERT W. HOLDEN II REGISTERED No. 10000096 STATE OF INDIANA PROFESSIONAL ENGINEER 03/04/2020

WESSLER ENGINEERING
More than a Project™

WASTEWATER SYSTEM EXPANSION

CITY OF FRANKFORT, INDIANA
CONTRACT A - WASTEWATER TREATMENT PLANT

FLOW EQUALIZATION LAGOONS - MODIFICATION PLAN

SHEET NO. **4C1**

PAGE NO. 36

Drawing: J:\Frankfort\Projects\193216 Frankfort WWTP Exp\CAD 04-001\DWG\Sheets\Area 4 - EX-EQ-LG\4C1 FLOW EQUALIZATION LAGOONS - MODIFICATION PLAN.dwg | Layout: 4C1 FLOW EQUALIZATION LAGOONS - MODIFICATION PLAN | Plotted: 02/28/20 @ 10:45:23 | LastSavedBy: TravisL

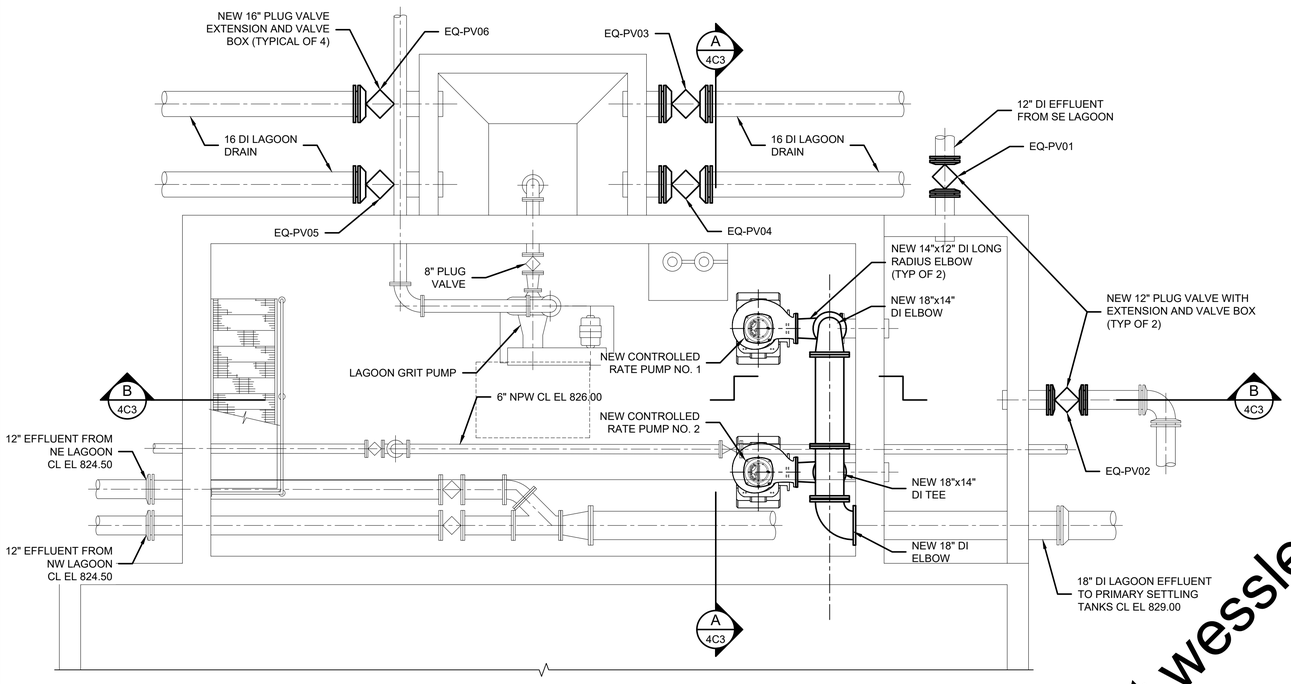

LOWER LEVEL PLAN

0 2 4 8 FT 1/4"=1'-0"

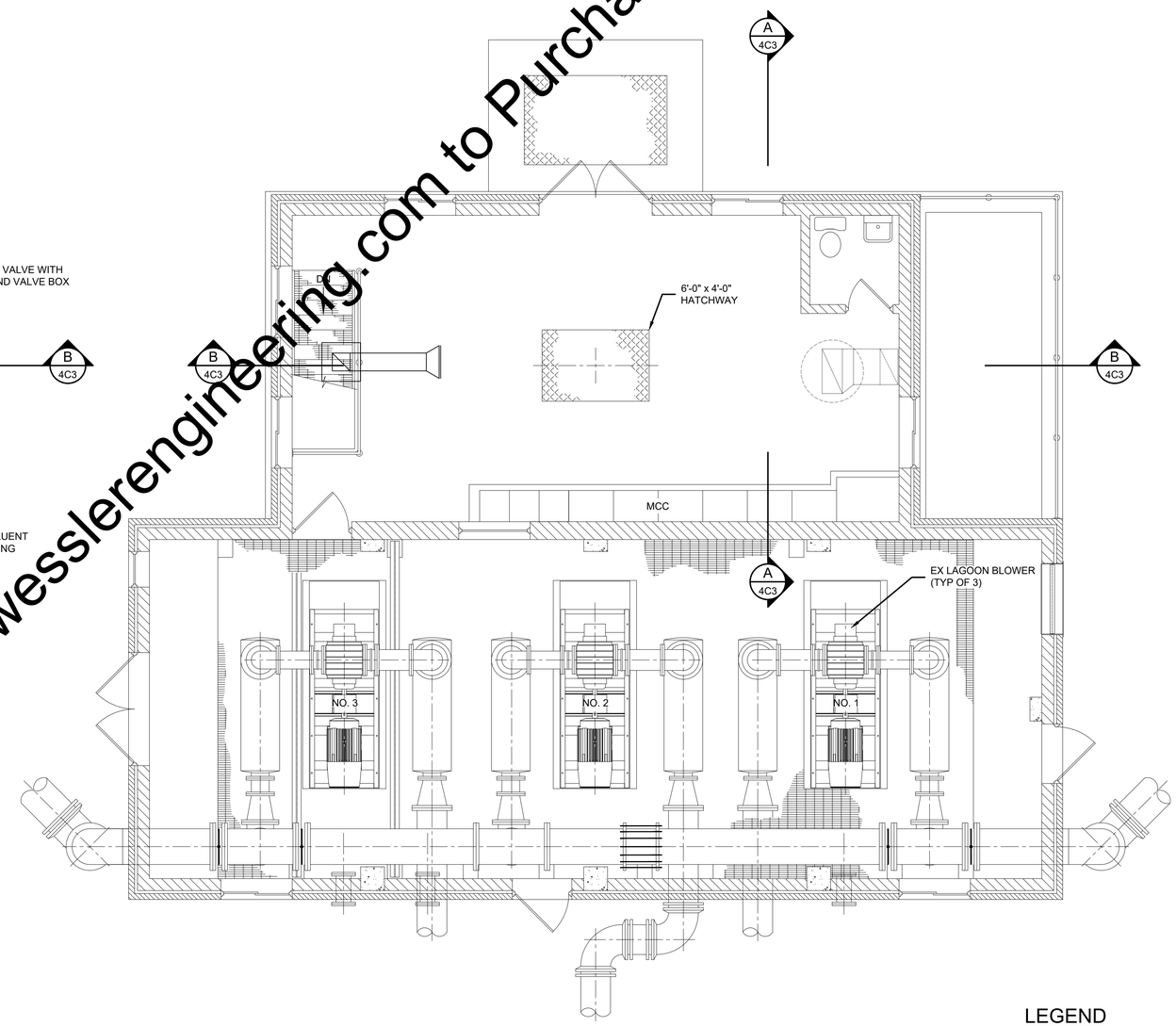

UPPER LEVEL PLAN

0 2 4 8 FT 1/4"=1'-0"

LEGEND

EXISTING FEATURES

NEW FEATURES

"For Vewing Purposes Only - Visit wesslerengineering.com to Purchase"

SCALE VERIFICATION	DRAWN BY	DLC
BAR IS ONE INCH LONG ON ORIGINAL DRAWING	CHECKED BY	KLT
	APPROVED BY	RWH
	ISSUE DATE	MARCH 2020
	PROJECT NUMBER	193216-04-001

NO.	DATE	INITIALS	REVISION DESCRIPTIONS

ROBERT W. HOLDEN, II REGISTERED No. 10000096 STATE OF INDIANA PROFESSIONAL ENGINEER 03/04/2020

WESSLER ENGINEERING
More than a Project™

WASTEWATER SYSTEM EXPANSION

CITY OF FRANKFORT, INDIANA
CONTRACT A - WASTEWATER TREATMENT PLANT

LAGOON CONTROL BUILDING - MODIFICATION PLANS

SHEET NO. **4C2**

PAGE NO. 37

Drawing: J:\Frankfort\Projects\193216 Frankfort WWTP Exp\CAD 04-001\DWG\Sheets\Area 4 - EX-EQ-LG\4C1 FLOW EQUALIZATION LAGOONS - MODIFICATION PLAN.dwg | Layout: 4C2 LAGOON CONTROL BUILDING - MODIFICATION PLANS | Plotted: 03/04/20 @ 05:14:02 | LastSavedBy: TravisL

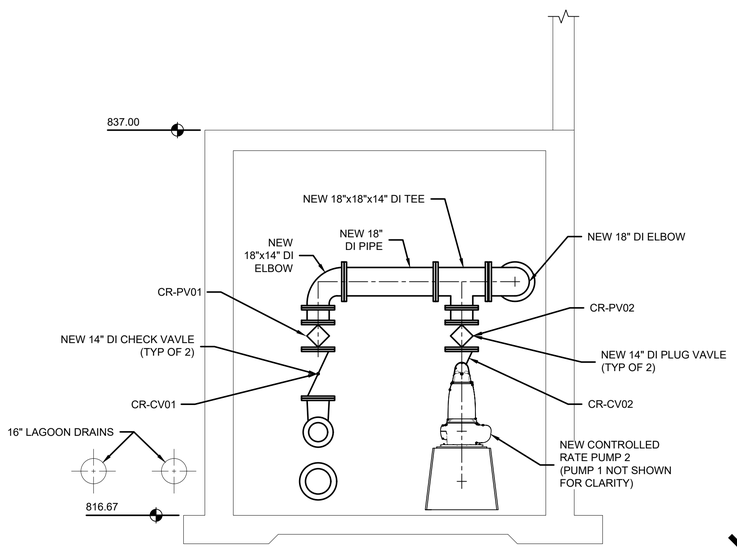

SECTION A 4C2

0 2 4 8 FT 1/4"=1'-0"

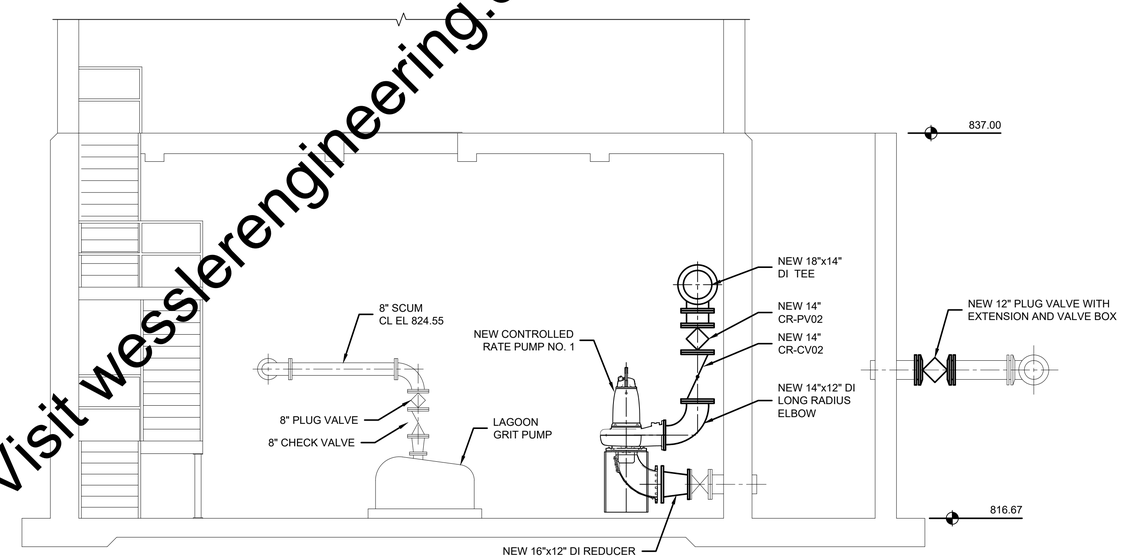

SECTION B 4C2

0 2 4 8 FT 1/4"=1'-0"

"For Vewing Purposes Only - Visit wesslerengineering.com to Purchase"

SCALE VERIFICATION	DRAWN BY	DLC
BAR IS ONE INCH LONG ON ORIGINAL DRAWING	CHECKED BY	MLT
	APPROVED BY	RWH
	ISSUE DATE	MARCH 2020
	PROJECT NUMBER	193216-04-001

NO.	DATE	INITIALS	REVISION DESCRIPTIONS

ROBERT W. HOLDEN, II REGISTERED No. 10000096 STATE OF INDIANA PROFESSIONAL ENGINEER 03/04/2020

WESSLER ENGINEERING
More than a Project™

WASTEWATER SYSTEM EXPANSION

CITY OF FRANKFORT, INDIANA
CONTRACT A - WASTEWATER TREATMENT PLANT

LAGOON CONTROL BUILDING - MODIFICATION SECTIONS

SHEET NO. **4C3**

PAGE NO. 38

Drawing: J:\Frankfort\Projects\193216 Frankfort WWTP Exp\CAD 04-001\DWG\Sheets\Area 4 - EX-EQ-LG\4C1 FLOW EQUALIZATION LAGOONS - MODIFICATION PLAN.dwg | Layout: 4C3 LAGOON CONTROL BUILDING - MODIFICATIONS SECTIONS | Plotted: 02/28/20 @ 10:45:45 | LastSavedBy: TravisL

NOTE:
DIMENSIONS SHOWN ARE APPROXIMATE

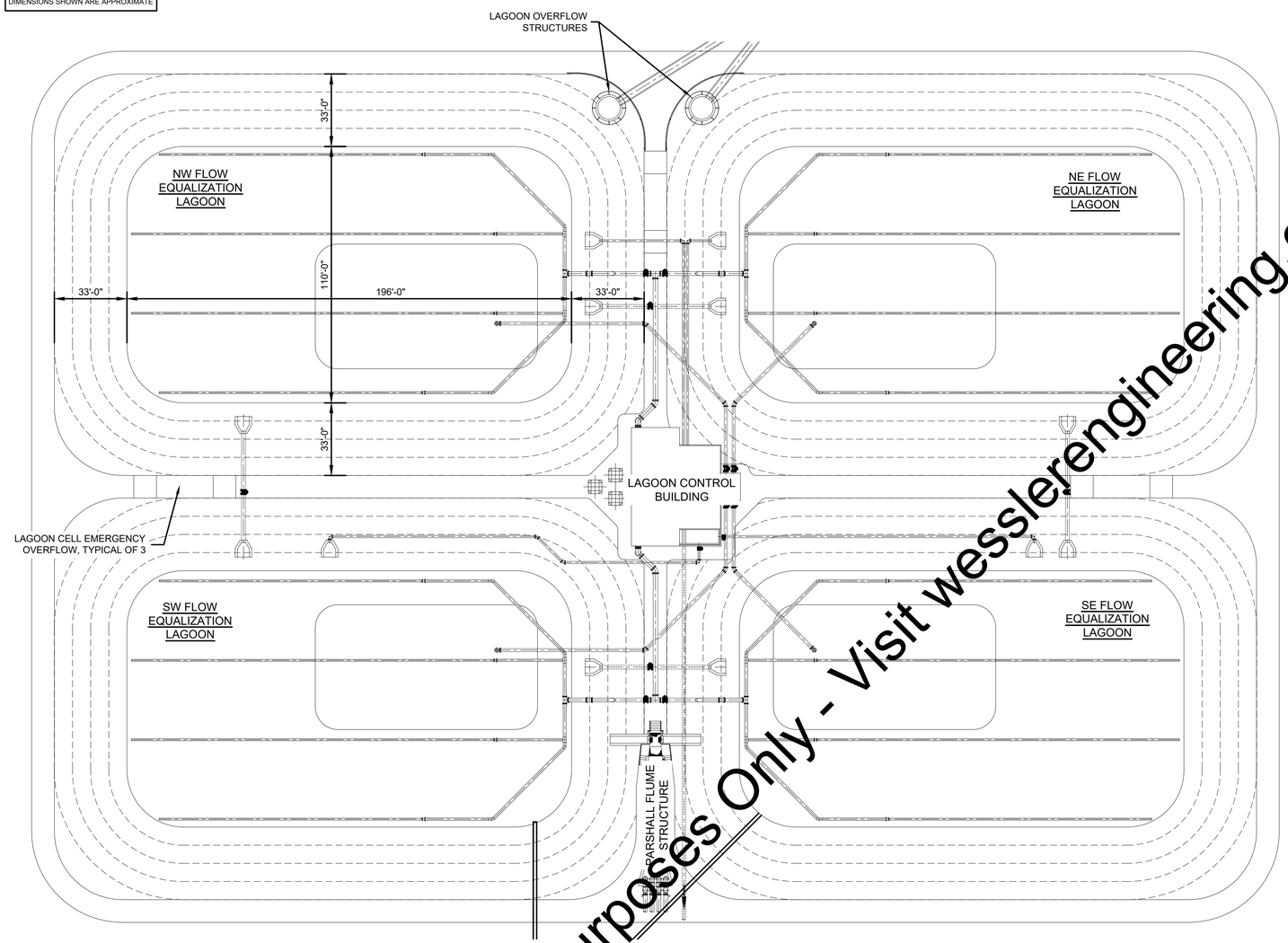

PLAN VIEW
SCALE: 1" = 30'

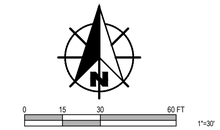

CONCRETE REPAIR:

1. DO NOT FEATHER EDGE CONCRETE REPAIR.
2. HORIZONTAL LIMITS OF CONCRETE REPAIR WILL BE DETERMINED BY THE CONTRACTOR BY SOUNDING AND SHALL BE VERIFIED BY THE ENGINEER.
3. ALL CONCRETE REPAIRS ARE FULL DEPTH REPLACEMENT WITH CONCRETE. DEPTH OF CONCRETE IS TO BE ASSUMED TO BE 6 INCHES.
4. LIMITS OF THE REPAIR AREA ARE TO BE SAW CUT TO A MINIMUM DEPTH OF 1 INCH TO PROVIDE A UNIFORM EDGE. EDGES OF REPAIR AREA SHALL HAVE A SQUARE OR PREFERABLY SLIGHTLY UNDERCUT SHOULDER.
5. USE ONLY PNEUMATIC OR HAND TOOLS FOR REMOVAL OF CONCRETE. ONLY POINTED TOOLS AND CHISEL POINTS NO WIDER THAN 3/4 INCH ARE PERMITTED. BUSH HAMMERING IS NOT PERMITTED. THIS IS INTENDED FOR SMALL AREAS OF REPAIR.
6. MAINTAIN EXISTING CONCRETE JOINTS ADJACENT TO REPAIR.
7. SURFACES TO RECEIVE NEW CONCRETE SHALL BE THOROUGHLY CLEANED OF ALL DIRT, DUST, AND FOREIGN MATERIALS USING WIRE BRUSH, WATER OR AIR PRESSURE.
8. SURFACE SHALL BE DRENCHED WITH WATER AND ALLOWED TO DRY.
9. FINISH AND CURE CONCRETE IN ACCORDANCE WITH THE SPECIFICATION.
10. QUANTITIES - USE 20 SQUARE FEET OF CONCRETE REPAIR PER LAGOON FOR A TOTAL OF 80 SQ FT.CONTRACTOR IS TO INCLUDE THIS PRICE AND QUANTITY IN THE LUMP SUM COST FOR THE PROJECT.

CONCRETE JOINT REPAIR - SEALANT

1. CLEAN ALL JOINTS. REMOVE ALL VEGETATION.
2. ROUT OUT JOINT AND REMOVE DEBRIS.
3. PREPARE JOINT IN ACCORDANCE WITH SEALANT MANUFACTURER'S PUBLISHED INSTRUCTIONS.
4. INSTALL BACKER ROD AND SEALANT FOLLOWING MANUFACTURER'S PUBLISHED INSTRUCTIONS.
5. QUANTITIES - USE 3500 LF OF JOINT REPAIR PER LAGOON FOR A TOTAL OF 14,000 LF.CONTRACTOR IS TO INCLUDE THIS PRICE AND QUANTITY IN THE LUMP SUM COST FOR THE PROJECT.

"For Vewing Purposes Only - Visit wesslerengineering.com to Purchase"

SCALE VERIFICATION	DRAWN BY	TW
BAR IS ONE INCH LONG ON ORIGINAL DRAWING	CHECKED BY	JRB
	APPROVED BY	JRB
	ISSUE DATE	MARCH 2020
	PROJECT NUMBER	193216-04-001

NO.	DATE	INITIALS	REVISION DESCRIPTIONS

JEFFREY ROSS BALLARD REGISTERED No. 60860191 STATE OF INDIANA PROFESSIONAL ENGINEER 03/04/2020

WESSLER ENGINEERING
More than a Project™

WASTEWATER SYSTEM EXPANSION
CITY OF FRANKFORT, INDIANA
CONTRACT A - WASTEWATER TREATMENT PLANT

FLOW EQUALIZATION LAGOONS - STRUCTURAL REPAIR PLAN

SHEET NO. **4S1**
PAGE NO. 39

Drawing: J:\Frankfort\Projects\193216 Frankfort WWTP Exp\CAD 04-001\DWG\Sheets\Area 4 - EX-EQ-LG\4S1 FLOW EQUALIZATION LAGOONS - STRUCTURAL REPAIR PLAN.dwg | Layout: 4S1 | Plotted: 02/28/20 @ 10:46:00 | LastSavedBy: TravisL

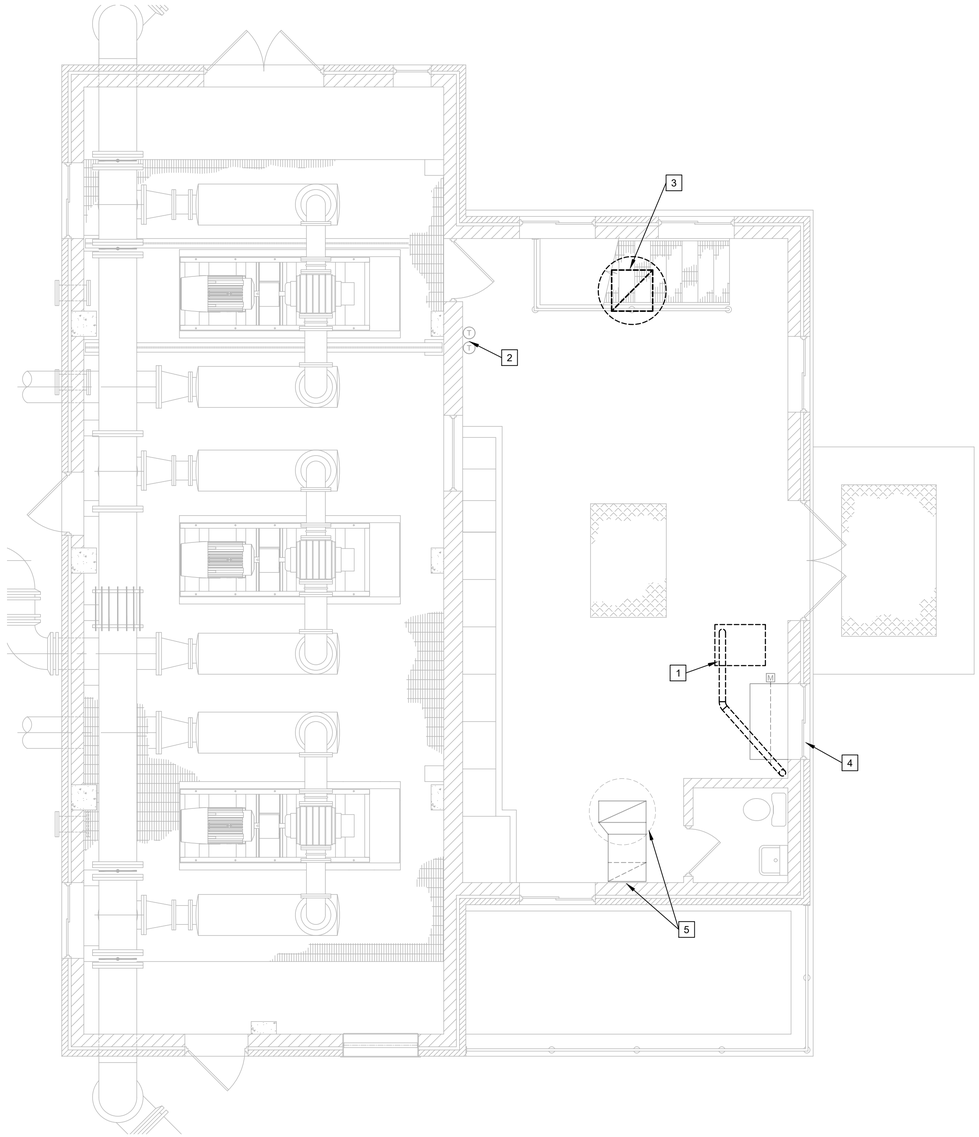

MAIN LEVEL MECHANICAL DEMOLITION PLAN
SCALE: 1/4" = 1'-0"

GENERAL NOTES:

1. REFER TO DRAWING 1M1 FOR ADDITIONAL GENERAL NOTES.

DEMOLITION NOTES:

1. REMOVE EXISTING RESIDENTIAL STYLE FURNACE COMPLETE INCLUDING DUCTWORK, GAS PIPING BACK TO SOURCE, ELECTRICAL BACK TO SOURCE, FLUE UP THROUGH ROOF AND PATCH, ACCESSORIES AND CONTROLS.
2. REMOVE EXISTING CONTROLS SERVING NORTH EXHAUST FAN AND FURNACE - PATCH WALL TO MATCH EXISTING.
3. REMOVE EXISTING EXHAUST GRILLE AND DUCTWORK COMPLETE. PROVIDE TEMPORARY PATCH PANEL UNTIL NEW WORK IS COMPLETE.
4. EXISTING LOUVER AND DAMPER TO REMAIN IN SERVICE.
5. EXISTING EXHAUST SYSTEM TO REMAIN IN SERVICE.

Applied Engineering Services
5975 Castle Creek Parkway N Drive, Suite 300 • Indianapolis, Indiana 46250
Tel: 317.810.4141 • Fax: 317.810.4140 • www.applied-e-s.com

SCALE VERIFICATION	DRAWN BY	DaM
BAR IS ONE INCH LONG ON ORIGINAL DRAWING	CHECKED BY	DTM
	APPROVED BY	DTM
	ISSUE DATE	FEBRUARY 2020
	PROJECT NUMBER	193216-04-001

NO.	DATE	INITIALS	REVISION DESCRIPTIONS

DANIEL THOMAS MILES
REGISTERED
No. PE10302029
STATE OF INDIANA
PROFESSIONAL ENGINEER
02/28/2020

WESSLER ENGINEERING
More than a Project™

WASTEWATER SYSTEM EXPANSION
CITY OF FRANKFORT, INDIANA
CONTRACT A - WASTEWATER TREATMENT PLANT

LAGOON CONTROL BUILDING
UPPER LEVEL MECHANICAL DEMOLITION PLAN

SHEET NO.
4M1

PAGE NO.
40

Drawing: G:\Projects\19-141 Wessler - City of Frankfort WWTP Expansion HVAC Design\Cadd\19-141-4M1.dwg | Layout: Layout1 | Plotted: 02/24/20 @ 05:11:59 | LastSavedBy: dmarshall

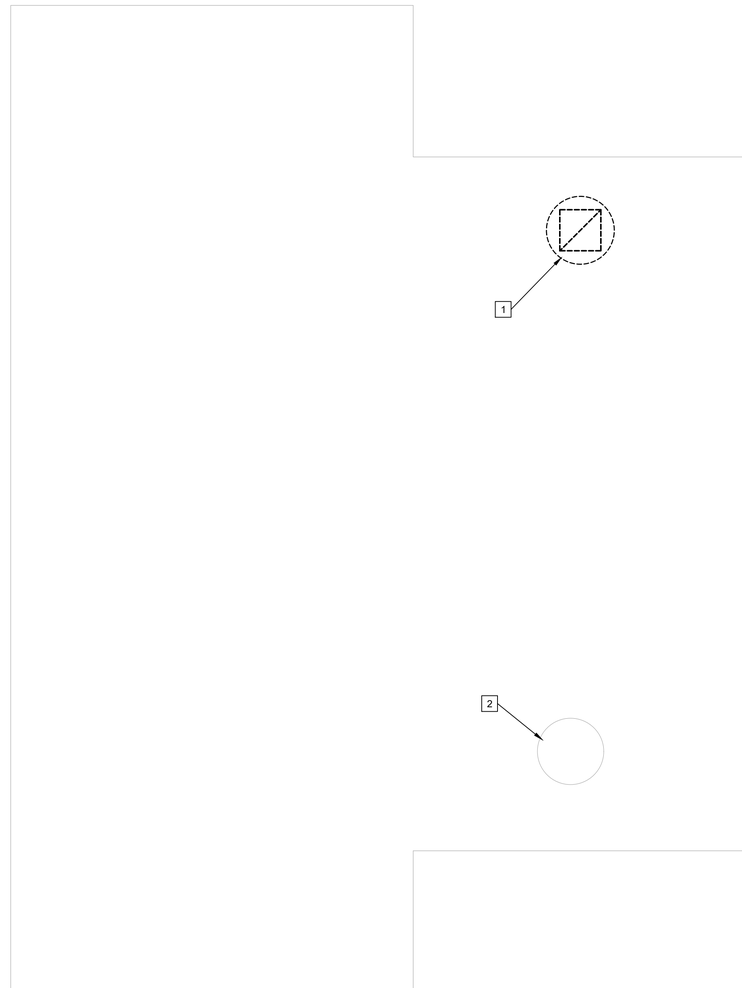

ROOF MECHANICAL DEMOLITION PLAN

SCALE: 1/4" = 1'-0"

GENERAL NOTES:

1. REFER TO DRAWING 1M1 FOR ADDITIONAL GENERAL NOTES.

DEMOLITION NOTES:

1. REMOVE EXISTING ROOF MOUNTED EXHAUST FAN COMPLETE INCLUDING CURB, DUCTWORK, GRILLE AND CONTROLS BACK TO SOURCE.
2. EXISTING ROOF EXHAUST FAN TO REMAIN IN SERVICE.

Applied Engineering Services
5975 Castle Creek Parkway N Drive, Suite 300 • Indianapolis, Indiana 46250
Tel: 317.810.4141 • Fax: 317.810.4140 • www.applied-e-s.com

SCALE VERIFICATION

BAR IS ONE INCH LONG ON ORIGINAL DRAWING

DRAWN BY	DaM
CHECKED BY	DTM
APPROVED BY	DTM
ISSUE DATE	FEBRUARY 2020
PROJECT NUMBER	193216-04-001

NO.	DATE	INITIALS	REVISION DESCRIPTIONS

DANIEL THOMAS MILES REGISTERED No. PE10302029 STATE OF INDIANA PROFESSIONAL ENGINEER 02/28/2020

WESSLER ENGINEERING
More than a Project™

WASTEWATER SYSTEM EXPANSION

CITY OF FRANKFORT, INDIANA
CONTRACT A - WASTEWATER TREATMENT PLANT

LAGOON CONTROL BUILDING
ROOF MECHANICAL DEMOLITION PLAN

SHEET NO.
4M2

PAGE NO.
41

Drawing: G:\Projects\19-141 Wessler - City of Frankfort WWTP Expansion HVAC Design\Cadd\19-141-4M2.dwg | Layout: Layout1 | Plotted: 02/24/20 @ 05:11:54 | LastSavedBy: dmarshall

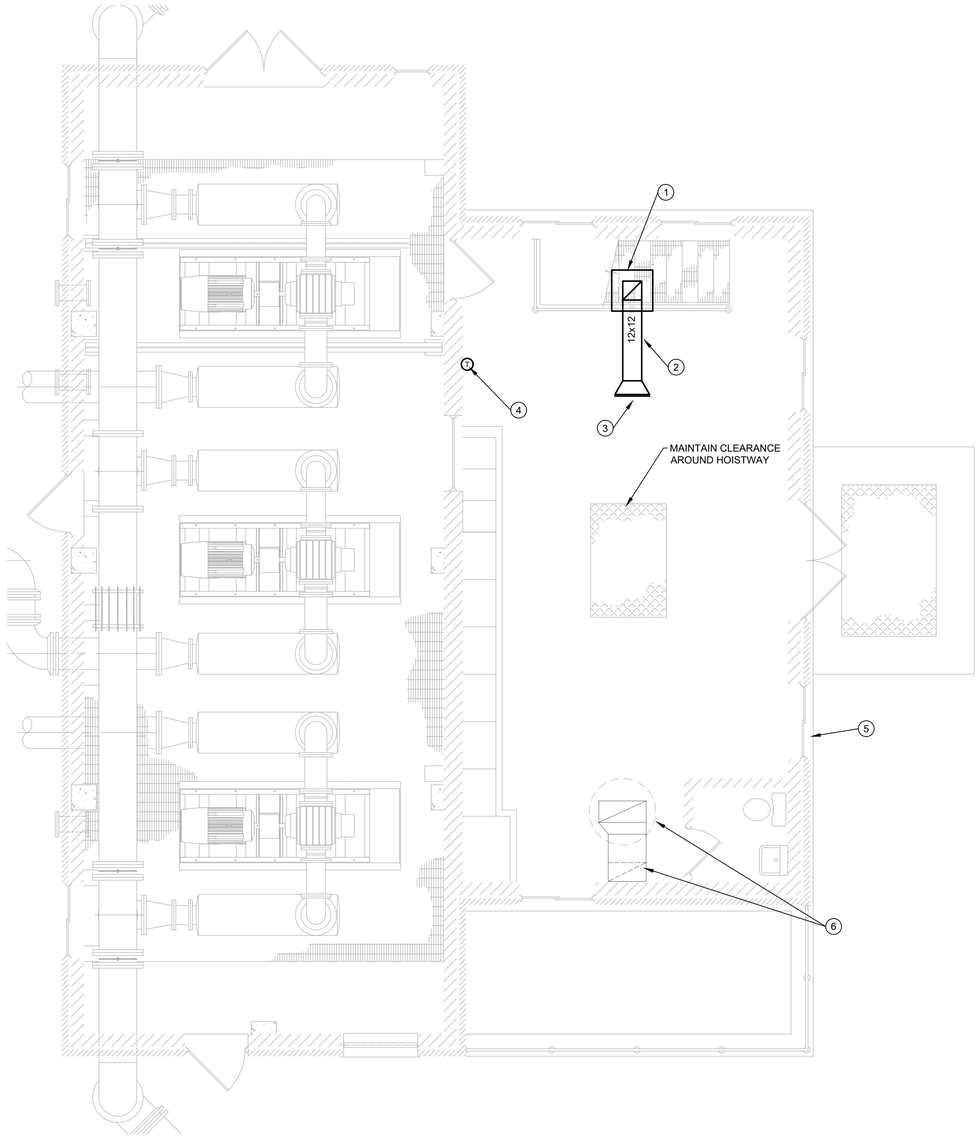

MAIN LEVEL MECHANICAL PLAN

SCALE: 1/4" = 1'-0"

GENERAL NOTES:

1. REFER TO DRAWING 1M1 FOR ADDITIONAL GENERAL NOTES.

PLAN NOTES:

1. PROVIDE INSULATED METAL CLOSURE PLATE AT EXISTING OPENING IN CEILING DECK. SEAL TO DECK AND TO NEW DUCTWORK.
2. ROUTE TIGHT TO DECK - INSULATE WITH 1 1 /2" RIGID FIBERGLASS WITH FSK COVERING.
3. TRANSITION TO 16x14 AND PROVIDE DOUBLE DEFLECTION SUPPLY GRILLE - BALANCE TO 800 CFM.
4. NEW 7 DAY PROGRAMMABLE THERMOSTAT TO SERVE AHU-LCB-1
5. EXISTING LOUVER AND DAMPER TO REMAIN IN SERVICE.
6. EXISTING EXHAUST SYSTEM SERVING LOWER LEVEL TO REMAIN IN SERVICE.

Applied Engineering Services
5975 Castle Creek Parkway N Drive, Suite 300 • Indianapolis, Indiana 46250
Tel: 317.810.4141 • Fax: 317.810.4140 • www.applied-e-s.com

SCALE VERIFICATION

BAR IS ONE INCH LONG ON ORIGINAL DRAWING

DRAWN BY	DaM
CHECKED BY	DTM
APPROVED BY	DTM
ISSUE DATE	FEBRUARY 2020
PROJECT NUMBER	193216-04-001

NO.	DATE	INITIALS	REVISION DESCRIPTIONS

DANIEL THOMAS MILES REGISTERED No. PE10302029 STATE OF INDIANA PROFESSIONAL ENGINEER 02/28/2020

WESSLER ENGINEERING
More than a Project™

WASTEWATER SYSTEM EXPANSION

CITY OF FRANKFORT, INDIANA
CONTRACT A - WASTEWATER TREATMENT PLANT

LAGOON CONTROL BUILDING
UPPER LEVEL MECHANICAL PLAN

SHEET NO. **4M3**

PAGE NO. 42

Drawing: G:\Projects\19-141 Wessler - City of Frankfort WWTP Expansion HVAC Design\Cad\19-141-4M3.dwg | Layout: Layout1 | Plotted: 02/24/20 @ 05:11:49 | LastSavedBy: dmarshall

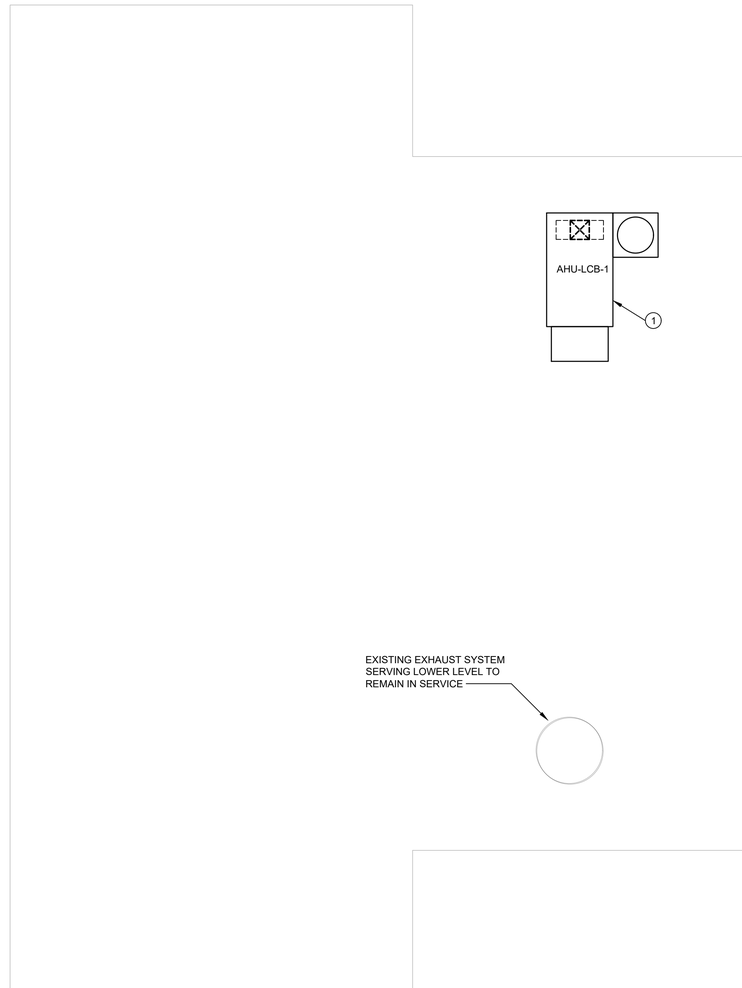

ROOF MECHANICAL PLAN
SCALE: 1/4" = 1'-0"

GENERAL NOTES:

1. REFER TO DRAWING 1M1 FOR ADDITIONAL GENERAL NOTES.
2. COORDINATE ALL OPENINGS THROUGH ROOFS, WALLS, FLOORS WITH STRUCTURAL DRAWINGS.

PLAN NOTES:

1. AHU-LCB-1 MOUNTED ON 18" CURB. COORDINATE LOCATION WITH EXISTING ROOF OPENING AND TRANSITION CURB AS REQUIRED TO FULLY COVER OPENING. PROVIDE INSULATED METAL PANEL OVER UNUSED PORTION OF OPENING. ROUTE ELECTRICAL AND CONTROLS WIRING UP THROUGH CURB. ROUTE CONDENSATE DRAIN IN PVC PIPING TO ROOF DRAIN OR GUTTER. SUPPORT PIPING FROM ROOF DECK. ALL CURB MATERIALS AND HARDWARE TO BE ALUMINUM, 316 STAINLESS, OR SPECIALLY COATED FOR CORROSION RESISTANCE. FLASH AND COUNTERFLASH CURB TO EXISTING ROOFING FOR WEATHERTIGHT SEAL. SECURE UNIT TO CURB WITH WIND CLIPS AND HARDWARE PROVIDED BY CURB MANUFACTURER.

Applied Engineering Services
5975 Castle Creek Parkway N Drive, Suite 300 • Indianapolis, Indiana 46250
Tel: 317.810.4141 • Fax: 317.810.4140 • www.applied-e-s.com

SCALE VERIFICATION	DRAWN BY	DaM
BAR IS ONE INCH LONG ON ORIGINAL DRAWING	CHECKED BY	DTM
	APPROVED BY	DTM
	ISSUE DATE	FEBRUARY 2020
	PROJECT NUMBER	193216-04-001

NO.	DATE	INITIALS	REVISION DESCRIPTIONS

DANIEL THOMAS MILES REGISTERED No. PE10302029 STATE OF INDIANA PROFESSIONAL ENGINEER 02/28/2020

WESSLER ENGINEERING
More than a Project™

WASTEWATER SYSTEM EXPANSION
CITY OF FRANKFORT, INDIANA
CONTRACT A - WASTEWATER TREATMENT PLANT

LAGOON CONTROL BUILDING
ROOF MECHANICAL PLAN

SHEET NO.
4M4

PAGE NO.
43

Drawing: G:\Projects\19-141 Wessler - City of Frankfort WWTP Expansion HVAC Design\Cadd\19-141-4M4.dwg | Layout: Layout1 | Plotted: 02/24/20 @ 05:11:39 | LastSavedBy: dmarshall

PACKAGED ROOFTOP UNIT SCHEDULE

TAG NO.	AREA SERVED	TYPE	DX COOLING COIL											ELEC HEAT SECTION					FAN										COMPRESSOR/CONDENSER							FILTERS			ELECTRICAL DATA				MFG.	MODEL #	WGT. LBS.	REMARKS
			CFM	OA CFM	TOTAL MBH	SEN. MBH	EADB	EAWB	LADB	LAWB	REFRIG. TYPE	SUCT. TEMP.	MAX FACE VEL.	MBH	KW	TEMP RISE	VOLTS/PH	MIN STEPS	FAN TYPE	DRIVE	NO. OF FANS	TOTAL SP	EXTERNAL SP	FAN RPM	WHEEL DIA.	MOTOR HP	MOTOR RPM	VOLT/PH	MIN. NO OF COMP	COMPRESSOR TYPE	MIN. STEPS OF UNLOADING	NO OF CONDENSER FANS	FAN TYPE	FAN HP EACH	DESIGN AMBIENT TEMP	NO.	TYPE	SIZE	MCA	MOP	EM POWER	CONTROL TYPE				
AHU-LCB-1	LAGOON CONTROL	PACKAGED RTU HEATING/COOLING	800	800	61.3	32.8	95.0	78.0	57.8	57.0	410A	42.5	460	86.4	25.0	100	460/3	SCR	PLENUM	DIRECT	1	3	1.25	3000	10	1.5	3600	460/3	1	SCROLL	MOD	1	RADIAL	1.0	95	1	PLEATED MERV 8	16x20	54.7	60		INTEGRAL DDC	INNOVENT	CAHU-800	1700	1,2,3

NOTES:
1. ALUMINUM AND STAINLESS STEEL CONSTRUCTION INCLUDING HARDWARE, SUPPORTS, ACCESSORIES, ETC. 2" DOUBLE WALL INSULATED CABINET INCLUDING FLOOR AND ROOF, FULL PERIMETER CURB WITH ALUMINUM CONSTRUCTION, WELDED ALUMINUM STRUCTURAL BASE, FANS AND COIIS INCLUDING CONDENSER TO HAVE BAKED EPOXY CORROSION RESISTANT COATING.
2. PROVIDE SELF CONTAINED CONTROLLER WITH SEQUENCES FOR CONTINUOUS FAN OPERATION, COOLING, HEATING, AND DEHUMIDIFICATION BASED ON SPACE MOUNTED THERMOSTAT AND UNIT MOUNTED HUMIDISTAT. CONTROL FOR DISCHARGE HUMIDITY BELOW 60% R.H.

RETURN AND EXHAUST GRILLE SCHEDULE

TAG NO.	NOMINAL FACE SIZE (IN.)	MIN. CORE AREA (SQ. FT.)	BRANCH DUCT SIZE TO GRILLE (IN.)	CFM RANGE	MAX. NC LEVEL	MAX. CORE VELOCITY (FPM)	MAX. VELOCITY PRESSURE (IN. W.C.)	MAX. TOTAL PRESSURE (IN. W. C.)	MFR.	MODEL NO.	REMARKS
SG	20X20	2.57	PER PLANS	1000-1200	18	500	0.016	0.04	TITUS	301FL	1,2
EG	20X20	2.57	PER PLANS	1000-1500	15	500	0.016	0.040	TITUS	350ZFL	2

NOTES:
1. DUAL DEFLECTION 3/4" BLADE SPACING.
2. ALUMINUM CONSTRUCTION BAKED ENAMAL PAINT - WHITE.

Applied Engineering Services
5975 Castle Creek Parkway N Drive, Suite 300 • Indianapolis, Indiana 46250
Tel: 317.810.4141 • Fax: 317.810.4140 • www.applied-e-s.com

SCALE VERIFICATION
BAR IS ONE INCH LONG ON ORIGINAL DRAWING

DRAWN BY	DaM
CHECKED BY	DTM
APPROVED BY	DTM
ISSUE DATE	FEBRUARY 2020
PROJECT NUMBER	193216-04-001

NO.	DATE	INITIALS	REVISION DESCRIPTIONS

DANIEL THOMAS MILES REGISTERED No. PE10302029 STATE OF INDIANA PROFESSIONAL ENGINEER 02/28/2020

WESSLER ENGINEERING
More than a Project™

WASTEWATER SYSTEM EXPANSION
CITY OF FRANKFORT, INDIANA
CONTRACT A - WASTEWATER TREATMENT PLANT

LAGOON CONTROL BUILDING
MECHANICAL DETAILS AND SCHEDULES

SHEET NO. **4M5**

Drawing: G:\Projects\19-141 Wessler - City of Frankfort WWTP Expansion HVAC Design\Cadd\19-141-4M5.dwg | Layout: Layout1 | Plotted: 02/24/20 @ 05:12:10 | LastSavedBy: dmarshall

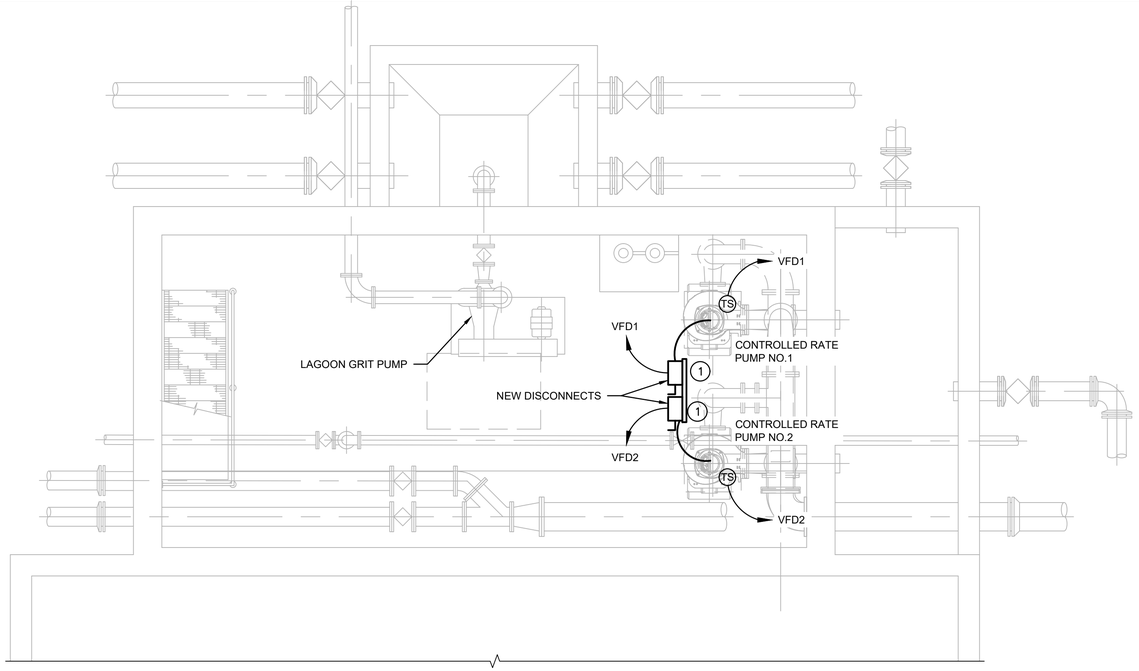

LOWER LEVEL ELECTRICAL PLAN

0 2 4 8 FT
1/4"=1'-0"

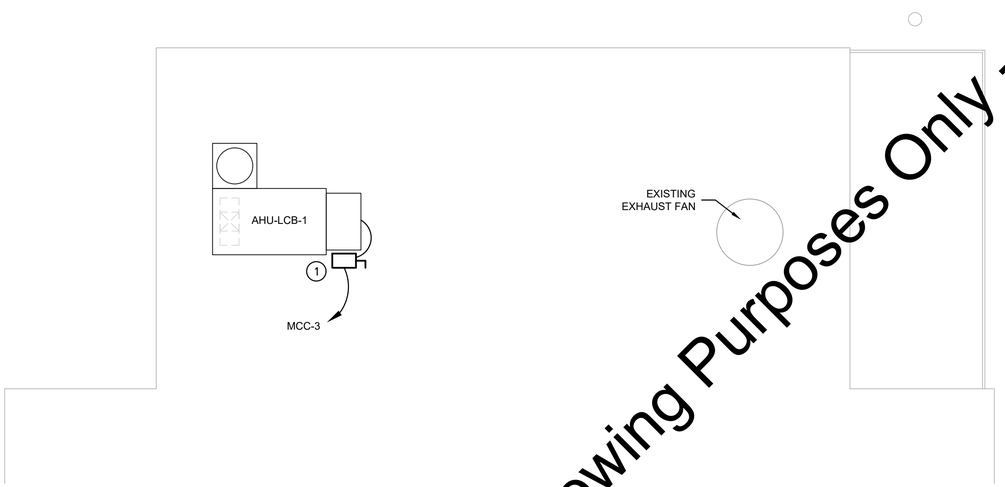

PARTIAL ROOF ELECTRICAL PLAN

0 2 4 8 FT
1/4"=1'-0"

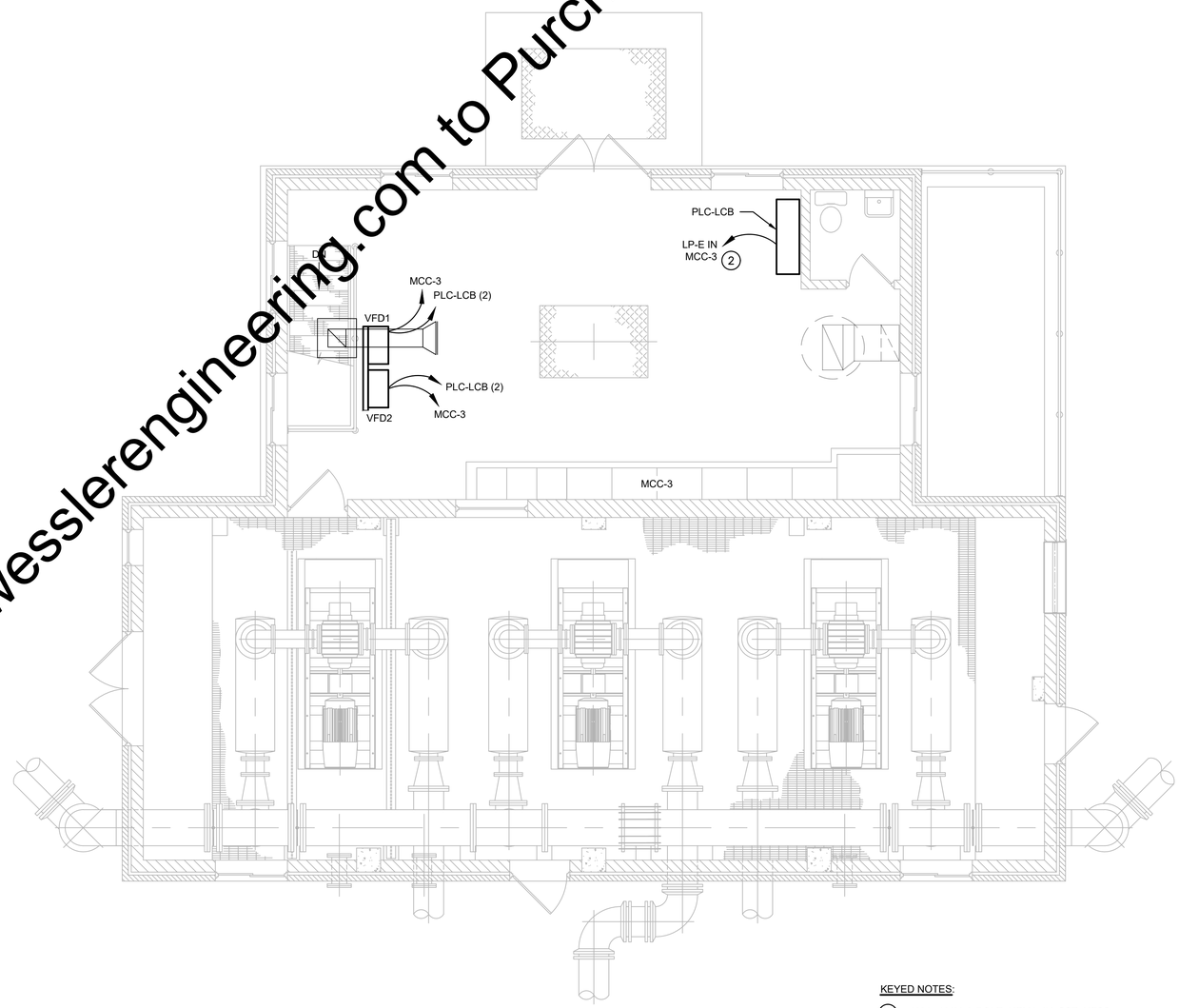

UPPER LEVEL ELECTRICAL PLAN

0 2 4 8 FT
1/4"=1'-0"

KEYED NOTES:

1. 100A, 480V, 3-POLE, NEMA 4X, SST, NFSS
2. CONNECT TO SPARE 20A CIRCUIT BREAKER IN LIGHTING PANEL LP-E.

"For Viewing Purposes Only - Visit wesslerengineering.com to Purchase"

SCALE VERIFICATION	DRAWN BY	EAS
BAR IS ONE INCH LONG ON ORIGINAL DRAWING	CHECKED BY	WCM
	APPROVED BY	WCM
	ISSUE DATE	MARCH 2020
	PROJECT NUMBER	193216-04-001

NO.	DATE	INITIALS	REVISION DESCRIPTIONS

WAYNE C. MOORE REGISTERED No. 10707476 STATE OF INDIANA PROFESSIONAL ENGINEER 03/04/2020

WESSLER ENGINEERING
More than a Project™

WASTEWATER SYSTEM EXPANSION

CITY OF FRANKFORT, INDIANA
CONTRACT A - WASTEWATER TREATMENT PLANT

LAGOON CONTROL BUILDING - ELECTRICAL PLAN

SHEET NO.
4E1

PAGE NO.
45

Drawing: J:\Frankfort\Projects\193216 Frankfort WWTP Exp\CAD 04-001\DWG\Sheets\Area 4 - EX-EQ-LG\4E EQ-LG-MOD-EL.dwg | Layout: 4E1 | Plotted: 03/05/20 @ 10:25:20 | LastSavedBy: AllenS

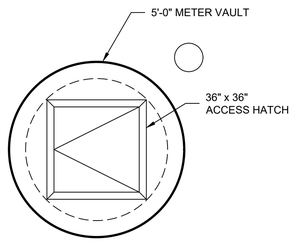

NOTES:
1. PROVIDE DROP PIPES AT ALL INFLUENT PIPES,

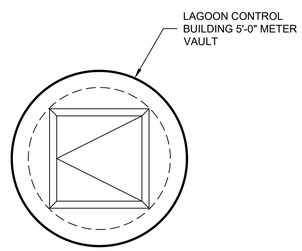

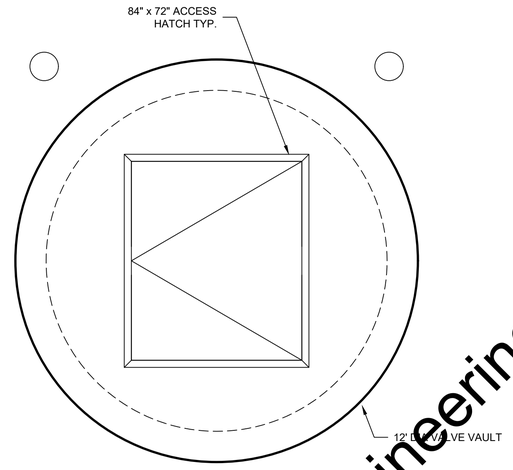

UPPER PLAN

0 2 4 6 FT
3/8"=1'-0"

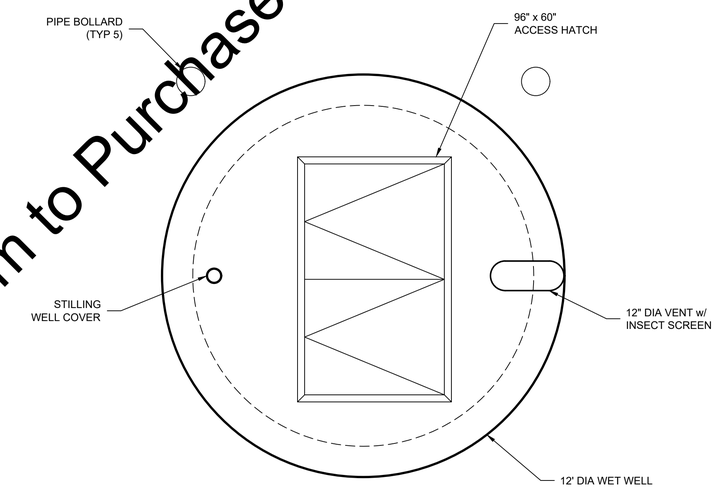

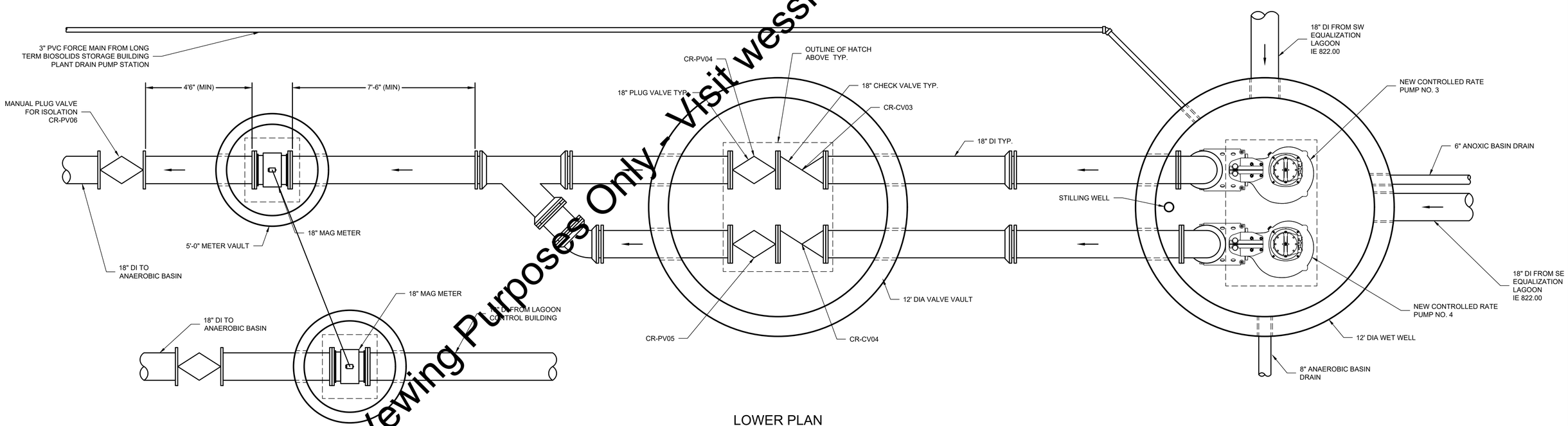

LOWER PLAN

0 2 4 6 FT
3/8"=1'-0"

"For Viewing Purposes Only - Visit wesslerengineering.com to Purchase"

SCALE VERIFICATION	DRAWN BY	MLN
BAR IS ONE INCH LONG ON ORIGINAL DRAWING	CHECKED BY	KLT
	APPROVED BY	RWH
	ISSUE DATE	MARCH 2020
	PROJECT NUMBER	193216-04-001

NO.	DATE	INITIALS	REVISION DESCRIPTIONS
	EXISTING		

ROBERT W. HOLDEN, II
REGISTERED
No. 10000096
STATE OF INDIANA
PROFESSIONAL ENGINEER
03/04/2020

WESSLER ENGINEERING
More than a Project™

WASTEWATER SYSTEM EXPANSION

CITY OF FRANKFORT, INDIANA
CONTRACT A - WASTEWATER TREATMENT PLANT

NEW CONTROLLED RATE PUMP STATION - PLANS

SHEET NO.
5C1

PAGE NO.
46

Drawing: J:\Frankfort\Projects\193216 Frankfort WWTP Exp\CAD 04-001\DWG\Sheets\Area 5 - PS\5C-CR-PS.dwg | Layout: 5C1 - PUMP STATION NO. 2 - PLANS | Plotted: 02/28/20 @ 10:46:41 | LastSavedBy: JonathanL

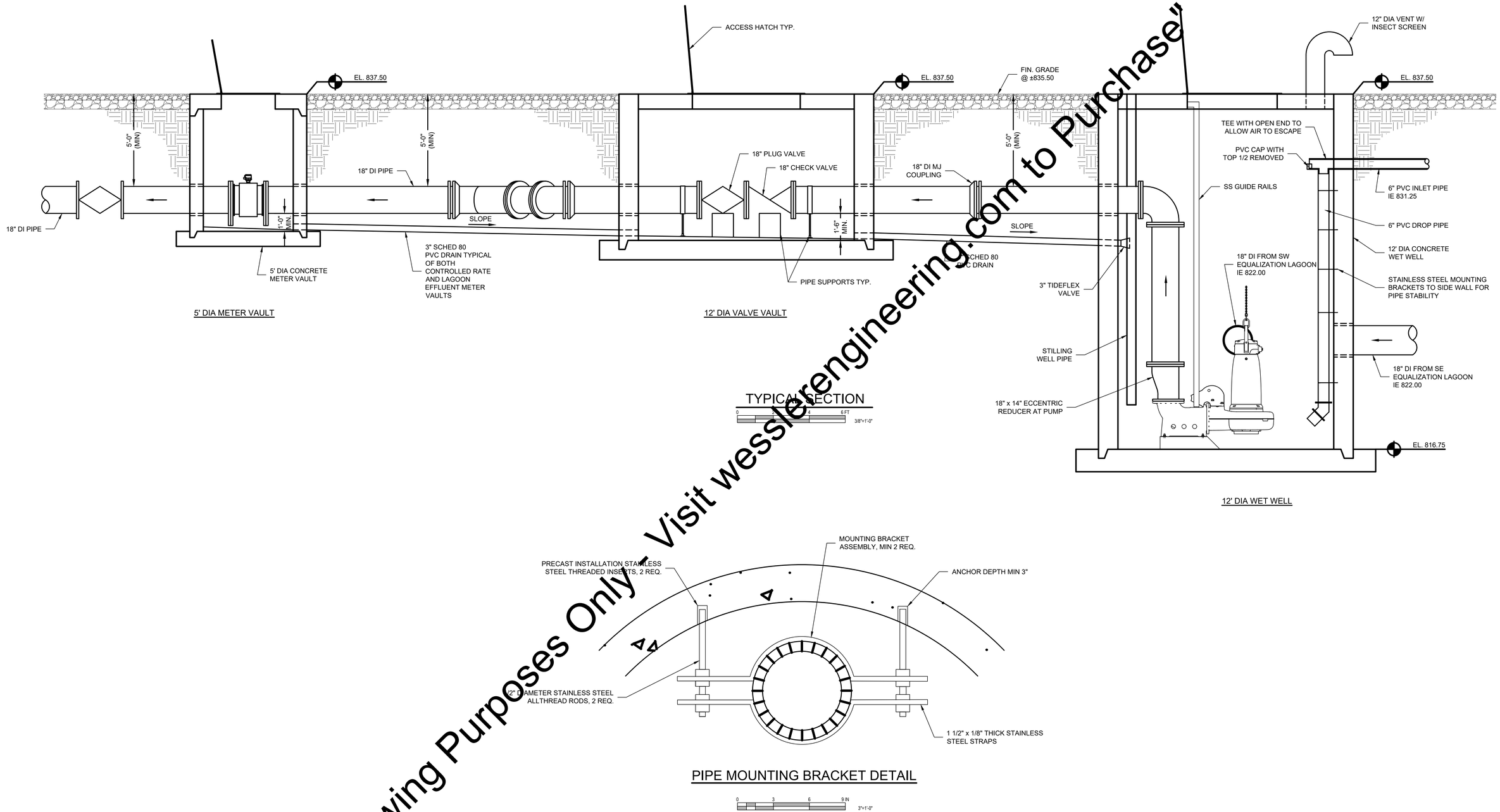

"For Vewing Purposes Only - Visit wesslerengineering.com to Purchase"

SCALE VERIFICATION	DRAWN BY	MLN
BAR IS ONE INCH LONG ON ORIGINAL DRAWING	CHECKED BY	ALT
	APPROVED BY	RWH
	ISSUE DATE	MARCH 2020
	PROJECT NUMBER	193216-04-001

NO.	DATE	INITIALS	REVISION DESCRIPTIONS
	EXISTING		

ROBERT W. HOLDEN, III REGISTERED No. 10000096 STATE OF INDIANA PROFESSIONAL ENGINEER 03/04/2020

WESSLER ENGINEERING
More than a Project™

WASTEWATER SYSTEM EXPANSION

CITY OF FRANKFORT, INDIANA
CONTRACT A - WASTEWATER TREATMENT PLANT

NEW CONTROLLED RATE PUMP STATION - SECTION AND DETAIL

SHEET NO. **5C2**

PAGE NO. 47

Drawing: J:\Frankfort\Projects\193216 Frankfort WWTP Exp\CAD 04-001\DWG\Sheets\Area 5 - PS\5C-CR-PS.dwg | Layout: 5C2 - PUMP STATION NO. 2 - SECTIONS | Plotted: 03/04/20 @ 02:33:44 | LastSavedBy: CurtisG

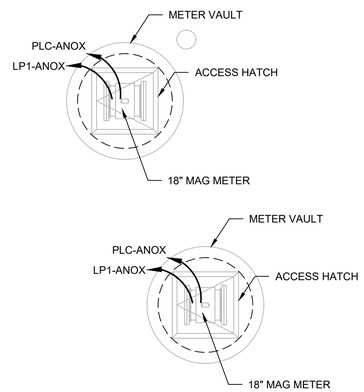

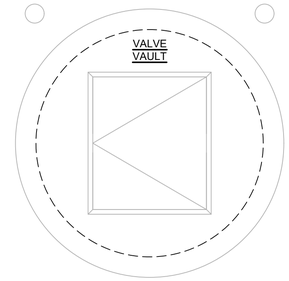

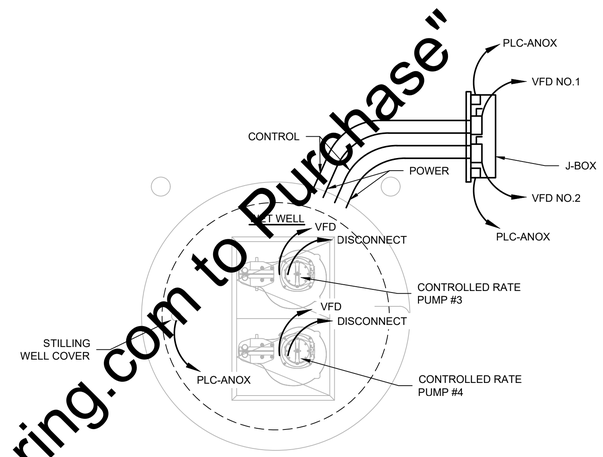

UPPER PLAN

0 2 4 8 FT

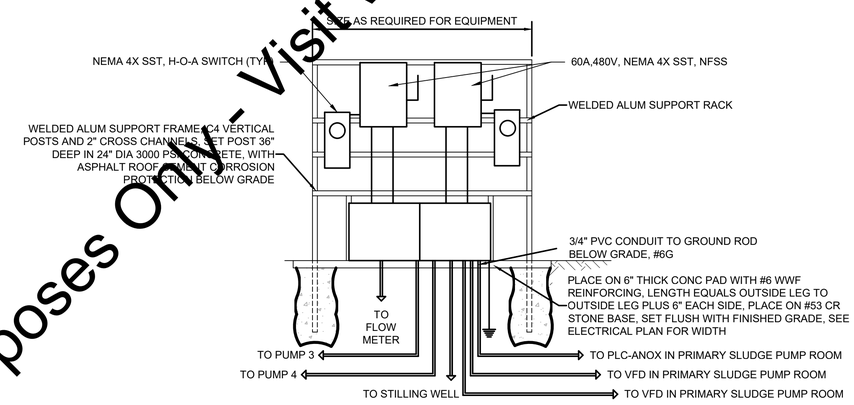

ELECTRICAL RACK DETAIL

SCALE: NONE

"For Vewing Purposes Only - Visit wesslerengineering.com to Purchase"

SCALE VERIFICATION	DRAWN BY	EAS
BAR IS ONE INCH LONG ON ORIGINAL DRAWING	CHECKED BY	WCM
	APPROVED BY	WCM
	ISSUE DATE	MARCH 2020
	PROJECT NUMBER	193216-04-001

NO.	DATE	INITIALS	REVISION DESCRIPTIONS
	EXISTING		

WAYNE C. MOORE REGISTERED No. 10707476 STATE OF INDIANA PROFESSIONAL ENGINEER 03/04/2020

WESSLER ENGINEERING
More than a Project™

WASTEWATER SYSTEM EXPANSION

CITY OF FRANKFORT, INDIANA
CONTRACT A - WASTEWATER TREATMENT PLANT

NEW CONTROLLED RATE PUMP STATION - ELECTRICAL PLANS

SHEET NO.
5E1

PAGE NO.
48

Drawing: J:\Frankfort\Projects\193216 Frankfort WWTP Exp\CAD 04-001\DWG\Sheets\Area 5 - PS\SC-EL-CR-PS.dwg | Layout: 5E1 | Plotted: 03/04/20 @ 03:06:49 | LastSavedBy: AllenS

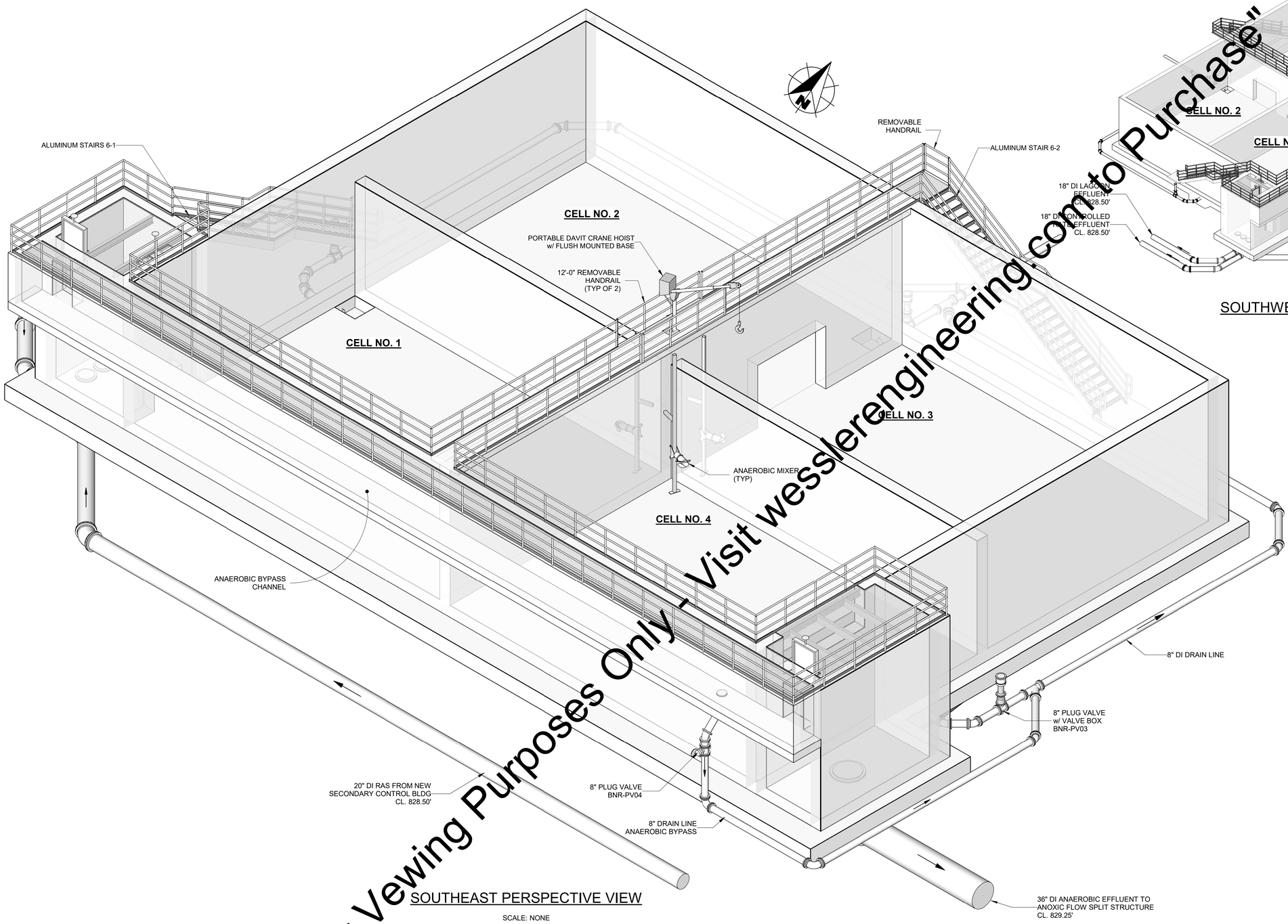

SOUTHEAST PERSPECTIVE VIEW

SCALE: NONE

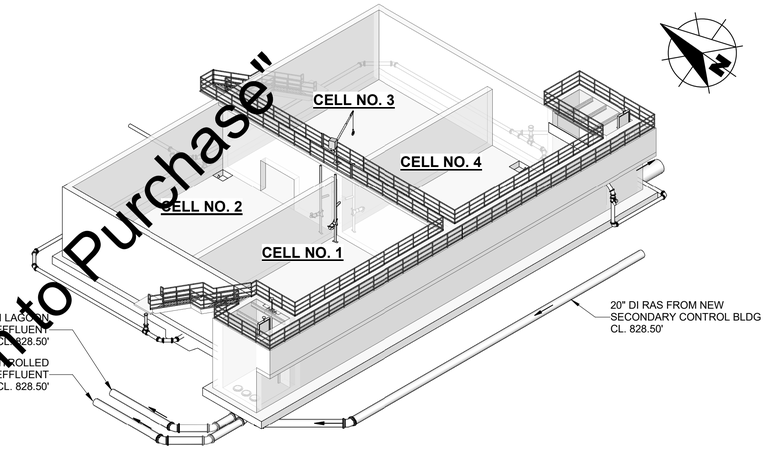

SOUTHWEST PERSPECTIVE VIEW

SCALE: NONE

For Viewing Purposes Only - Visit wesslerengineering.com to Purchase"

SCALE VERIFICATION	DRAWN BY	CL
BAR IS ONE INCH LONG ON ORIGINAL DRAWING	CHECKED BY	BRP
	APPROVED BY	RWH
	ISSUE DATE	MARCH 2020
	PROJECT NUMBER	193216-04-001

NO.	DATE	INITIALS	REVISION DESCRIPTION

ROBERT W. HOLDEN, II REGISTERED No. 10000096 STATE OF INDIANA PROFESSIONAL ENGINEER 3/4/2020

WESSLER ENGINEERING

More than a Project™

WASTEWATER SYSTEM EXPANSION

CITY OF FRANKFORT, INDIANA

CONTRACT A - WASTEWATER TREATMENT PLANT

NEW ANAEROBIC BASIN PERSPECTIVE VIEWS

SHEET NO. **6G1**

PAGE NO. 49

Plotted: 3/4/2020 2:47:34 PM C:\users\CurtisG\Documents\193216-New Anaerobic Basin_CENTRAL - R19_CurtisGrannan.rvt

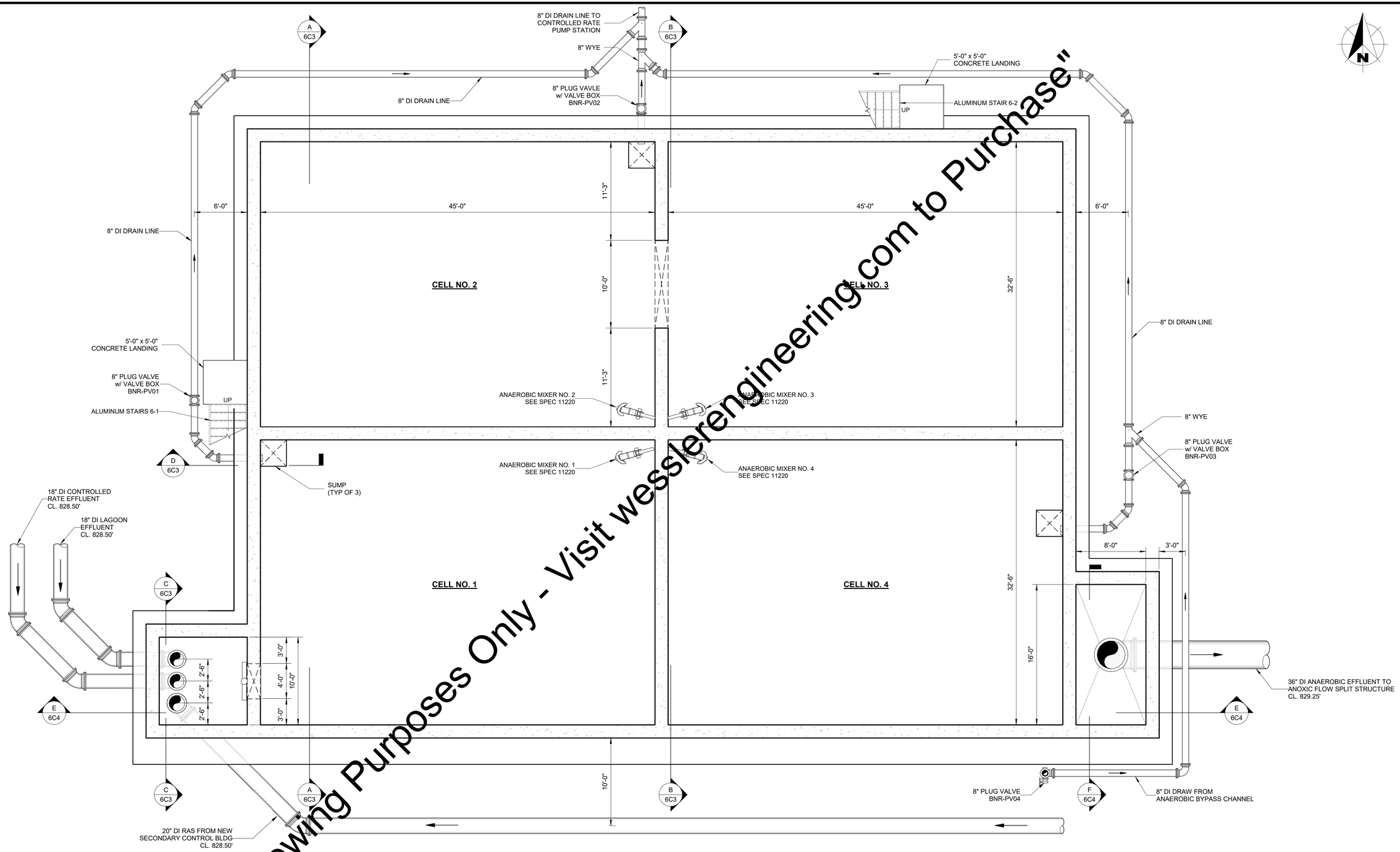

LOWER LEVEL PLAN

0 4 8 12 FT
3/16"=1'-0"

"For Viewing Purposes Only - Visit wesslerengineering.com to Purchase"

SCALE VERIFICATION	DRAWN BY	[redacted]
BAR IS ONE INCH LONG ON ORIGINAL DRAWING	CHECKED BY	BRP
[redacted]	APPROVED BY	RWH
	ISSUE DATE	MARCH 2020
	PROJECT NUMBER	193216-04-001

NO.	DATE	INITIALS	REVISION DESCRIPTION

ROBERT W. HOLDEN, II REGISTERED No. 10000096 STATE OF INDIANA PROFESSIONAL ENGINEER 3/4/2020

WESSLER ENGINEERING
More than a Project™

WASTEWATER SYSTEM EXPANSION
CITY OF FRANKFORT, INDIANA
CONTRACT A - WASTEWATER TREATMENT PLANT

NEW ANAEROBIC BASIN
LOWER LEVEL PLAN

SHEET NO. **6C1**
PAGE NO. 50

Plotted: 3/4/2020 2:46:49 PM C:\users\CurtisG\Documents\193216-New Anaerobic Basin_CENTRAL - R19_CurtisGrannan.rvt

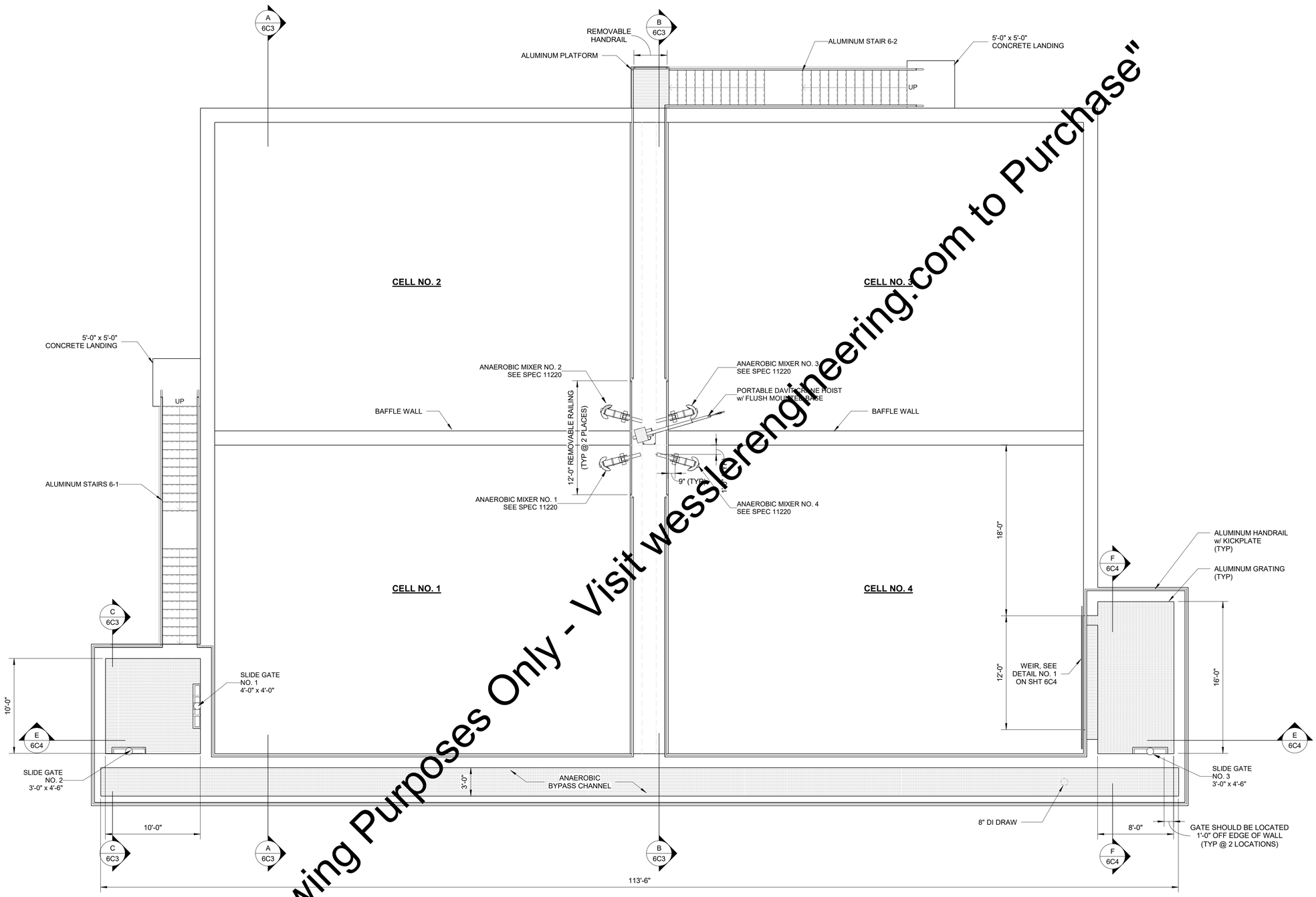

UPPER LEVEL PLAN

0 4 8 12 FT
3/16"=1'-0"

"For Vewing Purposes Only - Visit wesslerengineering.com to Purchase"

SCALE VERIFICATION	DRAWN BY	DL
BAR IS ONE INCH LONG ON ORIGINAL DRAWING	CHECKED BY	BRP
	APPROVED BY	RWH
	ISSUE DATE	MARCH 2020
	PROJECT NUMBER	193216-04-001

NO.	DATE	INITIALS	REVISION DESCRIPTION

ROBERT W. HOLDEN, II REGISTERED No. 10000096 STATE OF INDIANA PROFESSIONAL ENGINEER 3/4/2020

WESSLER ENGINEERING
More than a Project™

WASTEWATER SYSTEM EXPANSION
CITY OF FRANKFORT, INDIANA
CONTRACT A - WASTEWATER TREATMENT PLANT

NEW ANAEROBIC BASIN
UPPER LEVEL PLAN

SHEET NO. **6C2**

PAGE NO. 51

Plotted: 3/4/2020 2:46:52 PM C:\users\CurtisG\Documents\193216-New Anaerobic Basin_CENTRAL - R19_CurtisGraman.rvt

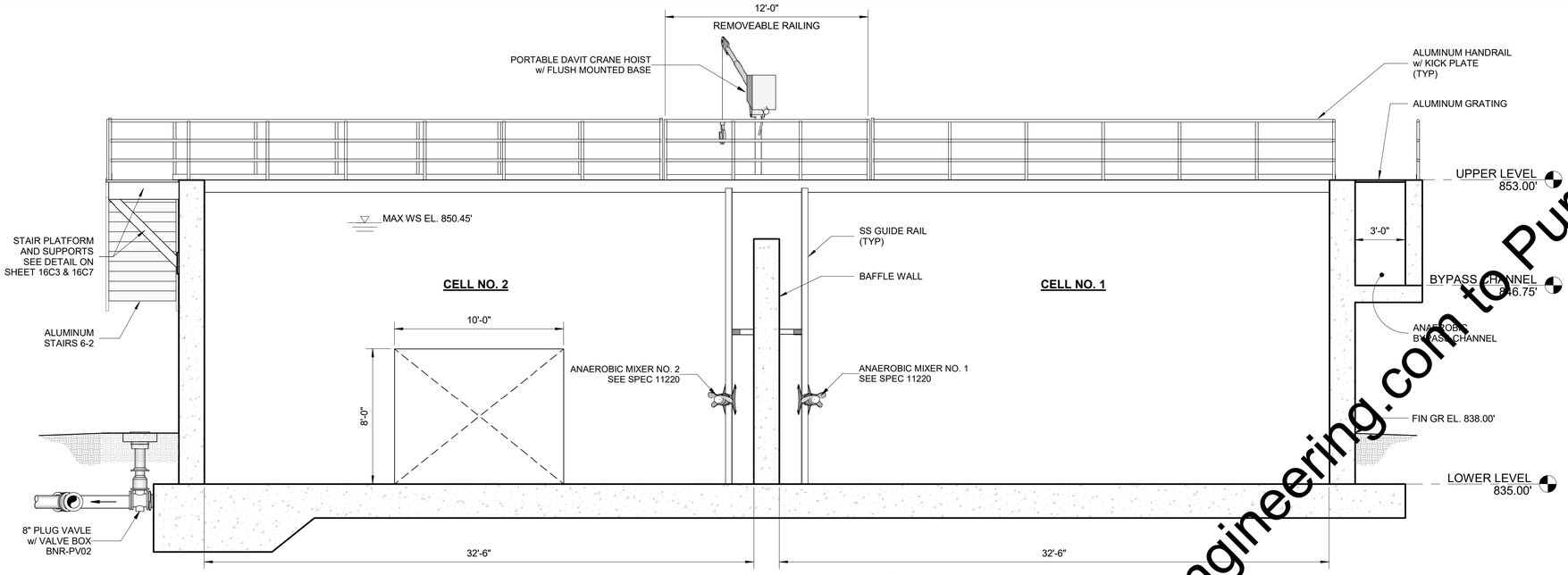

SECTION A 6C1

0 2 4 8 FT 1/4"=1'-0"

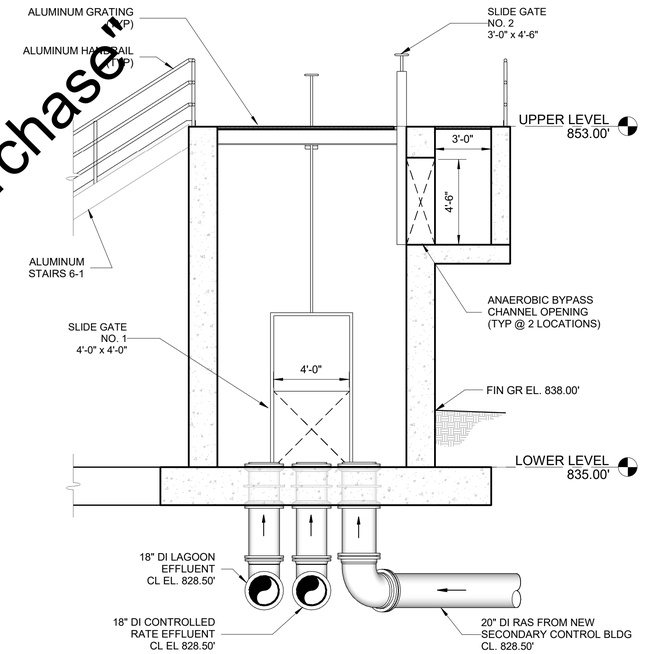

SECTION C 6C1

0 2 4 8 FT 1/4"=1'-0"

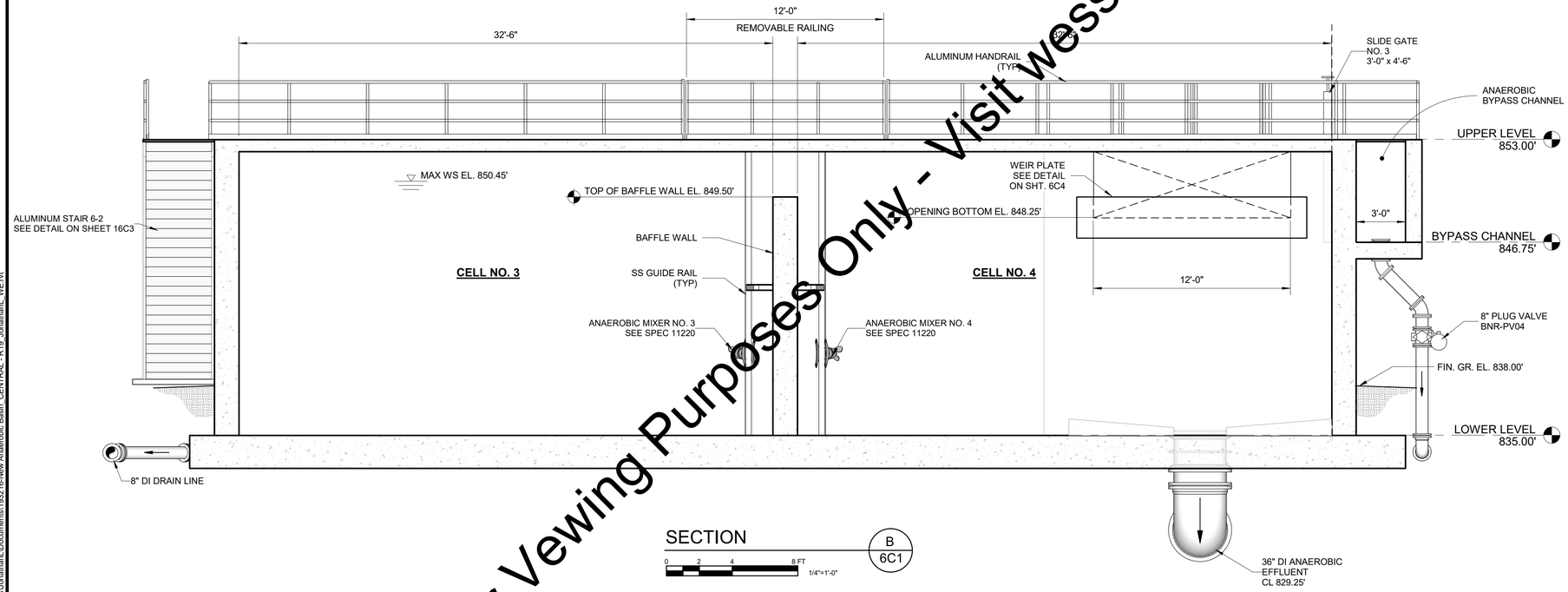

SECTION B 6C1

0 2 4 8 FT 1/4"=1'-0"

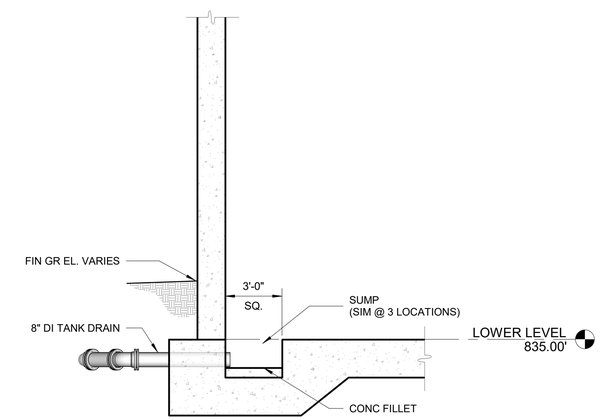

SECTION D 6C1

0 2 4 8 FT 1/4"=1'-0"

SCALE VERIFICATION	DRAWN BY	JD
BAR IS ONE INCH LONG ON ORIGINAL DRAWING	CHECKED BY	BRP
	APPROVED BY	RWH
	ISSUE DATE	MARCH 2020
	PROJECT NUMBER	193216-04-001

NO.	DATE	INITIALS	REVISION DESCRIPTION

ROBERT W. HOLDEN, II REGISTERED No. 10000096 STATE OF INDIANA PROFESSIONAL ENGINEER 3/4/2020

WESSLER ENGINEERING

More than a Project™

WASTEWATER SYSTEM EXPANSION

CITY OF FRANKFORT, INDIANA

CONTRACT A - WASTEWATER TREATMENT PLANT

NEW ANAEROBIC BASIN SECTIONS

SHEET NO. **6C3**

PAGE NO. 52

For Viewing Purposes Only - Visit wesslerengineering.com to Purchase

Plotted: 2/26/2020 9:24:00 AM C:\users\Jonathan\LDocuments\193216-New Anaerobic Basin_CENTRAL - R19_Jonathan_WE.rvt

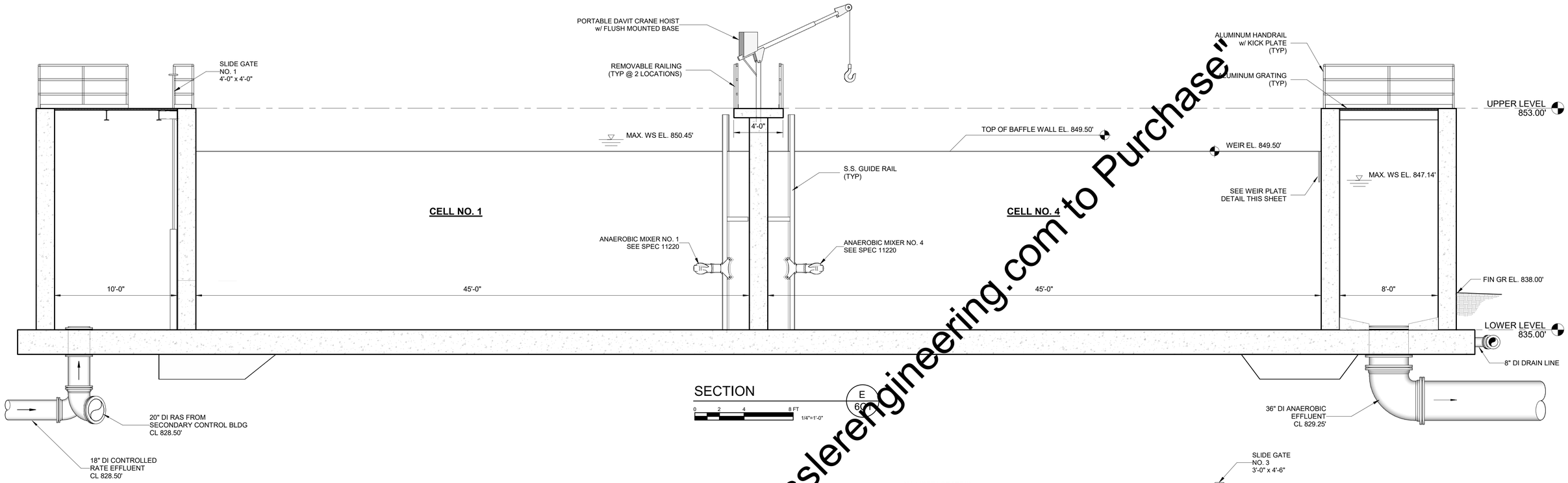

"For Vewing Purposes Only - Visit wesslerengineering.com to Purchase"

SCALE VERIFICATION	DRAWN BY	JL
BAR IS ONE INCH LONG ON ORIGINAL DRAWING	CHECKED BY	BRP
	APPROVED BY	RWH
	ISSUE DATE	MARCH 2020
	PROJECT NUMBER	193216-04-001

NO.	DATE	INITIALS	REVISION DESCRIPTION

ROBERT W. HOLDEN, II
REGISTERED
No. 10000096
STATE OF INDIANA
PROFESSIONAL ENGINEER
3/4/2020

WESSLER ENGINEERING
More than a Project™

WASTEWATER SYSTEM EXPANSION
CITY OF FRANKFORT, INDIANA
CONTRACT A - WASTEWATER TREATMENT PLANT

NEW ANAEROBIC BASIN - SECTIONS

SHEET NO.
6C4

PAGE NO.
53

Plotted: 2/26/2020 9:24:03 AM C:\Users\Jonathan\LDocuments\193216-New Anaerobic Basin_CENTRAL - R19_JonathanL_WE.rvt

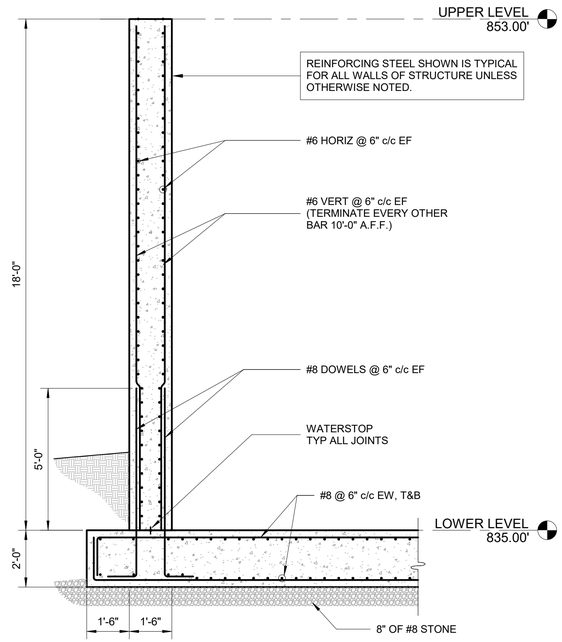

SECTION A 6S1

0 2 4 6 FT 3/8"=1'-0"

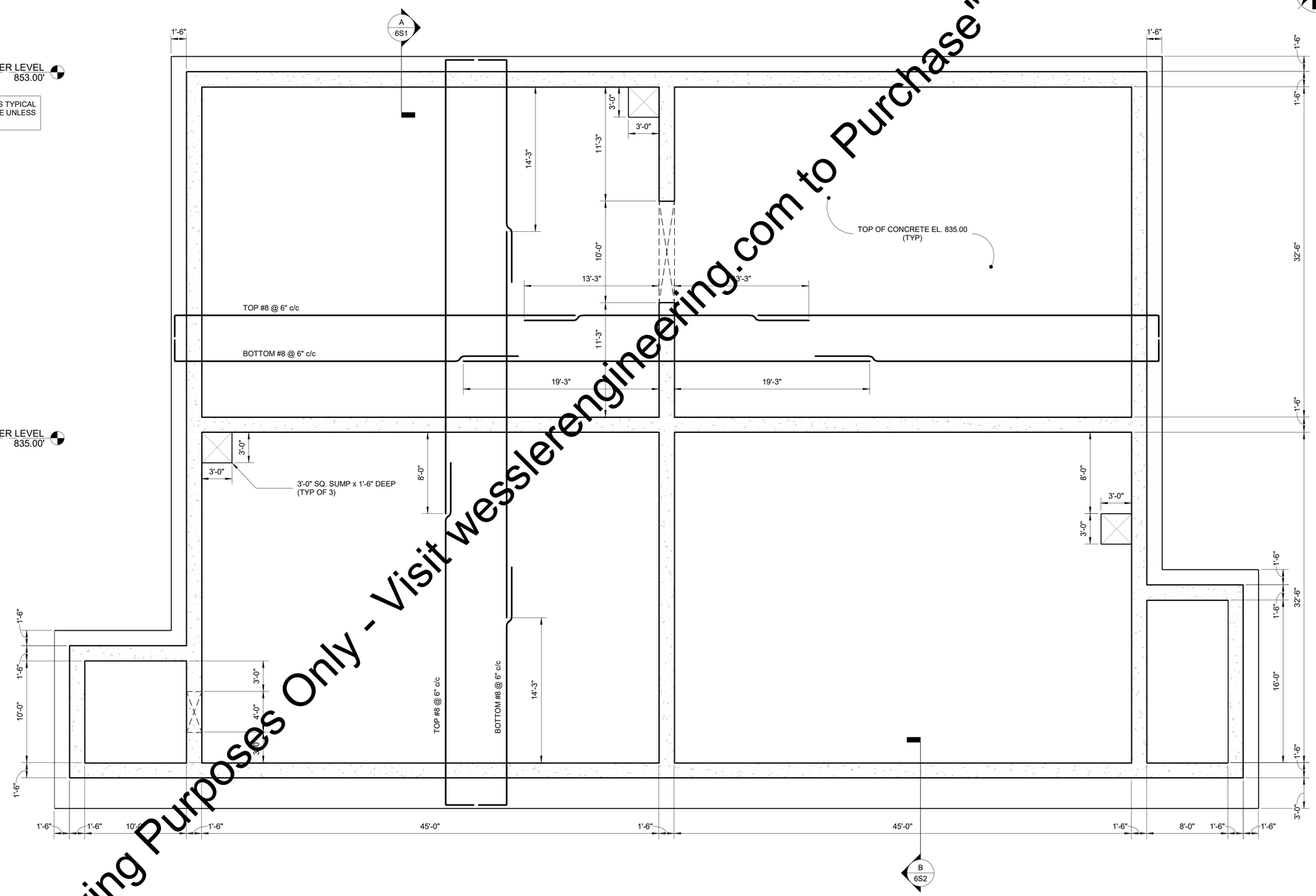

FOUNDATION PLAN

0 4 8 12 FT 3/16"=1'-0"

FOR STRUCTURAL GENERAL NOTES SEE 1S1.
FOR STANDARD DETAILS SEE AREA 16S SHEETS.

"For Vewing Purposes Only - Visit wesslerengineering.com to Purchase"

SCALE VERIFICATION	DRAWN BY	JL
BAR IS ONE INCH LONG ON ORIGINAL DRAWING	CHECKED BY	JRB
	APPROVED BY	JRB
	ISSUE DATE	MARCH 2020
	PROJECT NUMBER	193216-04-001

NO.	DATE	INITIALS	REVISION DESCRIPTION

JEFFREY ROSS BALLARD REGISTERED No. 60860191 STATE OF INDIANA PROFESSIONAL ENGINEER 3/4/2020

WESSLER ENGINEERING
More than a Project™

WASTEWATER SYSTEM EXPANSION
CITY OF FRANKFORT, INDIANA
CONTRACT A - WASTEWATER TREATMENT PLANT

NEW ANAEROBIC BASIN
FOUNDATION PLAN AND SECTION

SHEET NO. **6S1**

PAGE NO. 54

Plotted: 2/26/2020 9:27:03 AM C:\users\JonathanL\Documents\193216-New Anaerobic Basin_CENTRAL - R19_JonathanL_WE.rvt

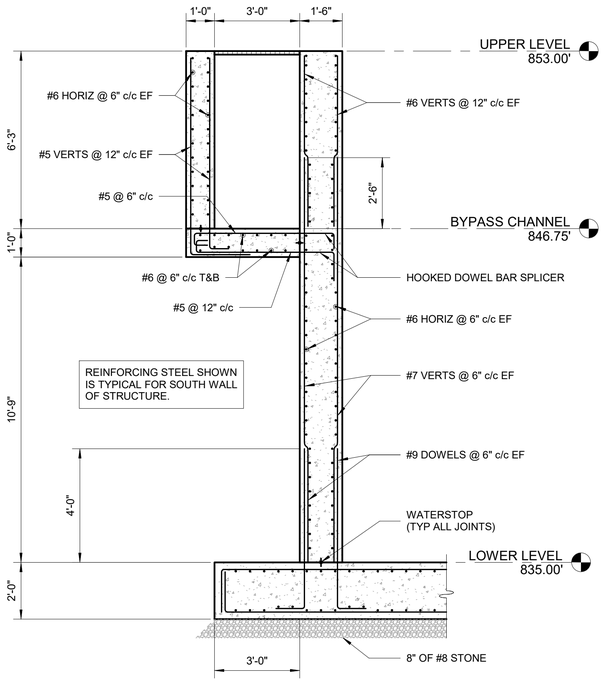

SECTION B 6S1

0 2 4 6 FT 3/8"=1'-0"

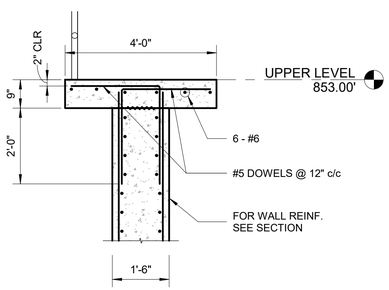

SECTION C 6S2

0 1 2 4 FT 1/2"=1'-0"

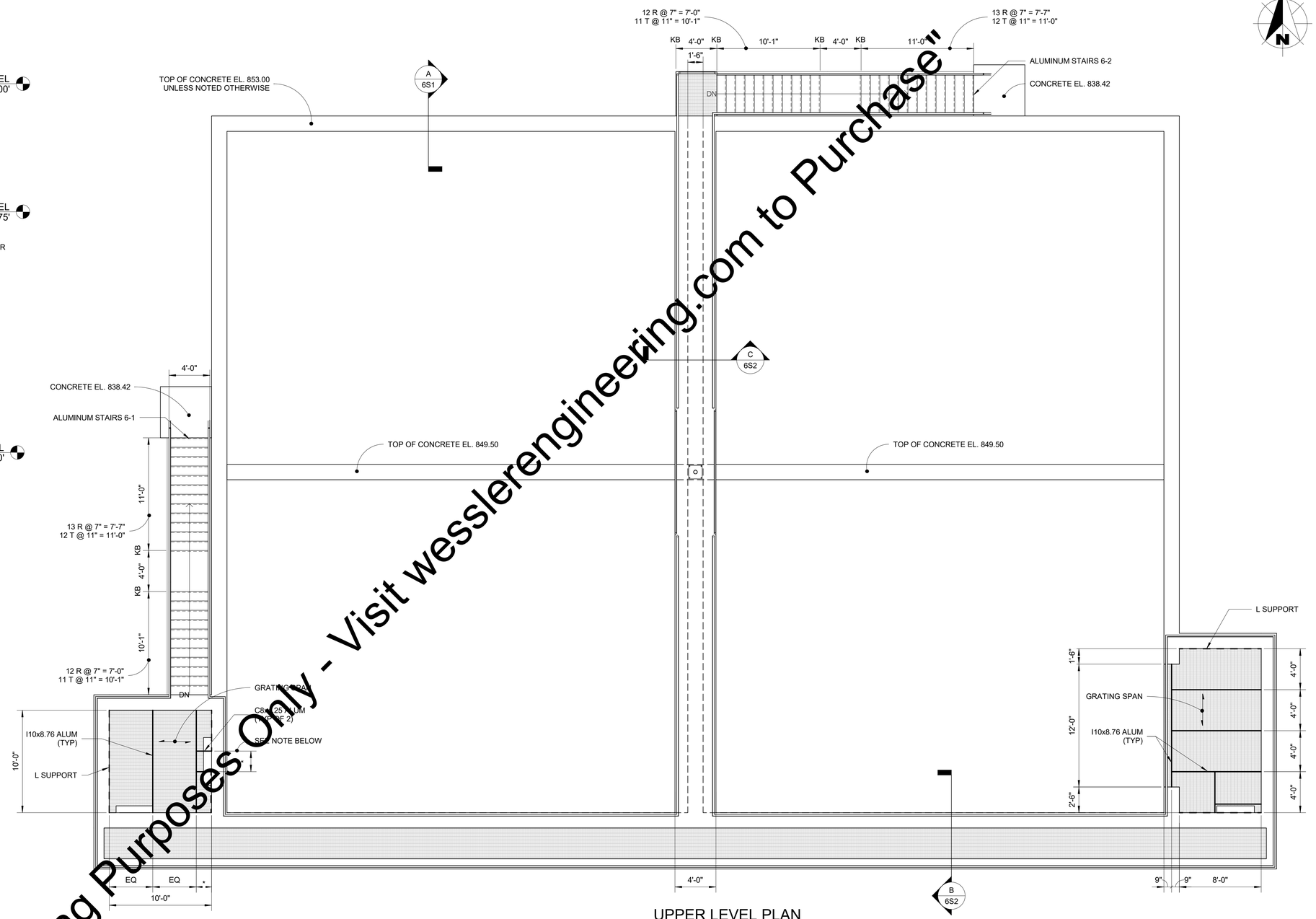

UPPER LEVEL PLAN

0 4 8 12 FT 3/16"=1'-0"

NOTE:

* DIMENSIONS DEPENDENT ON GATE OPERATOR WALL BRACKET.

FOR STRUCTURAL GENERAL NOTES SEE 1S1.
FOR STANDARD DETAILS SEE AREA 16S SHEETS.

"For Vewing Purposes Only - Visit wesslerengineering.com to Purchase"

SCALE VERIFICATION	DRAWN BY	JB
BAR IS ONE INCH LONG ON ORIGINAL DRAWING	CHECKED BY	JRB
	APPROVED BY	JRB
	ISSUE DATE	MARCH 2020
	PROJECT NUMBER	193216-04-001

NO.	DATE	INITIALS	REVISION DESCRIPTION

JEFFREY ROSS BALLARD REGISTERED No. 60860191 STATE OF INDIANA PROFESSIONAL ENGINEER 3/4/2020

WESSLER ENGINEERING
More than a Project™

WASTEWATER SYSTEM EXPANSION
CITY OF FRANKFORT, INDIANA
CONTRACT A - WASTEWATER TREATMENT PLANT

NEW ANAEROBIC BASIN
STRUCTURAL UPPER LEVEL PLAN AND SECTIONS

SHEET NO. **6S2**
PAGE NO. 55

Plotted: 2/26/2020 9:24:09 AM C:\users\Jonathan\LDocuments\193216-New Anaerobic Basin_CENTRAL - R19_Jonathan_WE.rvt

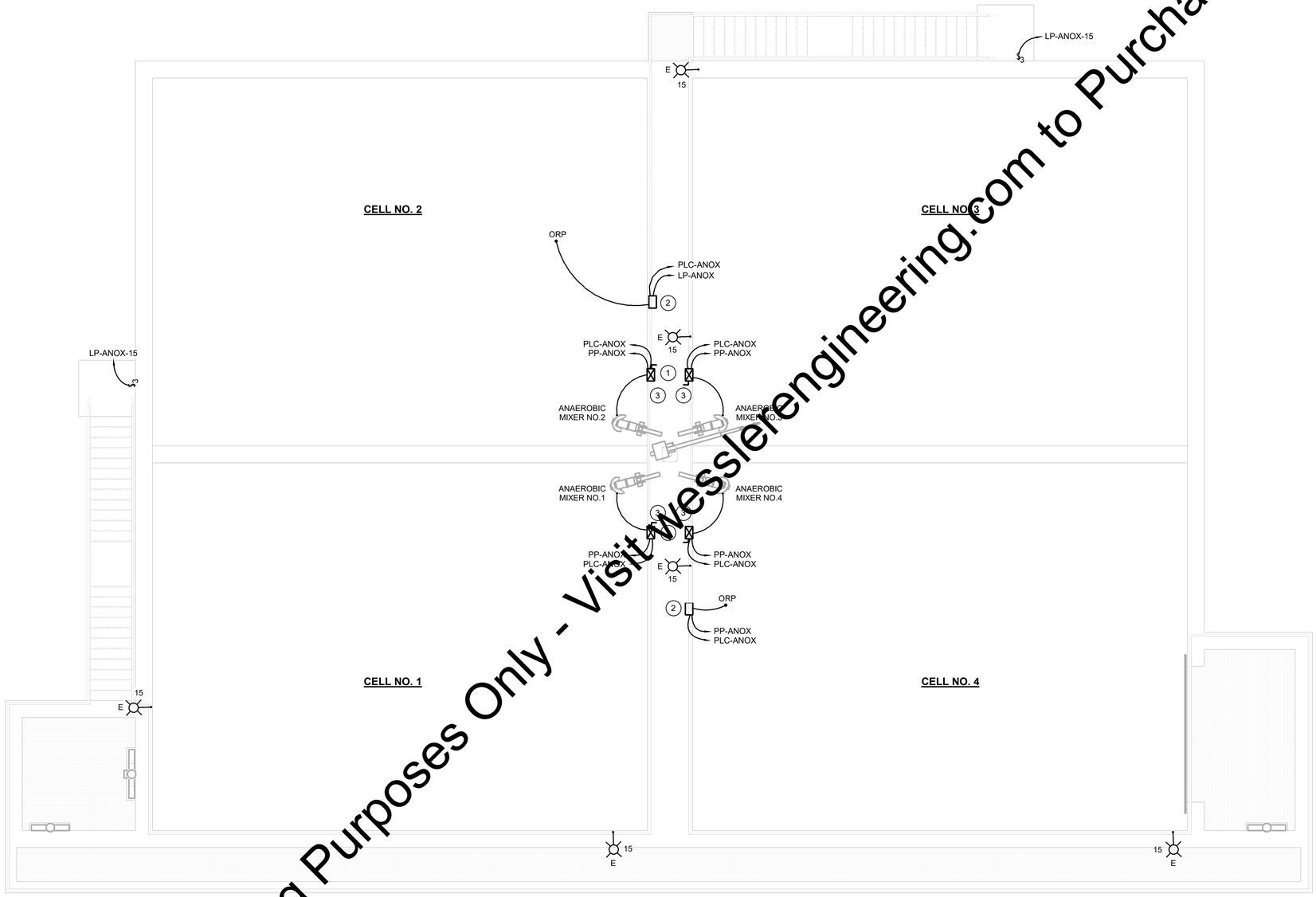

OVERALL ELECTRICAL PLAN

0 4 8 12 FT
3/16"=1'-0"

(#) POWER NOTES

1 PROVIDE UNISTRUT AS REQUIRED TO INSTALL STARTER.

2 PROVIDE UNISTRUT AS REQUIRED TO INSTALL CONTROL PANEL.

3 COMBINATION MOTOR STARTER, SIZE 1, NEMA 4X, SST.

"For Vewing Purposes Only - Visit wesslerengineering.com to Purchase"

SCALE VERIFICATION	DRAWN BY	EAS
BAR IS ONE INCH LONG ON ORIGINAL DRAWING	CHECKED BY	WCM
	APPROVED BY	WCM
	ISSUE DATE	MARCH 2020
	PROJECT NUMBER	193216-04-001

NO.	DATE	INITIALS	REVISION DESCRIPTION

WAYNE C. MOORE REGISTERED No. 10707476 STATE OF INDIANA PROFESSIONAL ENGINEER 3/4/2020

WESSLER ENGINEERING
More than a Project™

WASTEWATER SYSTEM EXPANSION
FRANKFORT UTILITIES
FRANKFORT, INDIANA

NEW ANAEROBIC BASIN - POWER PLAN

SHEET NO. **6E1**

PAGE NO. 56

Plotted: 3/4/2020 8:46:10 AM J:\Frankfort\Projects\193216 Frankfort WWTP Exp\CAD 04-001\Revit\Models\193216-EL-NEW ANEROBIC BASIN - R19.rvt

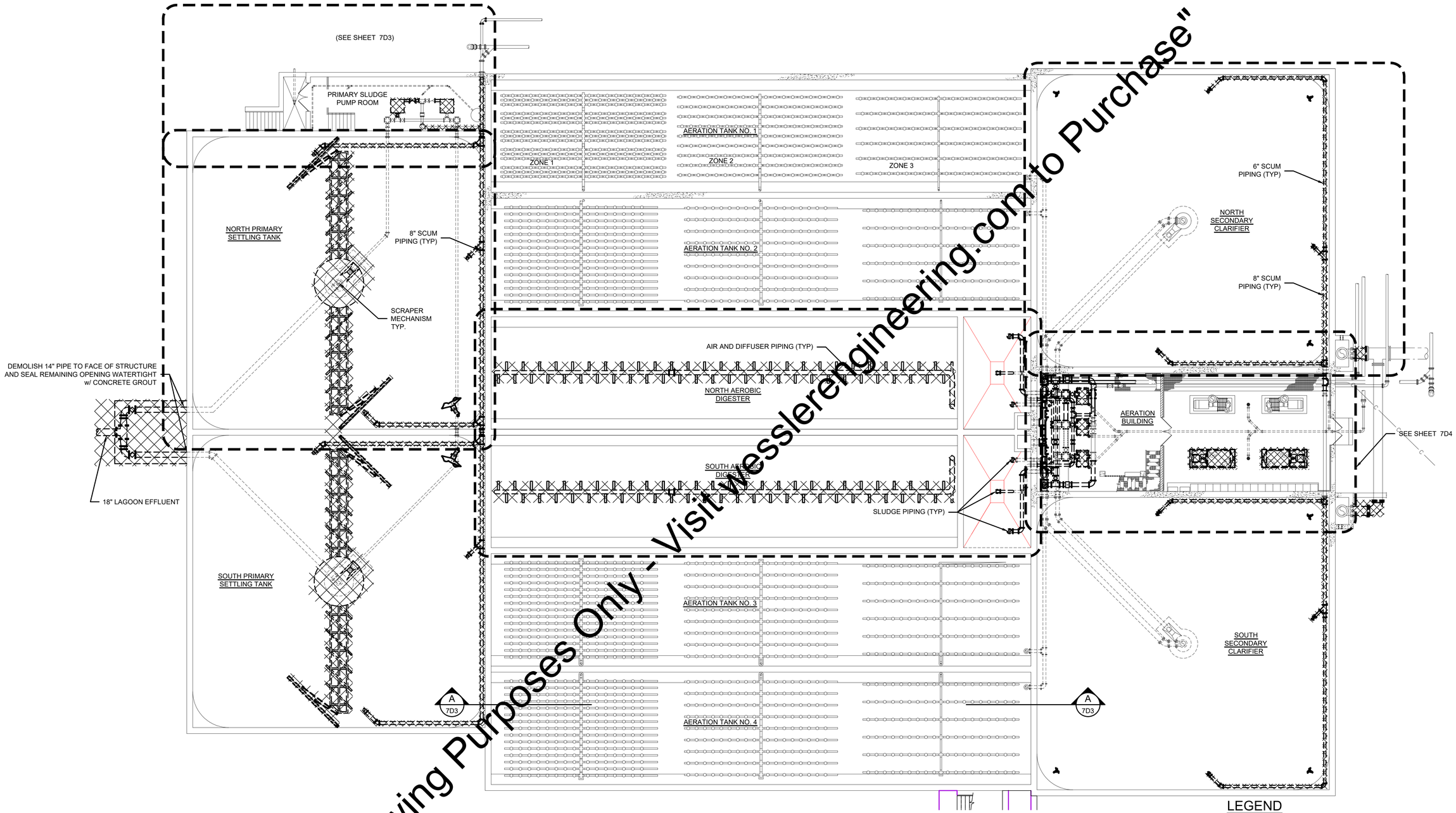

OVERALL LOWER LEVEL DEMOLITION PLAN

0 5 10 20 FT
3/32"=1'-0"

LEGEND

- EXISTING PIPES TO RELOCATE
- EXISTING FEATURES TO REMAIN
- EXISTING FEATURES TO BE DEMOLISHED

"For Viewing Purposes Only - Visit wesslerengineering.com to Purchase"

SCALE VERIFICATION	DRAWN BY	TWL
BAR IS ONE INCH LONG ON ORIGINAL DRAWING	CHECKED BY	PRP
	APPROVED BY	RWH
	ISSUE DATE	MARCH 2020
	PROJECT NUMBER	193216-04-001

NO.	DATE	INITIALS	REVISION DESCRIPTIONS

ROBERT W. HOLDEN, II REGISTERED No. 10000096 STATE OF INDIANA PROFESSIONAL ENGINEER 03/04/2020

WESSLER ENGINEERING
More than a Project™

WASTEWATER SYSTEM EXPANSION
CITY OF FRANKFORT, INDIANA
CONTRACT A - WASTEWATER TREATMENT PLANT

EXISTING SETTLING/AERATION COMPLEX
OVERALL LOWER LEVEL DEMOLITION PLAN

SHEET NO. **7D1**

PAGE NO. 57

Drawing: J:\Frankfort\Projects\193216 Frankfort WWTP Exp\CAD 04-001\DWG\Sheets\Area 7 - EX-BNR\7D BNR-DEMO.dwg | Layout: 7D1 | Plotted: 03/04/20 @ 02:51:58 | LastSavedBy: Curtis G

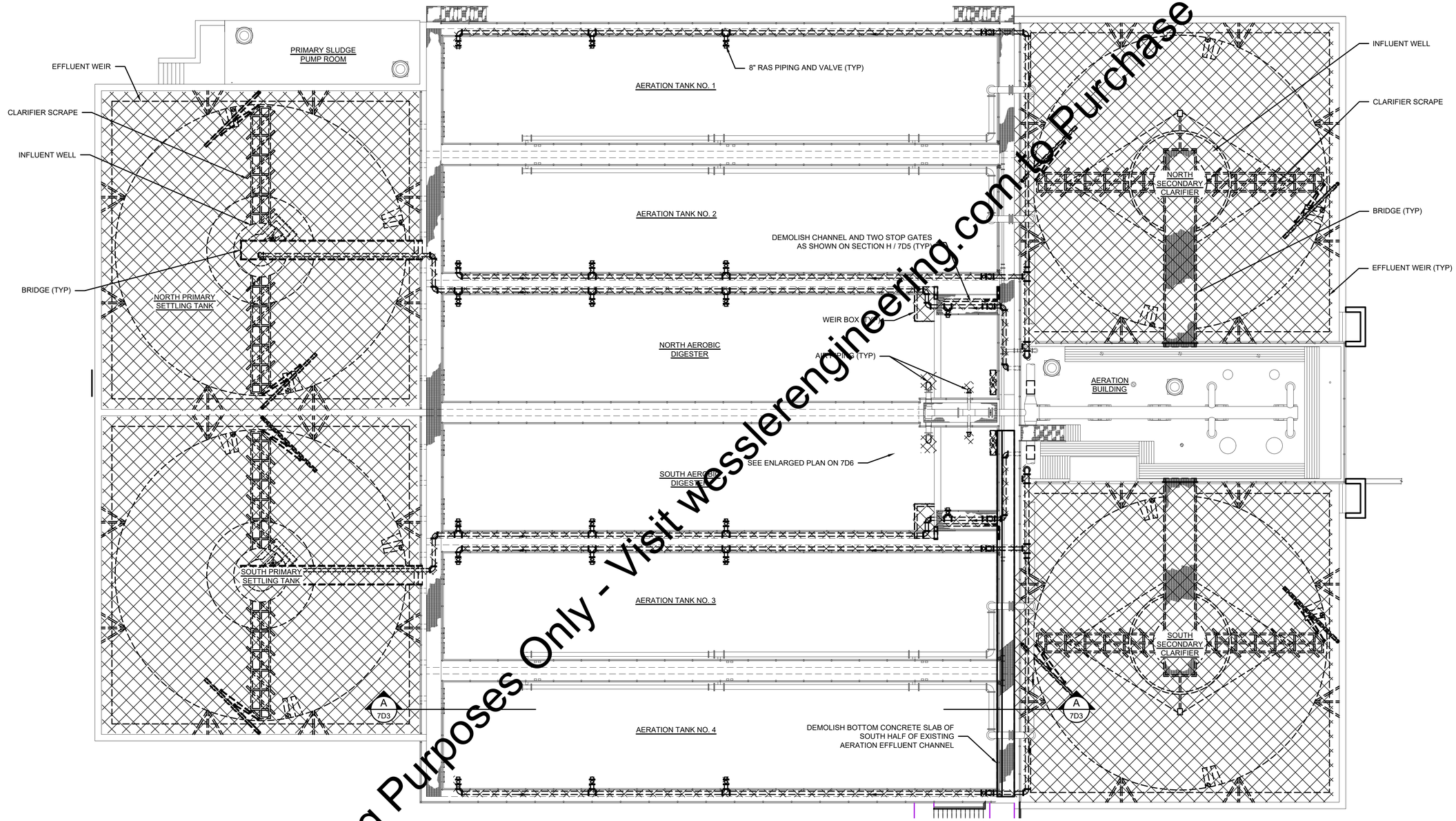

"For Vewing Purposes Only - Visit wesslerengineering.com to Purchase"

OVERALL UPPER LEVEL DEMOLITION PLAN

0 5 10 20 FT
3/32"=1'-0"

LEGEND

- EXISTING PIPES TO RELOCATE
- EXISTING FEATURES TO REMAIN
- EXISTING FEATURES TO BE DEMOLISHED

SCALE VERIFICATION	DRAWN BY	TWL
BAR IS ONE INCH LONG ON ORIGINAL DRAWING	CHECKED BY	PRP
	APPROVED BY	RWH
	ISSUE DATE	MARCH 2020
	PROJECT NUMBER	193216-04-001

NO.	DATE	INITIALS	REVISION DESCRIPTIONS

ROBERT W. HOLDEN, II REGISTERED No. 10000096 STATE OF INDIANA PROFESSIONAL ENGINEER 03/04/2020

WESSLER ENGINEERING
More than a Project™

WASTEWATER SYSTEM EXPANSION
CITY OF FRANKFORT, INDIANA
CONTRACT A - WASTEWATER TREATMENT PLANT

EXISTING SETTLING/AERATION COMPLEX
OVERALL UPPER LEVEL DEMOLITION PLAN

SHEET NO.
7D2

PAGE NO.
58

Drawing: J:\Frankfort\Projects\193216 Frankfort WWTP Exp\CAD 04-001\DWG\Sheets\Area 7 - EX-BNR\7D BNR-DEMO.dwg | Layout: 7D2 | Plotted: 03/04/20 @ 02:53:06 | LastSavedBy: CurtisG

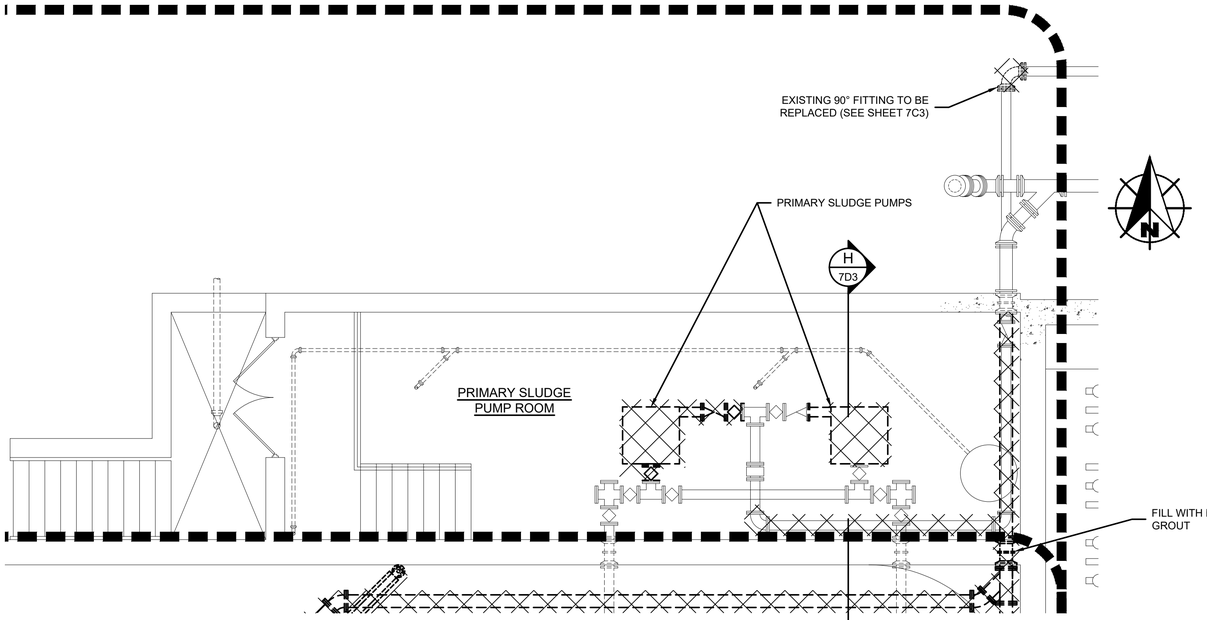

EXISTING PRIMARY SLUDGE PUMP ROOM - DEMOLITION PLAN

0 2 4 8 FT 1/4"=1'-0"

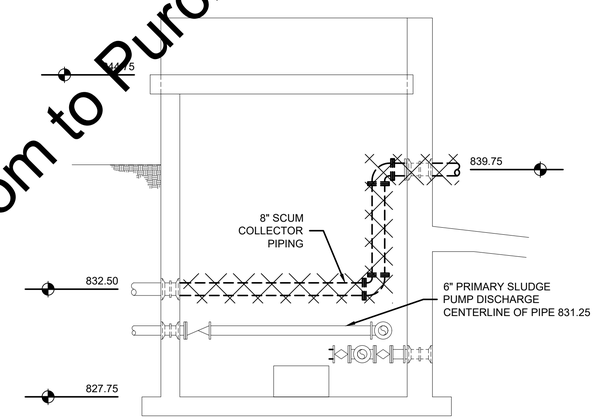

SECTION H 7D3

0 2 4 8 FT 1/4"=1'-0"

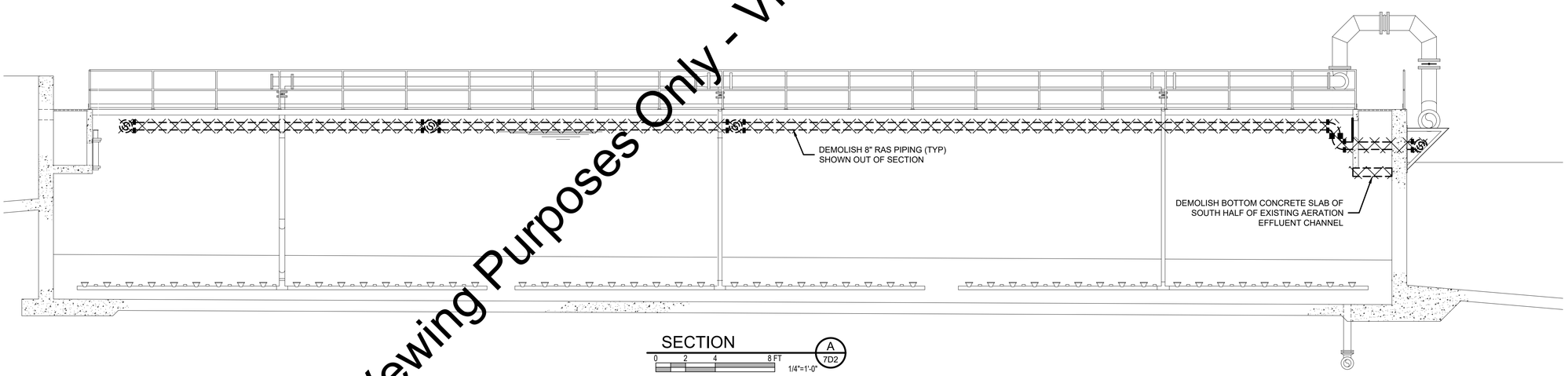

SECTION A 7D2

0 2 4 8 FT 1/4"=1'-0"

LEGEND

- EXISTING PIPES TO RELOCATE
- EXISTING FEATURES TO REMAIN
- EXISTING FEATURES TO BE DEMOLISHED

"For Vewing Purposes Only - Visit wesslerengineering.com to Purchase"

SCALE VERIFICATION	DRAWN BY	TWC
BAR IS ONE INCH LONG ON ORIGINAL DRAWING	CHECKED BY	BRP
	APPROVED BY	RWH
	ISSUE DATE	MARCH 2020
	PROJECT NUMBER	193216-04-001

NO.	DATE	INITIALS	REVISION DESCRIPTIONS

ROBERT W. HOLDEN, II REGISTERED No. 10000096 STATE OF INDIANA PROFESSIONAL ENGINEER 03/04/2020

WESSLER ENGINEERING
More than a Project™

WASTEWATER SYSTEM EXPANSION

CITY OF FRANKFORT, INDIANA
CONTRACT A - WASTEWATER TREATMENT PLANT

MISCELLANEOUS - DEMOLITION PLANS AND SECTIONS

SHEET NO. **7D3**

PAGE NO. 59

Drawing: J:\Frankfort\Projects\193216 Frankfort WWTP Exp\CAD 04-001\DWG\Sheets\Area 7 - EX-BNR\7D BNR-DEMO.dwg | Layout: 7D3 | Plotted: 03/04/20 @ 02:55:39 | LastSavedBy: CurtisG

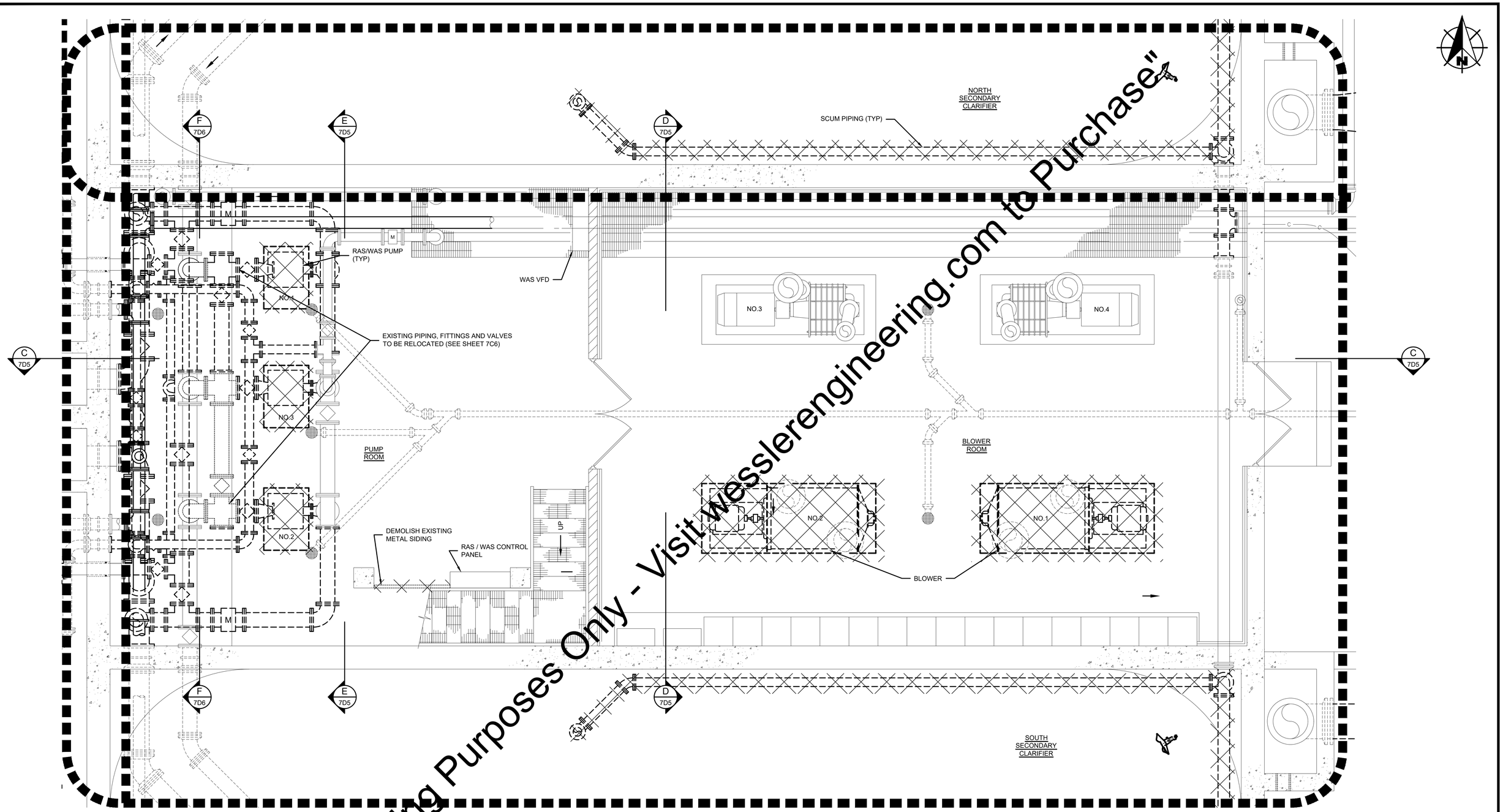

"For Vewing Purposes Only - Visit wesslerengineering.com to Purchase"

NOTE:
CROSS HATCHING NOT SHOWN IN DEMOLISHED PIPING FOR CLARITY.

LOWER LEVEL DEMOLITION PLAN

0 2 4 6 FT
3/8"=1'-0"

LEGEND

- EXISTING PIPES TO RELOCATE
- EXISTING FEATURES TO REMAIN
- EXISTING FEATURES TO BE DEMOLISHED

SCALE VERIFICATION	DRAWN BY	TWL
BAR IS ONE INCH LONG ON ORIGINAL DRAWING	CHECKED BY	ERP
	APPROVED BY	RWH
	ISSUE DATE	MARCH 2020
	PROJECT NUMBER	193216-04-001

NO.	DATE	INITIALS	REVISION DESCRIPTIONS

ROBERT W. HOLDEN, II REGISTERED No. 10000096 STATE OF INDIANA PROFESSIONAL ENGINEER 03/04/2020

WESSLER ENGINEERING
More than a Project™

WASTEWATER SYSTEM EXPANSION
CITY OF FRANKFORT, INDIANA
CONTRACT A - WASTEWATER TREATMENT PLANT

EXISTING AERATION BUILDING - DEMOLITION PLAN

SHEET NO. **7D4**

PAGE NO. 60

Drawing: J:\Frankfort\Projects\193216 Frankfort WWTP Exp\CAD 04-001\DWGs\Sheets\Area 7 - EX-BNR\7D BNR-DEMO.dwg | Layout: 7D4 | Plotted: 03/04/20 @ 02:56:58 | LastSavedBy: CurtisG

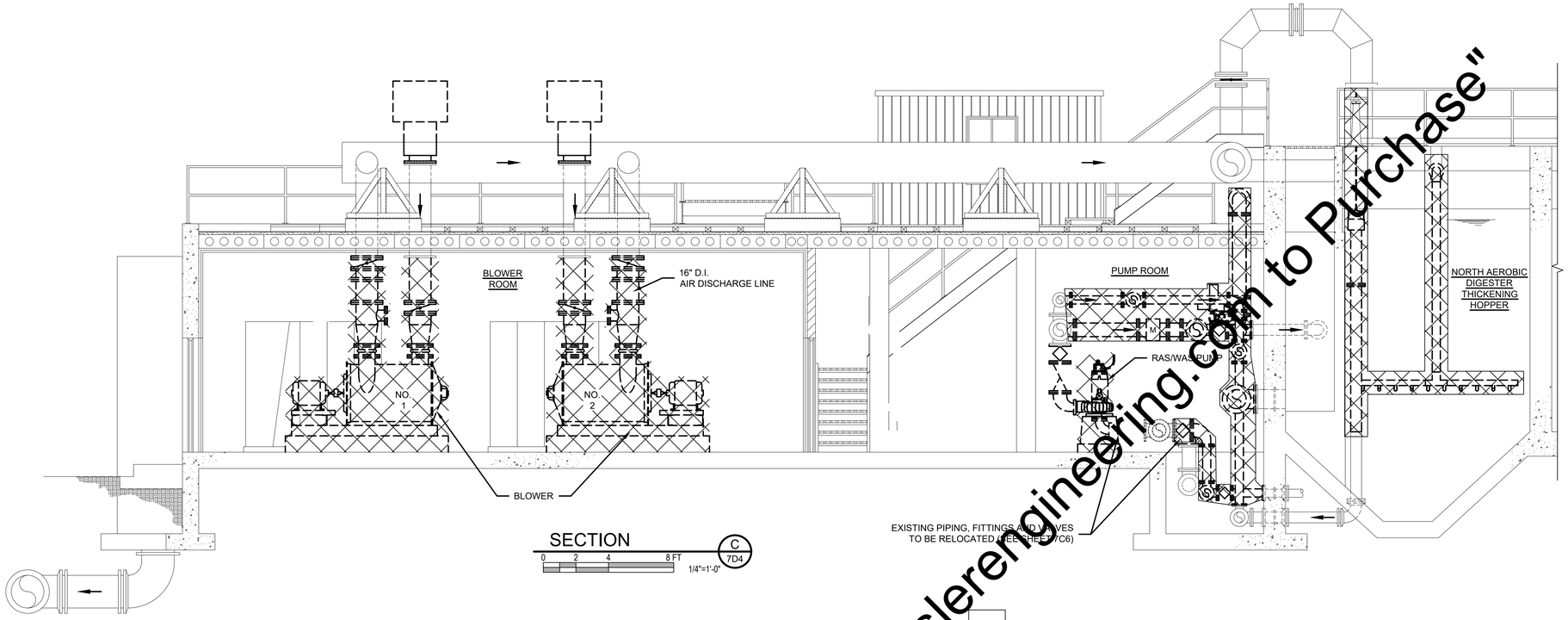

SECTION C 7D4
0 2 4 8 FT
1/4"=1'-0"

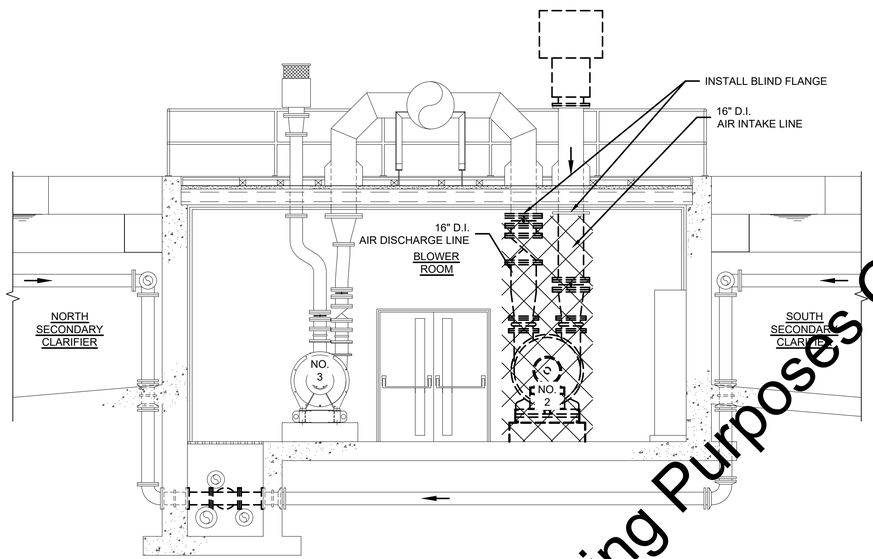

SECTION D 7D4
0 2 4 8 FT
1/4"=1'-0"

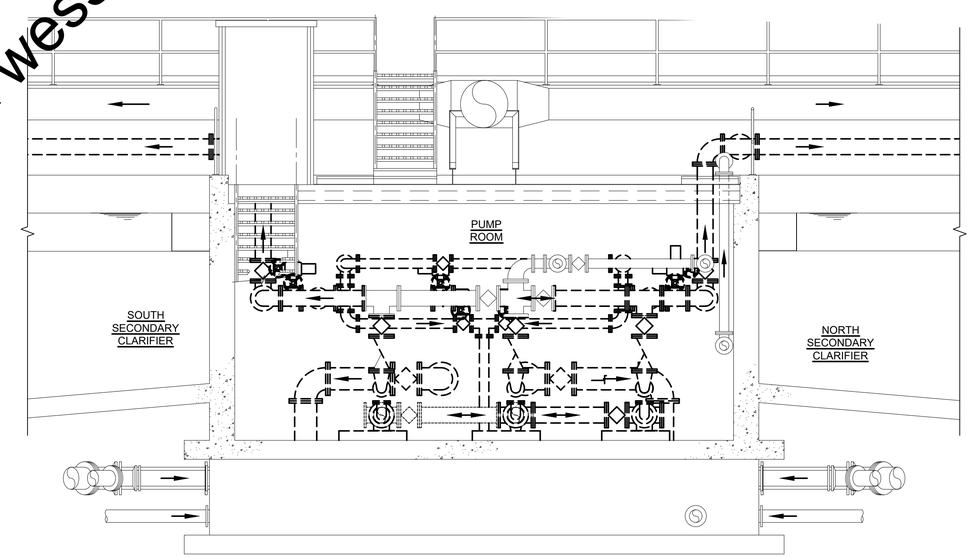

NOTE:
CROSS HATCHING NOT SHOWN IN SLUDGE PIPING FOR CLARITY.

SECTION E 7D4
0 2 4 8 FT
1/4"=1'-0"

LEGEND

- EXISTING PIPES TO RELOCATE
- EXISTING FEATURES TO REMAIN
- EXISTING FEATURES TO BE DEMOLISHED

SCALE VERIFICATION	DRAWN BY	TWL
BAR IS ONE INCH LONG ON ORIGINAL DRAWING	CHECKED BY	ERP
	APPROVED BY	RWH
	ISSUE DATE	MARCH 2020
	PROJECT NUMBER	193216-04-001

NO.	DATE	INITIALS	REVISION DESCRIPTIONS

ROBERT W. HOLDEN, II REGISTERED No. 10000096 STATE OF INDIANA PROFESSIONAL ENGINEER 03/04/2020

WESSLER ENGINEERING
More than a Project™

WASTEWATER SYSTEM EXPANSION
CITY OF FRANKFORT, INDIANA
CONTRACT A - WASTEWATER TREATMENT PLANT

EXISTING AERATION BUILDING - DEMOLITION SECTIONS

SHEET NO. **7D5**

PAGE NO. 61

"For Viewing Purposes Only - Visit wesslerengineering.com to Purchase"

Drawing: J:\Frankfort\Projects\193216 Frankfort WWTP Exp\CAD 04-001\DWG\Sheets\Area 7 - EX-BNR\7D BNR-DEMO.dwg | Layout: 7D5 | Plotted: 03/04/20 @ 02:59:07 | LastSavedBy: CurtisG

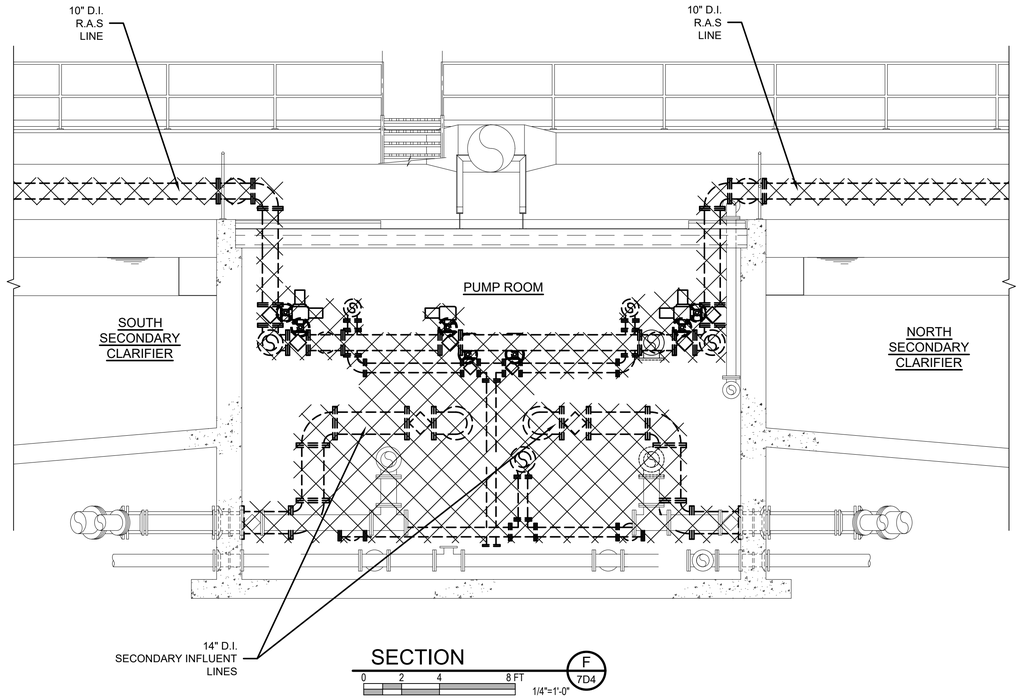

SECTION F 7D4

0 2 4 8 FT 1/4"=1'-0"

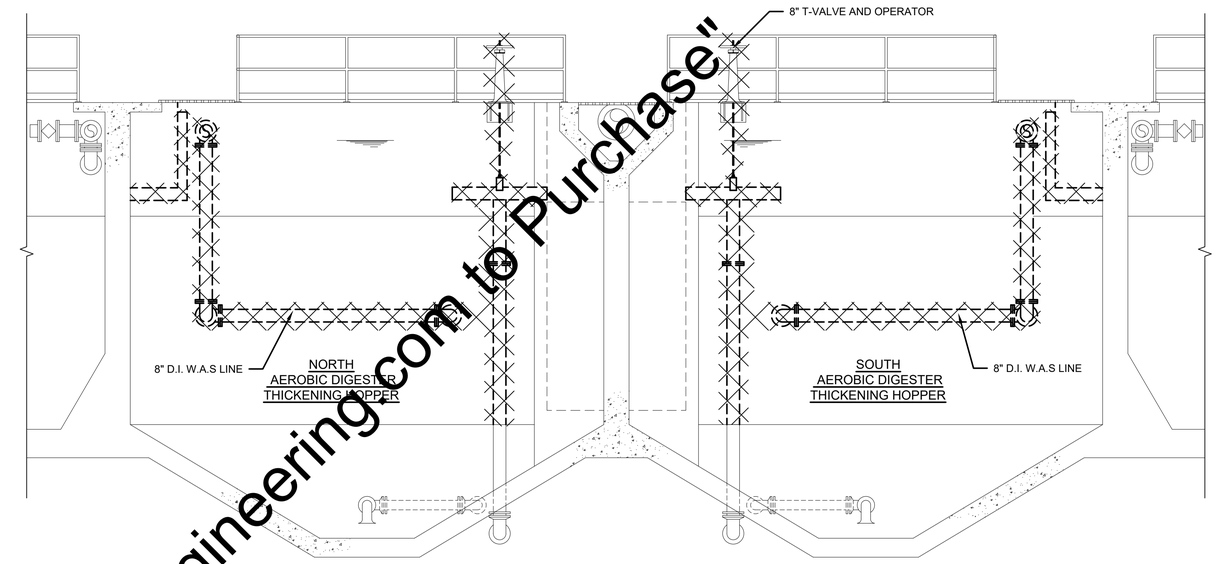

SECTION G 7D6

0 2 4 8 FT 1/4"=1'-0"

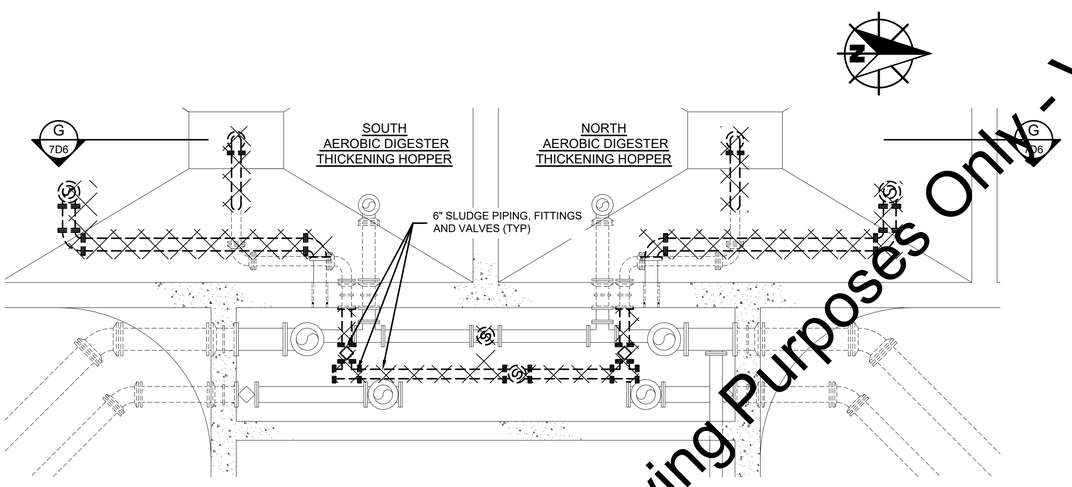

RAS / WAS SUMP LEVEL ENLARGED PLAN

0 2 4 8 FT 1/4"=1'-0"

LEGEND

- EXISTING PIPES TO RELOCATE
- EXISTING FEATURES TO REMAIN
- EXISTING FEATURES TO BE DEMOLISHED

"For Viewing Purposes Only - Visit wesslerengineering.com to Purchase"

SCALE VERIFICATION	DRAWN BY	TWL
BAR IS ONE INCH LONG ON ORIGINAL DRAWING	CHECKED BY	RRP
	APPROVED BY	RWH
	ISSUE DATE	MARCH 2020
	PROJECT NUMBER	193216-04-001

NO.	DATE	INITIALS	REVISION DESCRIPTIONS

ROBERT W. HOLDEN, II REGISTERED No. 10000096 STATE OF INDIANA PROFESSIONAL ENGINEER 03/04/2020

WESSLER ENGINEERING
More than a Project™

WASTEWATER SYSTEM EXPANSION

CITY OF FRANKFORT, INDIANA
CONTRACT A - WASTEWATER TREATMENT PLANT

MISCELLANEOUS - DEMOLITION PLANS AND SECTIONS

SHEET NO. **7D6**

PAGE NO. 62

Drawing: J:\Frankfort\Projects\193216 Frankfort WWTP Exp\CAD 04-001\DWG\Sheets\Area 7 - EX-BNR\7D BNR-DEMO.dwg | Layout: 7D6 | Plotted: 03/04/20 @ 03:01:31 | LastSavedBy: CurtisG

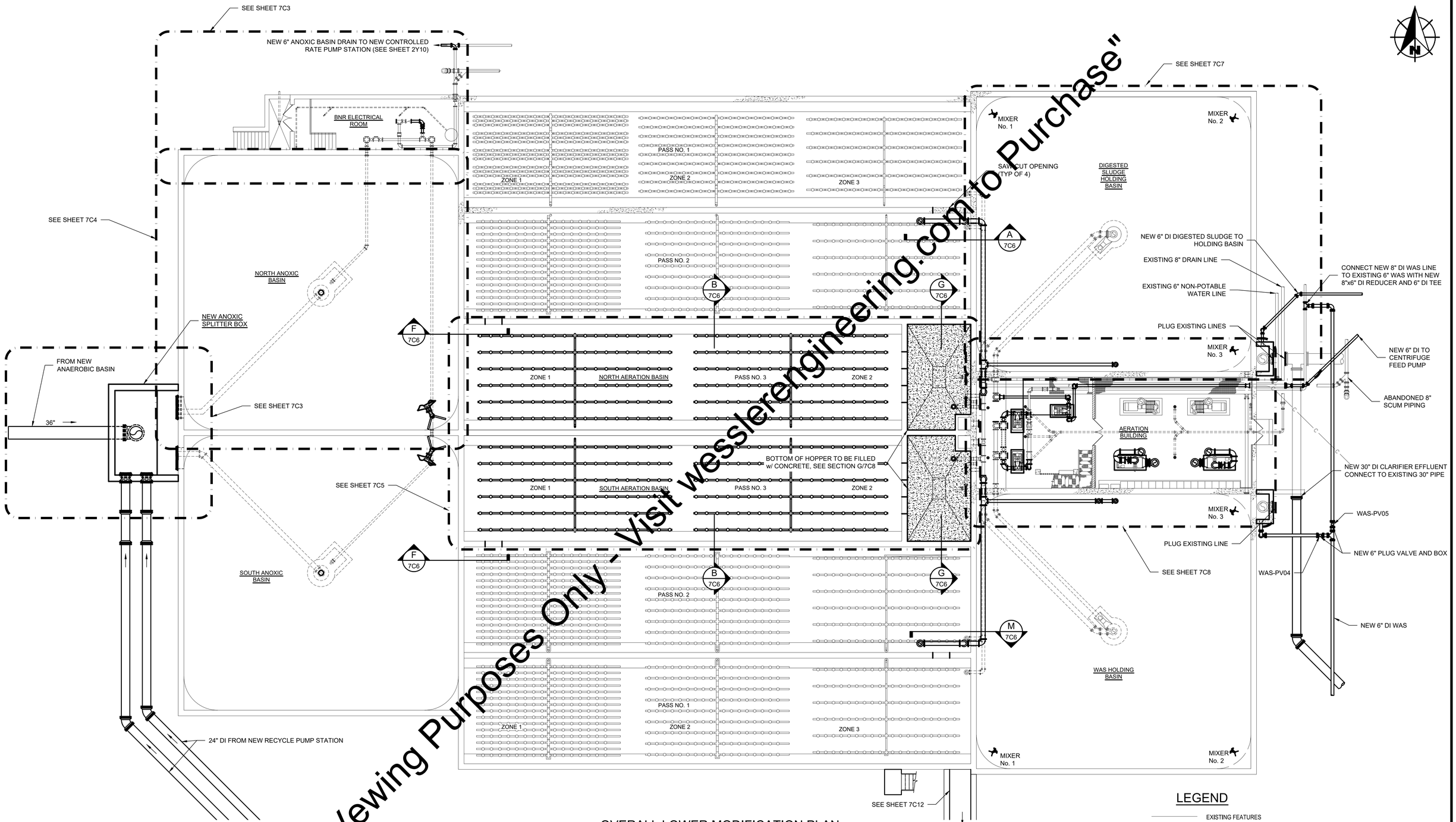

OVERALL LOWER MODIFICATION PLAN

0 5 10 20 FT
3/32"=1'-0"

"For Viewing Purposes Only - Visit wesslerengineering.com to Purchase"

SCALE VERIFICATION	DRAWN BY	MLN
BAR IS ONE INCH LONG ON ORIGINAL DRAWING	CHECKED BY	ERP
	APPROVED BY	RWH
	ISSUE DATE	MARCH 2020
	PROJECT NUMBER	193216-04-001

NO.	DATE	INITIALS	REVISION DESCRIPTIONS

ROBERT W. HOLDEN, II REGISTERED No. 10000096 STATE OF INDIANA PROFESSIONAL ENGINEER 03/04/2020

WESSLER ENGINEERING
More than a Project™

WASTEWATER SYSTEM EXPANSION

CITY OF FRANKFORT, INDIANA
CONTRACT A - WASTEWATER TREATMENT PLANT

BNR COMPLEX - OVERALL LOWER LEVEL MODIFICATIONS PLAN

SHEET NO.
7C1

PAGE NO.
63

Drawing: J:\Frankfort\Projects\193216 Frankfort WWTP Exp\CAD 04-001\DWG\Sheets\Area 7 - EX-BNR\7C BNR-MOD.dwg | Layout: 7C1 | Plotted: 03/04/20 @ 03:03:51 | LastSavedBy: CurtisG

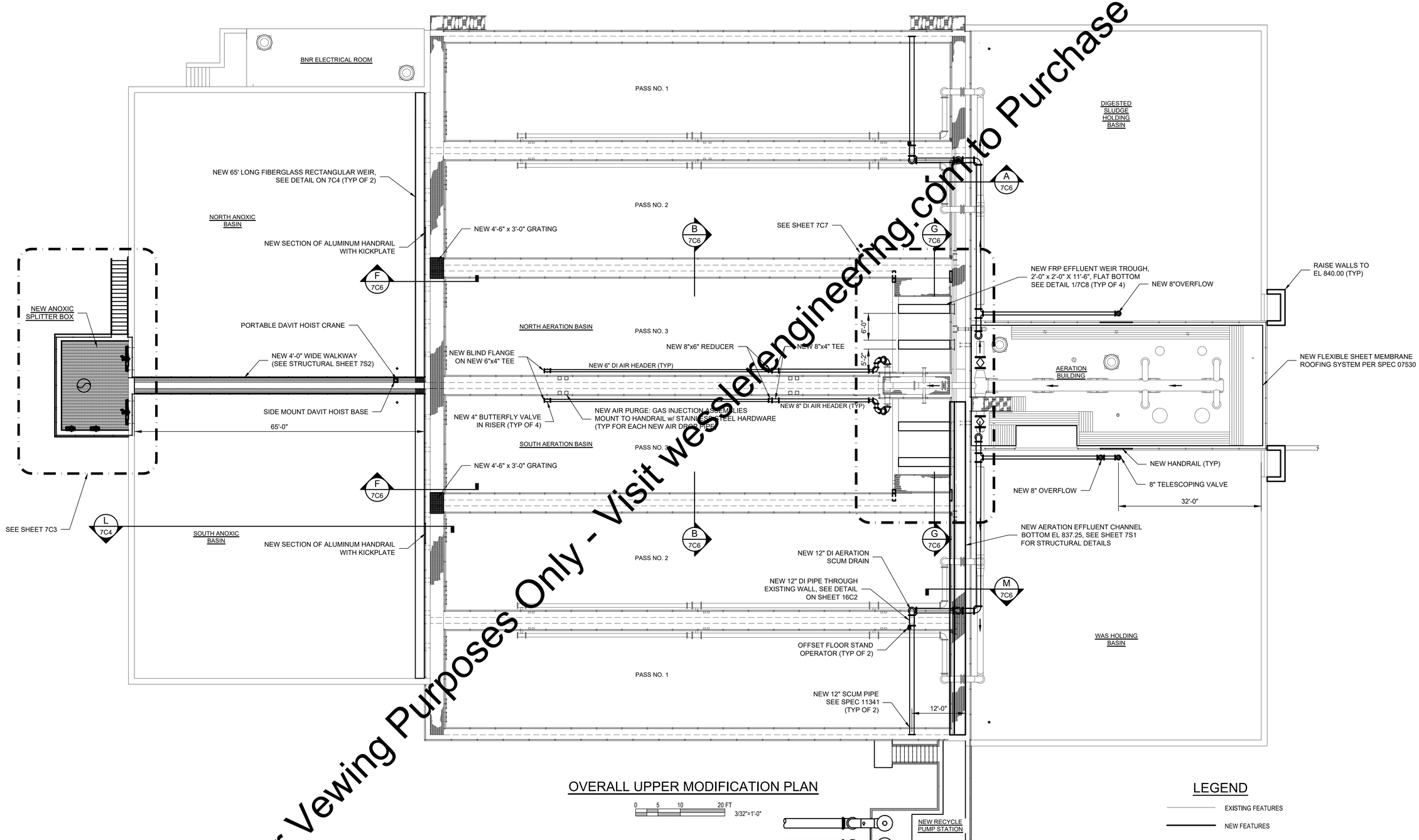

OVERALL UPPER MODIFICATION PLAN

0 5 10 20 FT
3/32"=1'-0"

LEGEND

EXISTING FEATURES
NEW FEATURES

"For Viewing Purposes Only - Visit wesslerengineering.com to Purchase"

SCALE VERIFICATION	DRAWN BY	MLN
BAR IS ONE INCH LONG ON ORIGINAL DRAWING	CHECKED BY	PRS
	APPROVED BY	RWH
	ISSUE DATE	MARCH 2020
	PROJECT NUMBER	193216-04-001

NO.	DATE	INITIALS	REVISION DESCRIPTIONS

ROBERT W. HOLDEN, II REGISTERED No. 10000096 STATE OF INDIANA PROFESSIONAL ENGINEER 03/04/2020

WESSLER ENGINEERING
More than a Project™

WASTEWATER SYSTEM EXPANSION
CITY OF FRANKFORT, INDIANA
CONTRACT A - WASTEWATER TREATMENT PLANT

BNR COMPLEX - OVERALL UPPER LEVEL MODIFICATIONS PLAN

SHEET NO. **7C2**

PAGE NO. 64

Drawing: J:\Frankfort\Projects\193216 Frankfort WWTP Exp\CAD 04-001\DWG\Sheets\Area 7 - EX-BNR\7C BNR-MOD.dwg | Layout: 7C2 | Plotted: 03/04/20 @ 03:05:33 | LastSavedBy: CurtisG

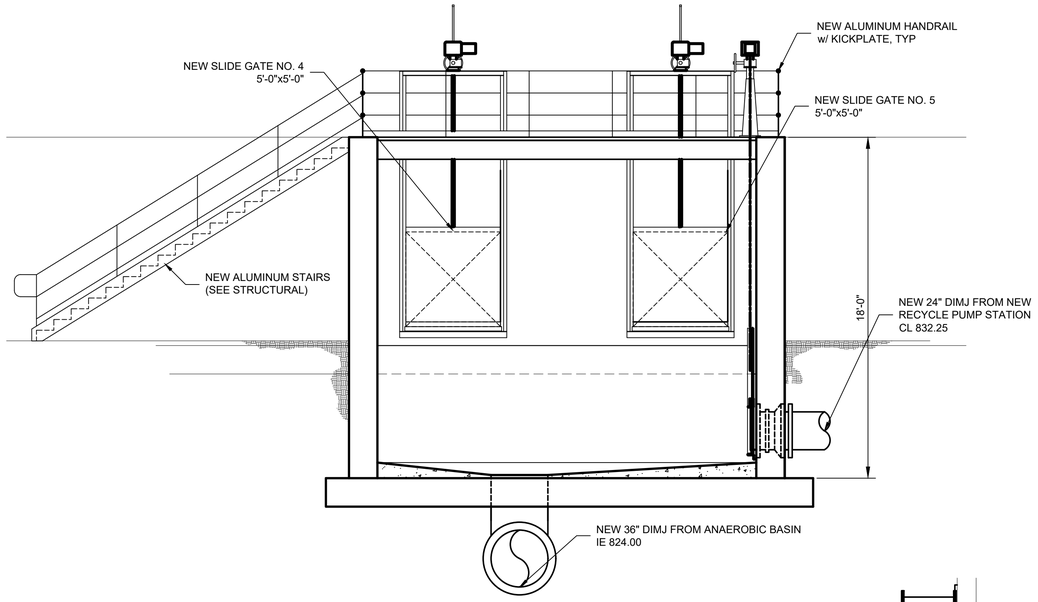

SECTION G 7C3
0 2 4 8 FT 1/4"=1'-0"

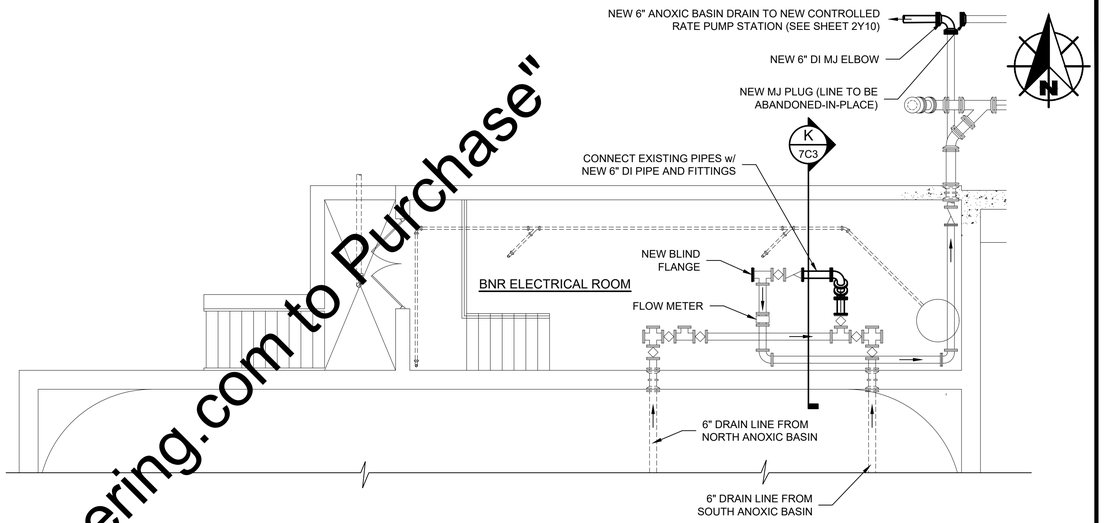

BNR ELECTRICAL ROOM - MODIFICATIONS PLAN
0 4 8 12 FT 3/16"=1'-0"

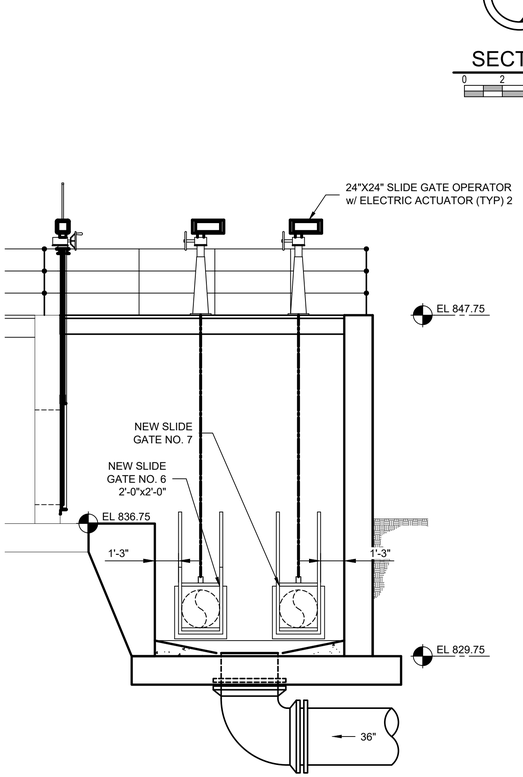

SECTION H 7C3
0 2 4 8 FT 1/4"=1'-0"

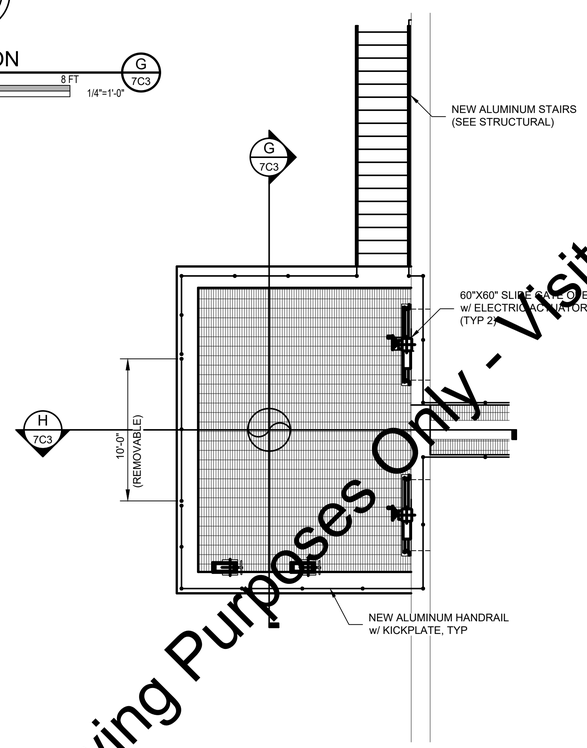

NEW INFLUENT SPLITTER BOX - UPPER PLAN
0 4 8 12 FT 3/16"=1'-0"

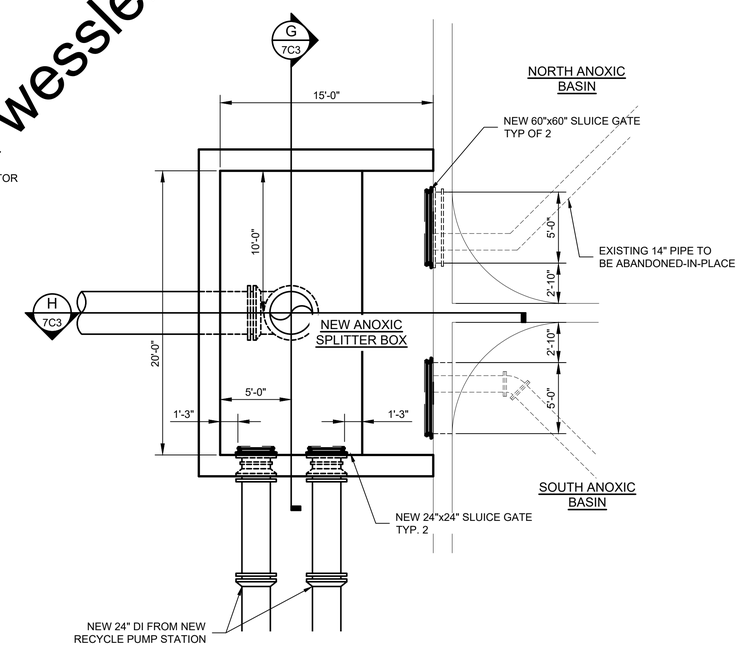

NEW INFLUENT SPLITTER BOX - LOWER PLAN
0 4 8 12 FT 3/16"=1'-0"

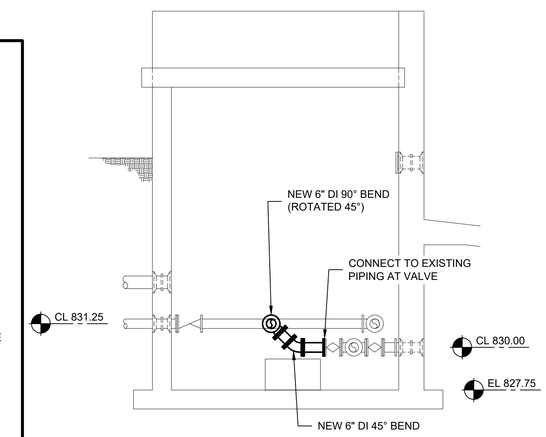

SECTION K 7C3
0 2 4 8 FT 1/4"=1'-0"

LEGEND
EXISTING FEATURES
NEW FEATURES

SCALE VERIFICATION	DRAWN BY	MLN
BAR IS ONE INCH LONG ON ORIGINAL DRAWING	CHECKED BY	RRP
	APPROVED BY	RWH
	ISSUE DATE	MARCH 2020
	PROJECT NUMBER	193216-04-001

NO.	DATE	INITIALS	REVISION DESCRIPTIONS

ROBERT W. HOLDEN II REGISTERED No. 10000096 STATE OF INDIANA PROFESSIONAL ENGINEER 03/04/2020

WESSLER ENGINEERING
More than a Project™

WASTEWATER SYSTEM EXPANSION
CITY OF FRANKFORT, INDIANA
CONTRACT A - WASTEWATER TREATMENT PLANT

BNR COMPLEX - PLANS AND SECTIONS

SHEET NO. **7C3**
PAGE NO. 65

"For Viewing Purposes Only - Visit wesslerengineering.com to Purchase"

Drawing: J:\Frankfort\Projects\193216 Frankfort WWTP Exp\CAD 04-001\DWG\Sheets\Area 7 - EX-BNR\7C BNR-MOD.dwg | Layout: 7C3 | Plotted: 03/02/20 @ 10:25:12 | LastSavedBy: MikeN

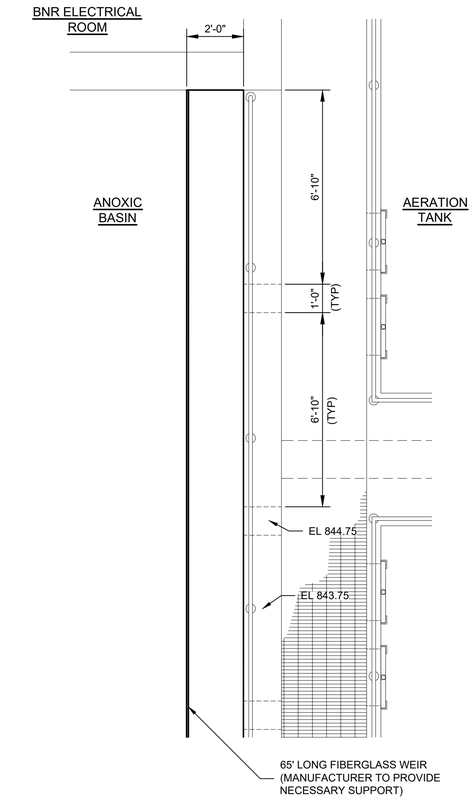

NEW FIBERGLASS WEIR PARTIAL PLAN

0 4 8 12 FT 3/16"=1'-0"

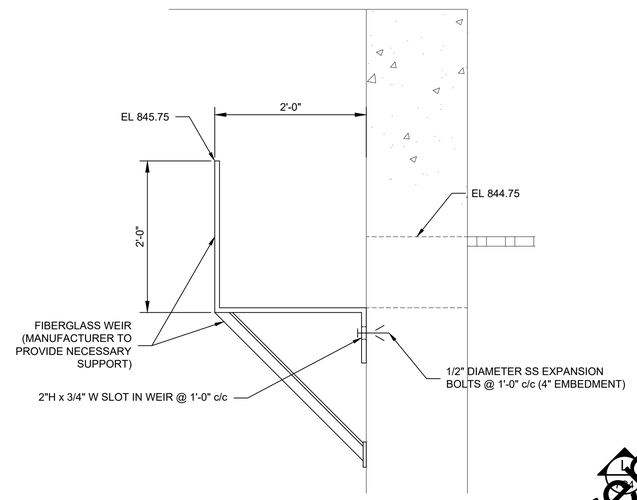

NEW FIBERGLASS WEIR DETAIL

0 4 8 12 FT 3/16"=1'-0"

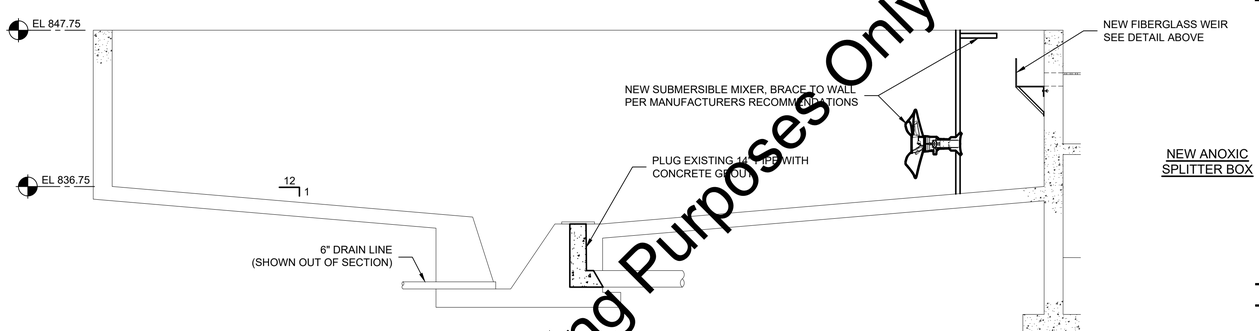

SECTION L 7C4

0 2 4 8 FT 1/4"=1'-0"

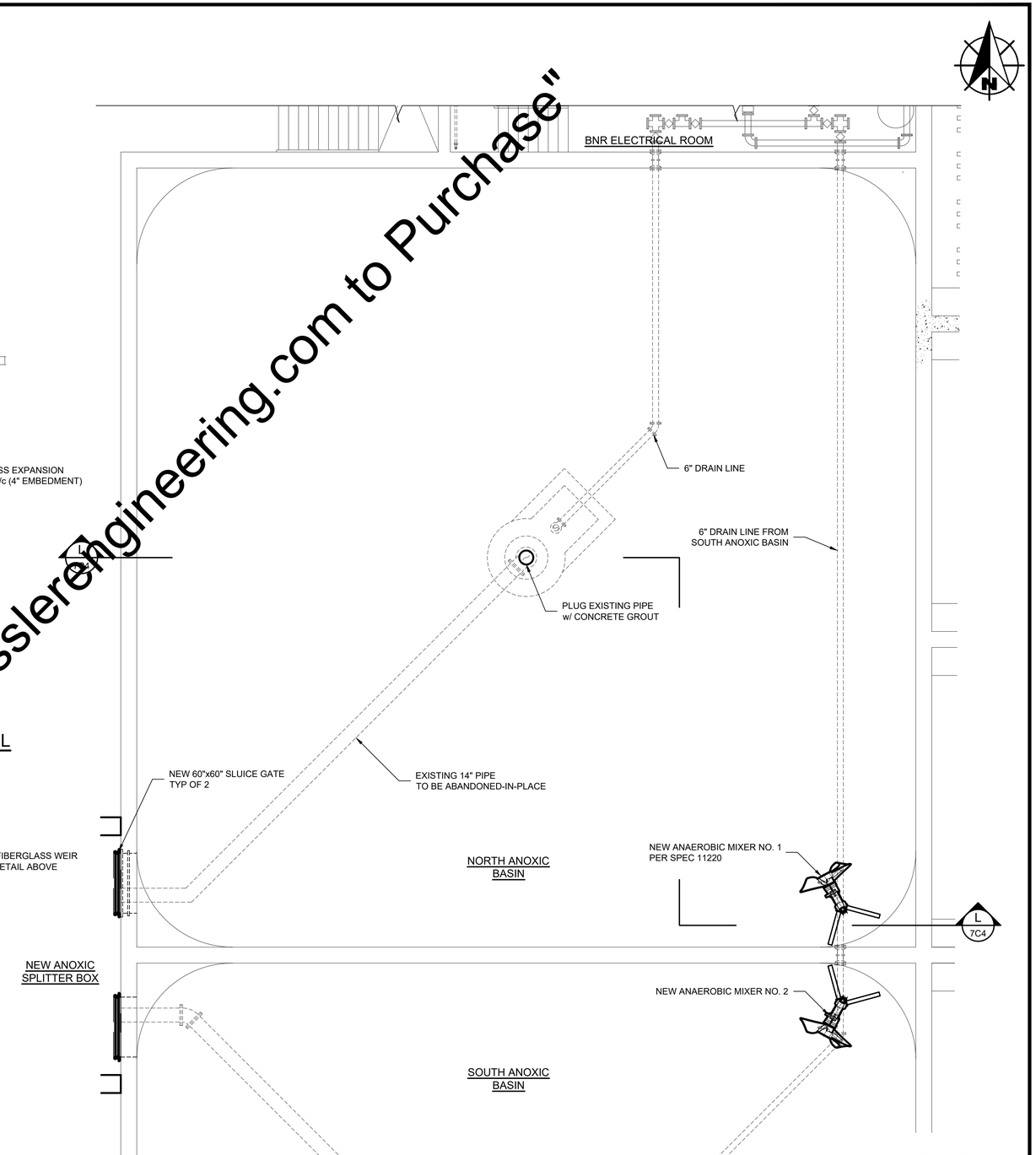

ANOXIC BASIN - LOWER LEVEL MODIFICATION PLAN

0 4 8 12 FT 3/16"=1'-0"

LEGEND

EXISTING FEATURES

NEW FEATURES

"For Viewing Purposes Only - Visit wesslerengineering.com to Purchase"

SCALE VERIFICATION	DRAWN BY	MLN
BAR IS ONE INCH LONG ON ORIGINAL DRAWING	CHECKED BY	PRP
	APPROVED BY	RWH
	ISSUE DATE	MARCH 2020
	PROJECT NUMBER	193216-04-001

NO.	DATE	INITIALS	REVISION DESCRIPTIONS

ROBERT W. HOLDEN, II REGISTERED No. 10000096 STATE OF INDIANA PROFESSIONAL ENGINEER 03/04/2020

WESSLER ENGINEERING
More than a Project™

WASTEWATER SYSTEM EXPANSION

CITY OF FRANKFORT, INDIANA
CONTRACT A - WASTEWATER TREATMENT PLANT

TYPICAL ANOXIC BASIN - PLANS, SECTION AND DETAIL

SHEET NO. **7C4**

PAGE NO. 66

Drawing: J:\Frankfort\Projects\193216 Frankfort WWTP Exp\CAD 04-001\DWG\Sheets\Area 7 - EX-BNR\7C BNR-MOD.dwg | Layout: 7C4 | Plotted: 02/28/20 @ 10:55:48 | LastSavedBy: JasonW

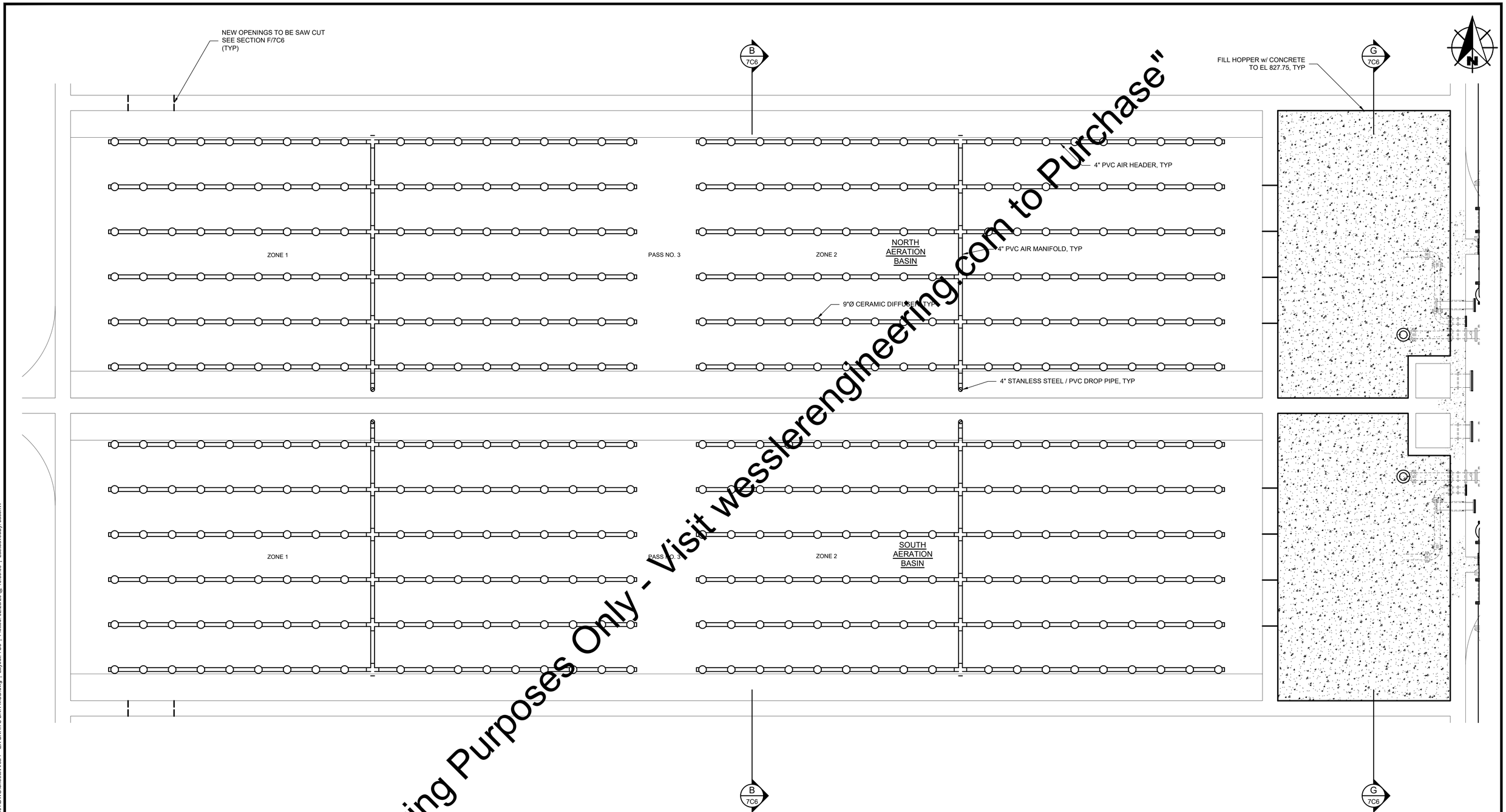

TYPICAL AERATION BASIN - LOWER LEVEL MODIFICATION PLAN

0 2 4 8 FT
1/4"=1'-0"

LEGEND

EXISTING FEATURES

NEW FEATURES

"For Vewing Purposes Only - Visit wesslerengineering.com to Purchase"

SCALE VERIFICATION	DRAWN BY	MLN
BAR IS ONE INCH LONG ON ORIGINAL DRAWING	CHECKED BY	PRP
	APPROVED BY	RWH
	ISSUE DATE	MARCH 2020
	PROJECT NUMBER	193216-04-001

NO.	DATE	INITIALS	REVISION DESCRIPTIONS

ROBERT W. HOLDEN, II
REGISTERED
No. 10000096
STATE OF INDIANA
PROFESSIONAL ENGINEER
03/04/2020

WESSLER ENGINEERING
More than a Project™

WASTEWATER SYSTEM EXPANSION

CITY OF FRANKFORT, INDIANA
CONTRACT A - WASTEWATER TREATMENT PLANT

TYPICAL WAS HOLDING BASIN - LOWER LEVEL MODIFICATION PLAN

SHEET NO.
7C5

PAGE NO.
67

Drawing: J:\Frankfort\Projects\193216 Frankfort WWTP Exp\CAD 04-001\DWG\Sheets\Area 7 - EX-BNR\7C BNR-MOD.dwg | Layout: 7C5 | Plotted: 02/28/20 @ 10:56:09 | LastSavedBy: JasonW

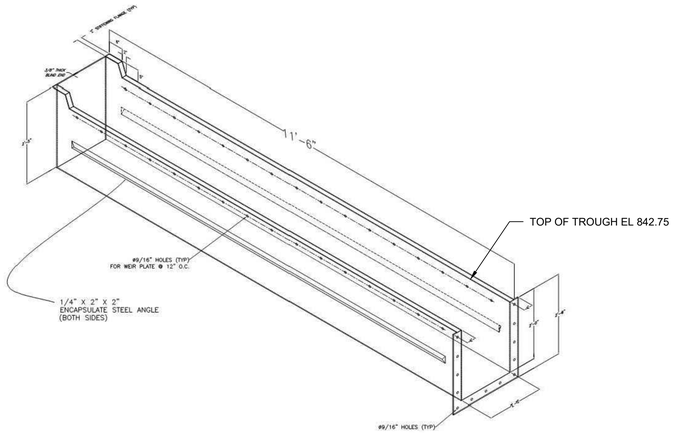

NEW EFFLUENT TROUGH DETAIL

SCALE: NONE

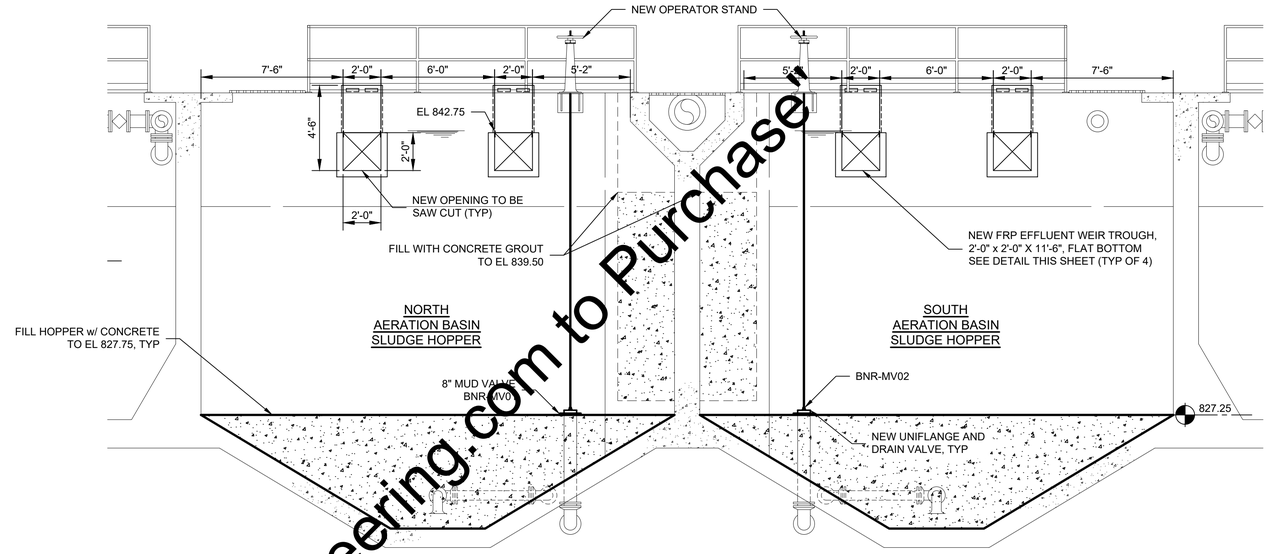

SECTION G / 7C1

0 2 4 8 FT 1/4"=1'-0"

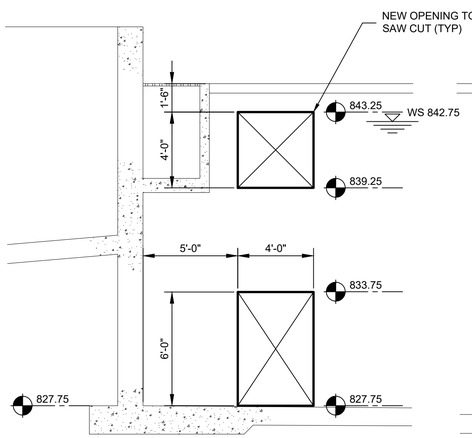

SECTION F / 7C1

0 2 4 8 FT 1/4"=1'-0"

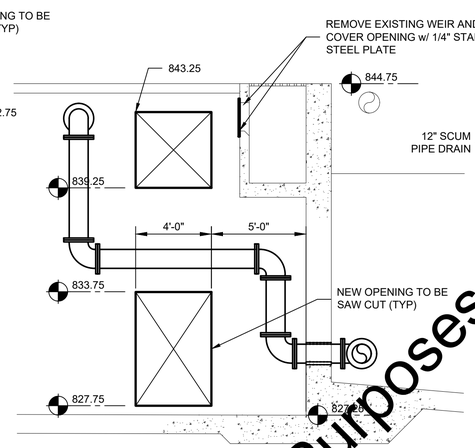

SECTION A / 7C1

0 2 4 8 FT 1/4"=1'-0"

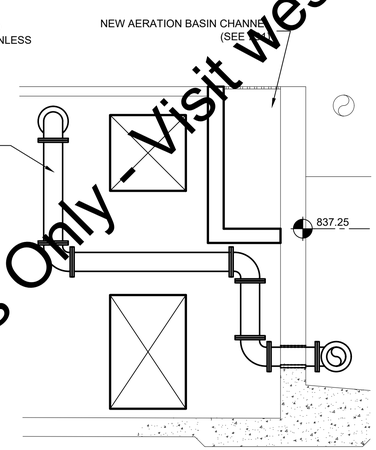

SECTION M / 7C1

0 2 4 8 FT 1/4"=1'-0"

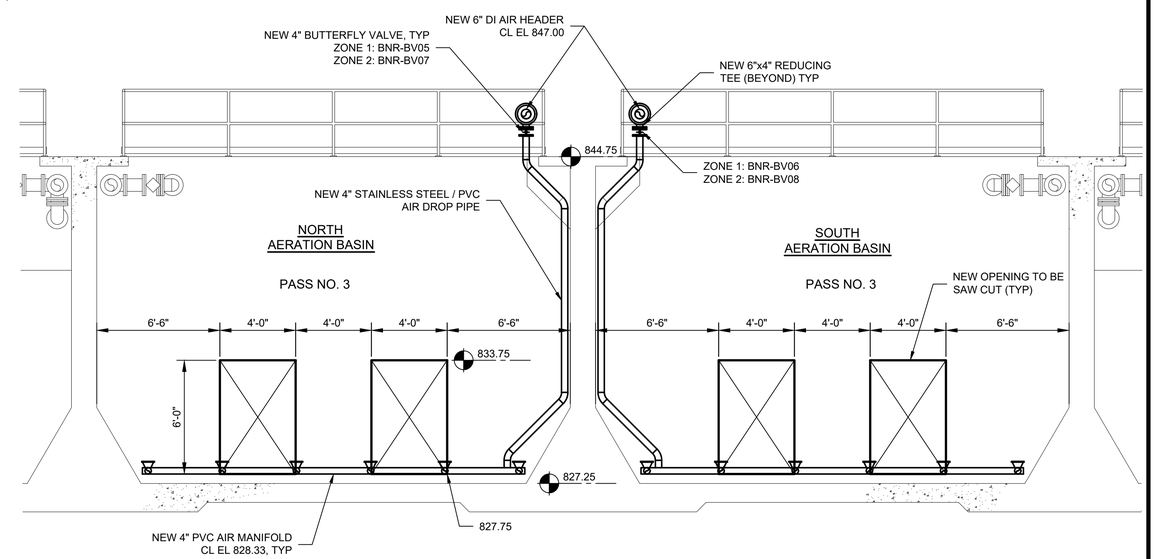

SECTION B / 7C1

0 2 4 8 FT 1/4"=1'-0"

LEGEND

EXISTING FEATURES

NEW FEATURES

SCALE VERIFICATION	DRAWN BY	MLN
BAR IS ONE INCH LONG ON ORIGINAL DRAWING	CHECKED BY	PRP
	APPROVED BY	RWH
	ISSUE DATE	MARCH 2020
	PROJECT NUMBER	193216-04-001

NO.	DATE	INITIALS	REVISION DESCRIPTIONS

ROBERT W. HOLDEN, II REGISTERED No. 10000096 STATE OF INDIANA PROFESSIONAL ENGINEER 03/04/2020

WESSLER ENGINEERING
More than a Project™

WASTEWATER SYSTEM EXPANSION

CITY OF FRANKFORT, INDIANA
CONTRACT A - WASTEWATER TREATMENT PLANT

AERATION BASIN MODIFICATIONS - SECTIONS

SHEET NO. **7C6**

PAGE NO. 68

Drawing: J:\Frankfort\Projects\193216 Frankfort WWTP Exp\CAD 04-001\DWG\Sheets\Area 7 - EX-BNR\7C BNR-MOD.dwg | Layout: 7C6 | Plotted: 02/28/20 @ 10:58:06 | LastSavedBy: JasonW

For Viewing Purposes Only - Visit wesslerengineering.com to Purchase

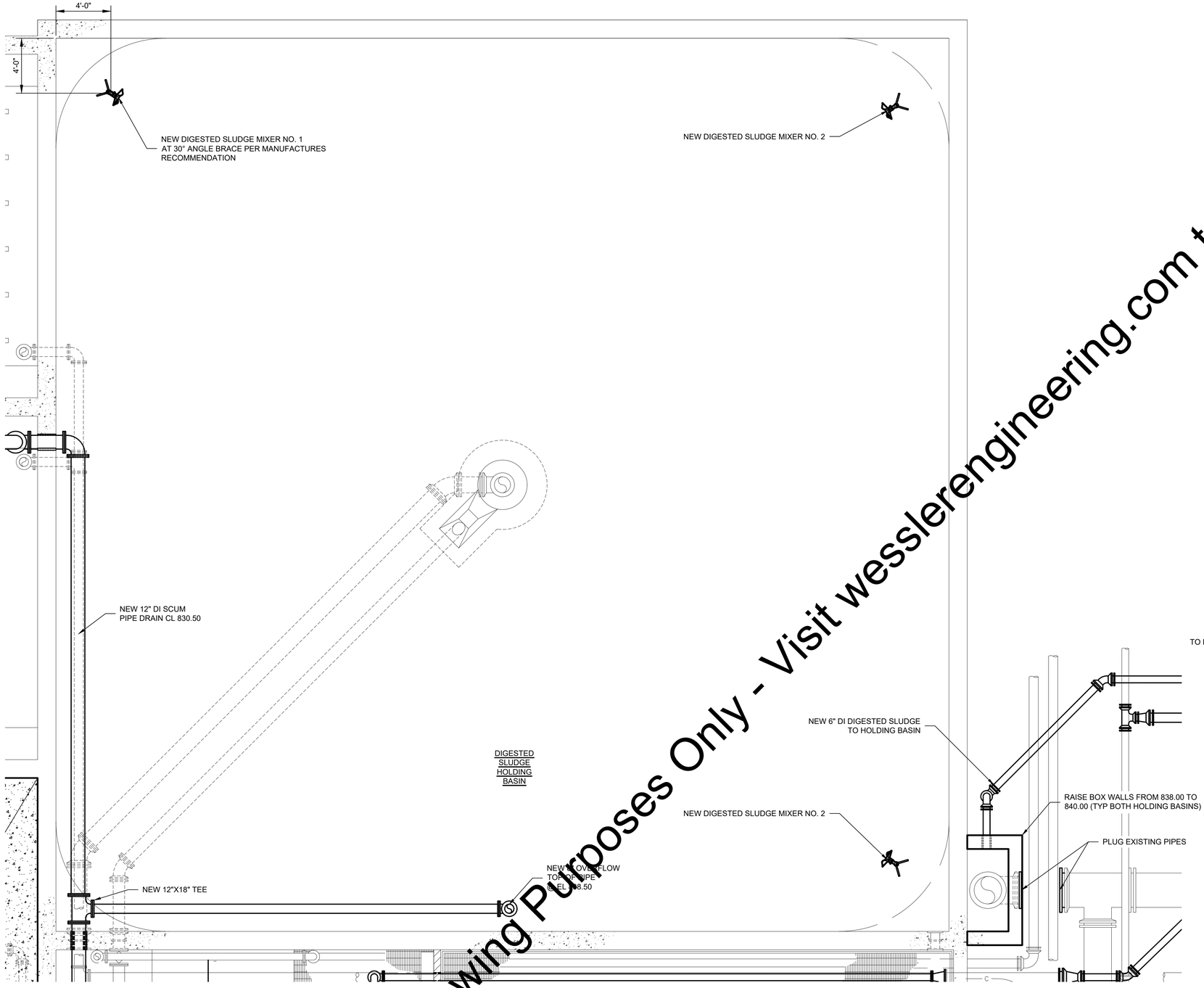

TYPICAL HOLDING BASIN - MODIFICATION PLAN

0 2 4 8 FT
1/4"=1'-0"

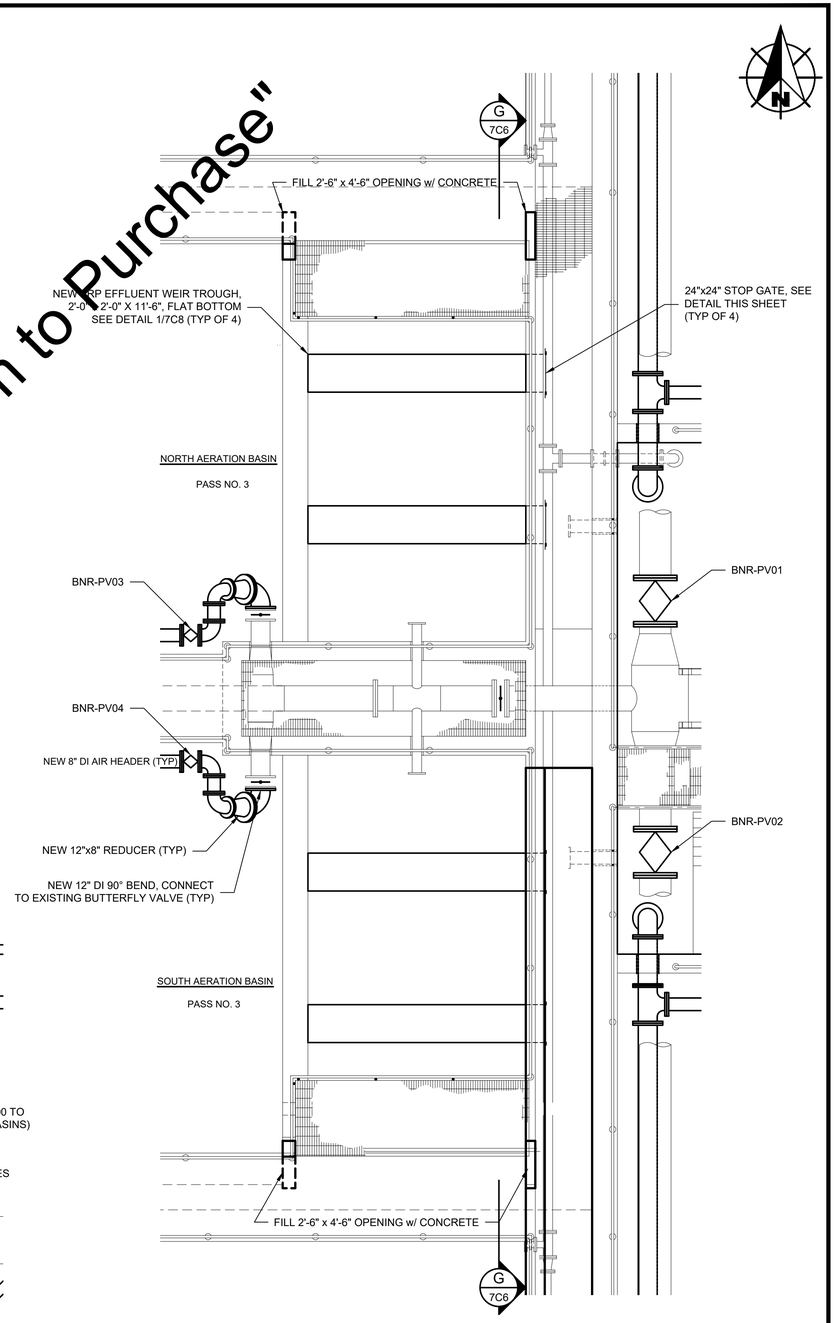

AERATION BASIN - NEW EFFLUENT WEIRS PLAN

LEGEND

EXISTING FEATURES

NEW FEATURES

For Viewing Purposes Only - Visit wesslerengineering.com to Purchase"

SCALE VERIFICATION	DRAWN BY	MLH
BAR IS ONE INCH LONG ON ORIGINAL DRAWING	CHECKED BY	RRP
	APPROVED BY	RWH
	ISSUE DATE	MARCH 2020
	PROJECT NUMBER	193216-04-001

NO.	DATE	INITIALS	REVISION DESCRIPTIONS

ROBERT W. HOLDEN, II REGISTERED No. 10000096 STATE OF INDIANA PROFESSIONAL ENGINEER 03/04/2020

WESSLER ENGINEERING
More than a Project™

WASTEWATER SYSTEM EXPANSION

CITY OF FRANKFORT, INDIANA
CONTRACT A - WASTEWATER TREATMENT PLANT

TYPICAL DIGESTED SLUDGE HOLDING BASIN - MODIFICATION PLAN

SHEET NO.
7C7

PAGE NO.
69

Drawing: J:\Frankfort\Projects\193216 Frankfort WWTP Exp\CAD 04-001\DWG\Sheets\Area 7 - EX-BNR\7C BNR-MOD.dwg | Layout: 7C7 | Plotted: 02/28/20 @ 10:58:56 | LastSavedBy: JasonW

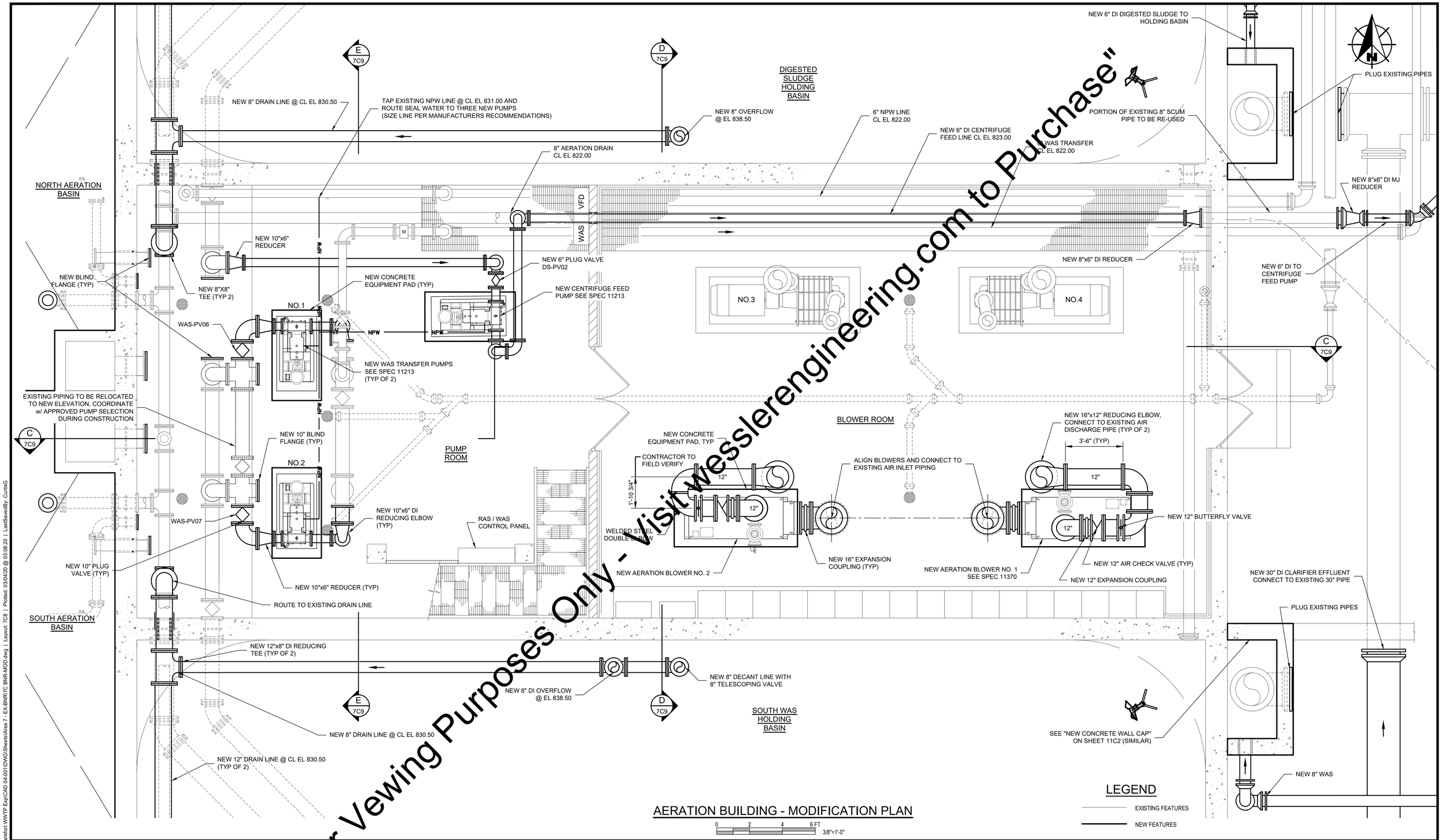

AERATION BUILDING - MODIFICATION PLAN

"For Vewing Purposes Only - Visit wesslerengineering.com to Purchase"

SCALE VERIFICATION	DRAWN BY	MLH
BAR IS ONE INCH LONG ON ORIGINAL DRAWING	CHECKED BY	PRP
	APPROVED BY	RWH
	ISSUE DATE	MARCH 2020
	PROJECT NUMBER	193216-04-001

NO.	DATE	INITIALS	REVISION DESCRIPTIONS

ROBERT W. HOLDEN II REGISTERED No. 10000096 STATE OF INDIANA PROFESSIONAL ENGINEER 03/04/2020

WESSLER ENGINEERING
More than a Project™

WASTEWATER SYSTEM EXPANSION
CITY OF FRANKFORT, INDIANA
CONTRACT A - WASTEWATER TREATMENT PLANT

AERATION BUILDING - MODIFICATION PLAN

SHEET NO. **7C8**

PAGE NO. 70

Drawing: J:\Frankfort\Projects\193216 Frankfort WWTP Exp\CAD 04-001\DWG\Sheets\Area 7 - EX-BNR\7C BNR-MOD.dwg | Layout: 7C8 | Plotted: 03/04/20 @ 03:08:20 | LastSavedBy: CurtisG

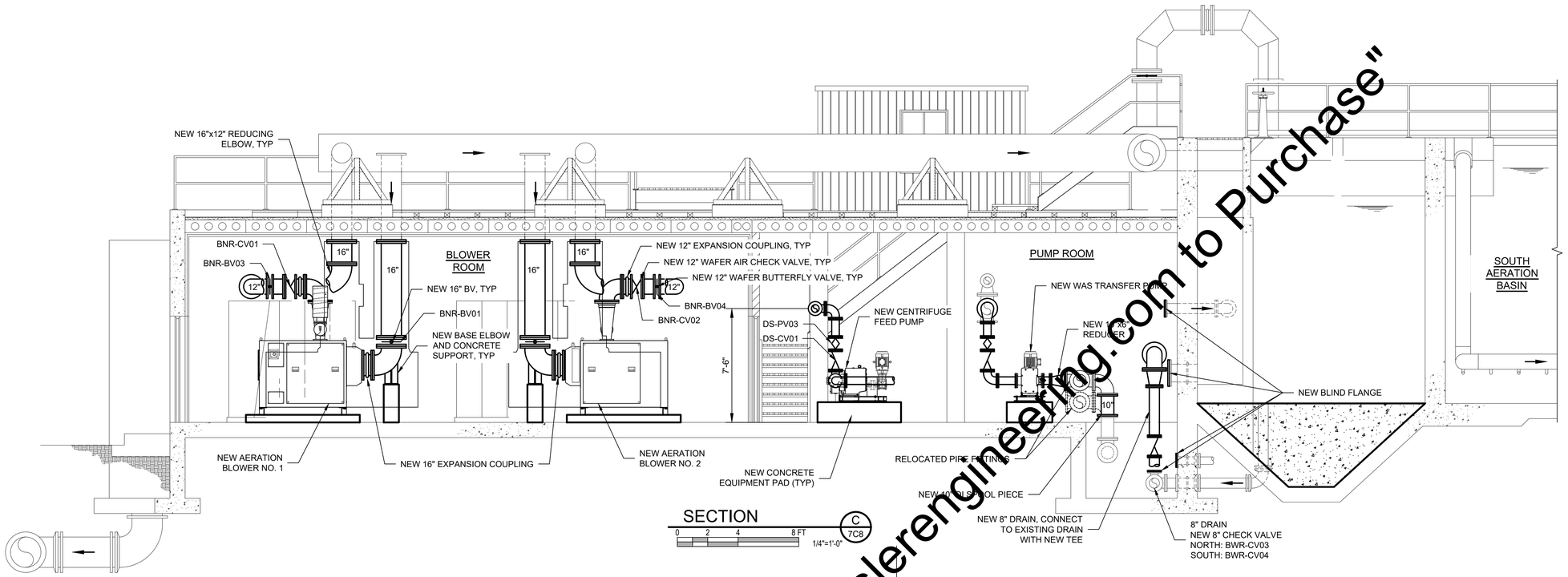

SECTION C 7C8
0 2 4 8 FT
1/4"=1'-0"

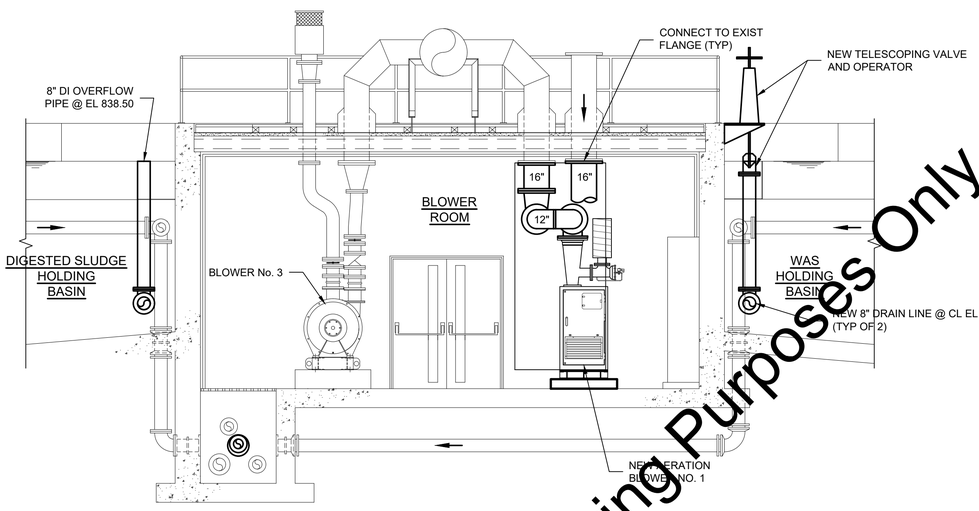

SECTION D 7C8
0 2 4 8 FT
1/4"=1'-0"

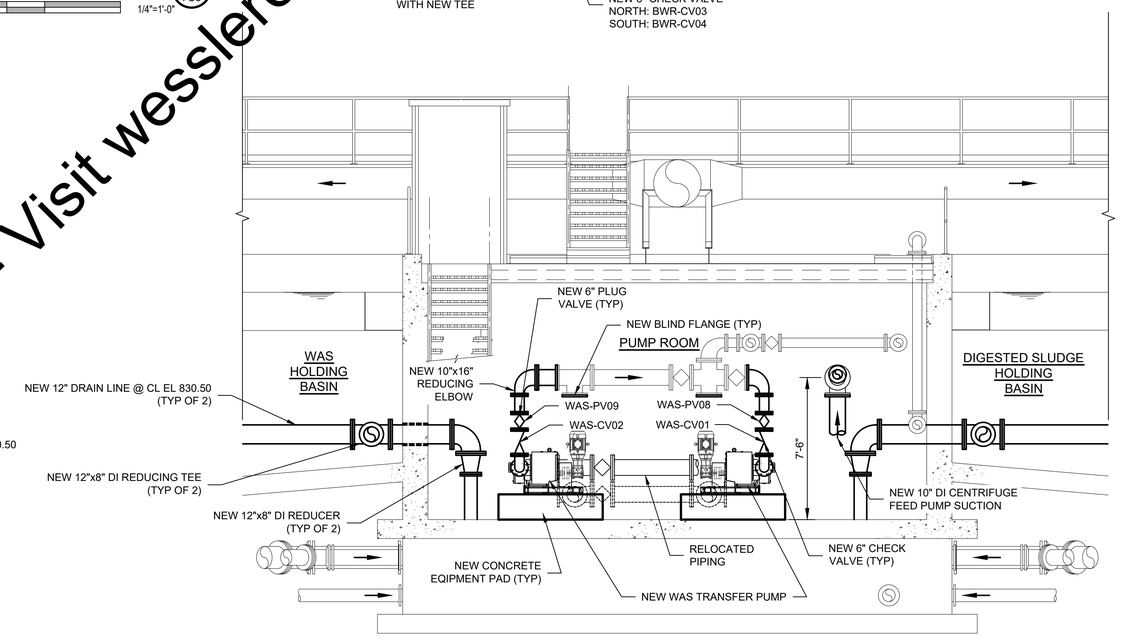

SECTION E 7C8
0 2 4 8 FT
1/4"=1'-0"

LEGEND

EXISTING FEATURES

NEW FEATURES

"For Viewing Purposes Only - Visit wesslerengineering.com to Purchase"

SCALE VERIFICATION	DRAWN BY	MLH
BAR IS ONE INCH LONG ON ORIGINAL DRAWING	CHECKED BY	BRP
	APPROVED BY	RWH
	ISSUE DATE	MARCH 2020
	PROJECT NUMBER	193216-04-001

NO.	DATE	INITIALS	REVISION DESCRIPTIONS

ROBERT W. HOLDER II REGISTERED No. 10000096 STATE OF INDIANA PROFESSIONAL ENGINEER 03/04/2020

WESSLER ENGINEERING
More than a Project™

WASTEWATER SYSTEM EXPANSION

CITY OF FRANKFORT, INDIANA
CONTRACT A - WASTEWATER TREATMENT PLANT

AERATION BUILDING - MODIFICATION SECTIONS

SHEET NO. **7C9**

PAGE NO. 71

Drawing: J:\Frankfort\Projects\193216 Frankfort WWTP Exp\CAD 04-001\DWG\Sheets\Area 7 - EX-BNR\7C BNR-MOD.dwg | Layout: 7C9 | Plotted: 02/28/20 @ 11:00:40 | LastSavedBy: JasonW

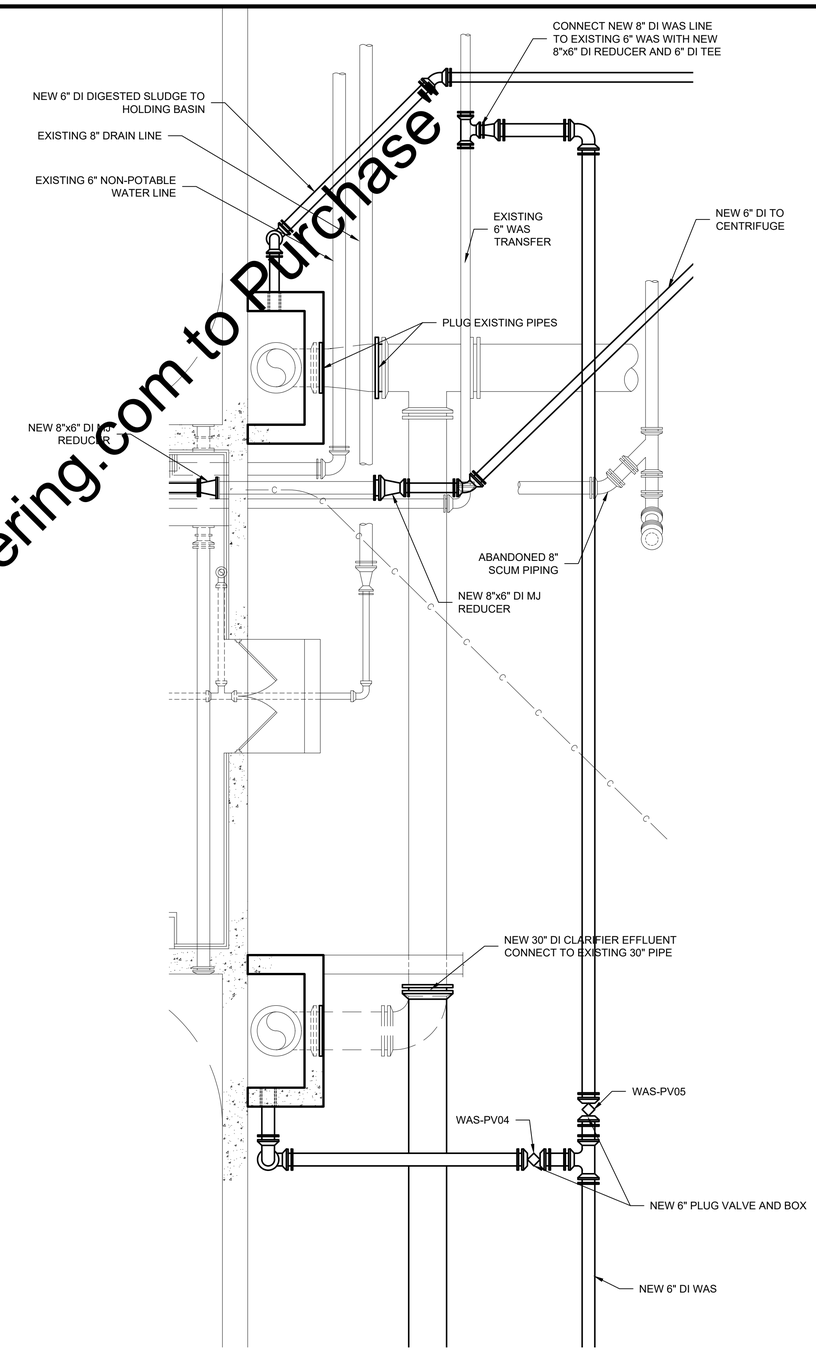

ENLARGED YARD PIPING PLAN - EAST SIDE OF BNR COMPLEX

0 2 4 8 FT
1/4"=1'-0"

LEGEND

EXISTING FEATURES

NEW FEATURES

For Vewing Purposes Only - Visit wesslerengineering.com to Purchase

SCALE VERIFICATION	DRAWN BY	MLH
BAR IS ONE INCH LONG ON ORIGINAL DRAWING	CHECKED BY	BRP
	APPROVED BY	RWH
	ISSUE DATE	MARCH 2020
	PROJECT NUMBER	193216-04-001

NO.	DATE	INITIALS	REVISION DESCRIPTIONS

ROBERT W. HOLDEN, II REGISTERED No. 10000096 STATE OF INDIANA PROFESSIONAL ENGINEER 03/04/2020

WESSLER ENGINEERING
More than a Project™

WASTEWATER SYSTEM EXPANSION

CITY OF FRANKFORT, INDIANA
CONTRACT A - WASTEWATER TREATMENT PLANT

AERATION BUILDING - ENLARGED PIPING PLAN

SHEET NO.
7C10

PAGE NO.
72

Drawing: J:\Frankfort\Projects\193216 Frankfort WWTP Exp\CAD 04-001\DWG\Sheets\Area 7 - EX-BNR\7C BNR-MOD.dwg | Layout: 7C10 | Plotted: 02/28/20 @ 11:01:05 | LastSavedBy: JasonW

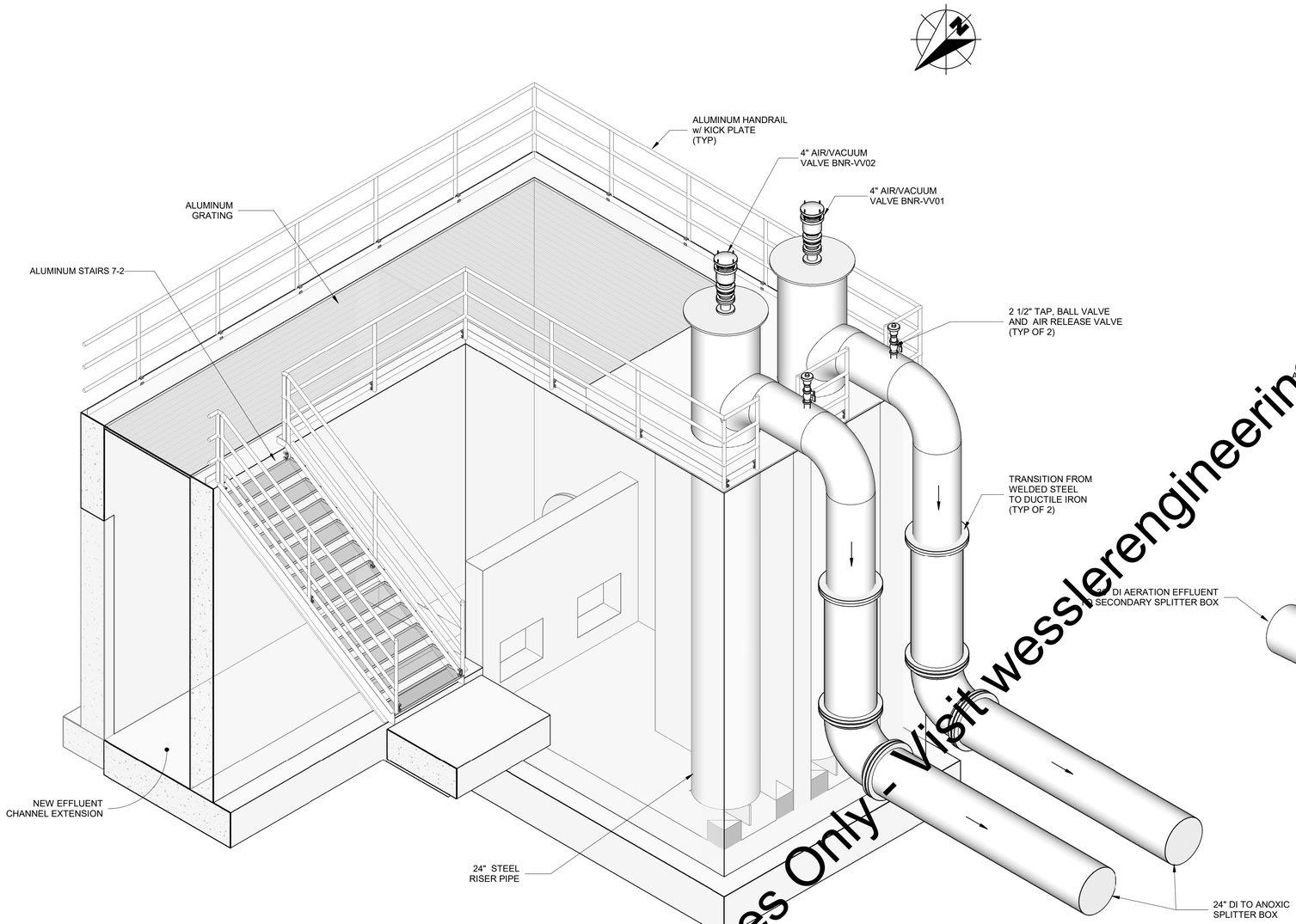

NORTHWEST PERSPECTIVE VIEW

SCALE: NONE

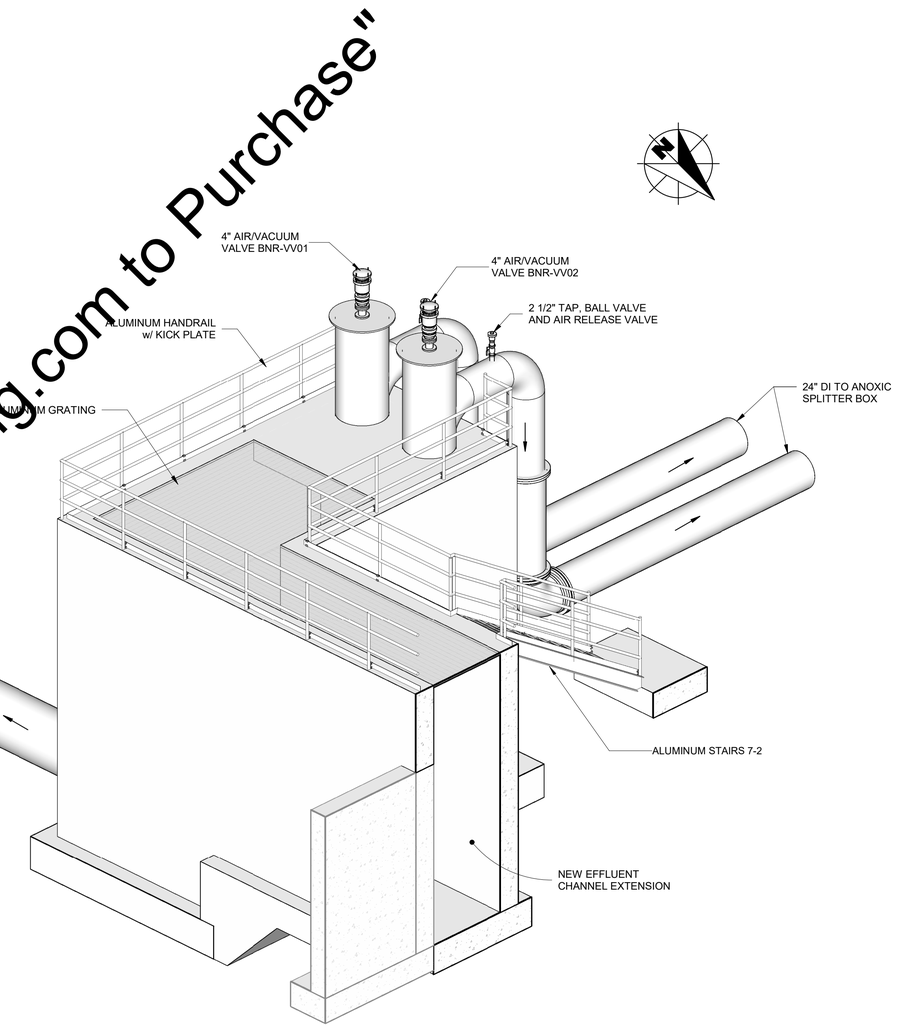

NORTHEAST PERSPECTIVE VIEW

SCALE: NONE

"For Viewing Purposes Only - Visit wesslerengineering.com to Purchase"

SCALE VERIFICATION	DRAWN BY	JLN
BAR IS ONE INCH LONG ON ORIGINAL DRAWING	CHECKED BY	BRP
	APPROVED BY	RWH
	ISSUE DATE	MARCH 2020
	PROJECT NUMBER	193216-04-001

NO.	DATE	INITIALS	REVISION DESCRIPTION

ROBERT W. HOLDEN II REGISTERED No. 10000096 STATE OF INDIANA PROFESSIONAL ENGINEER 3/4/2020

WESSLER ENGINEERING

More than a Project™

WASTEWATER SYSTEM EXPANSION

CITY OF FRANKFORT, INDIANA

CONTRACT A - WASTEWATER TREATMENT PLANT

NEW RECYCLE PUMP STATION

PERSPECTIVE VIEW

SHEET NO. **7C11**

PAGE NO. 73

Plotted: 2/28/2020 9:51:00 AM C:\users\JonathanL\Documents\193216-RECYCLE PUMP STA_CENTRAL - R19_JonathanL_WE.rvt

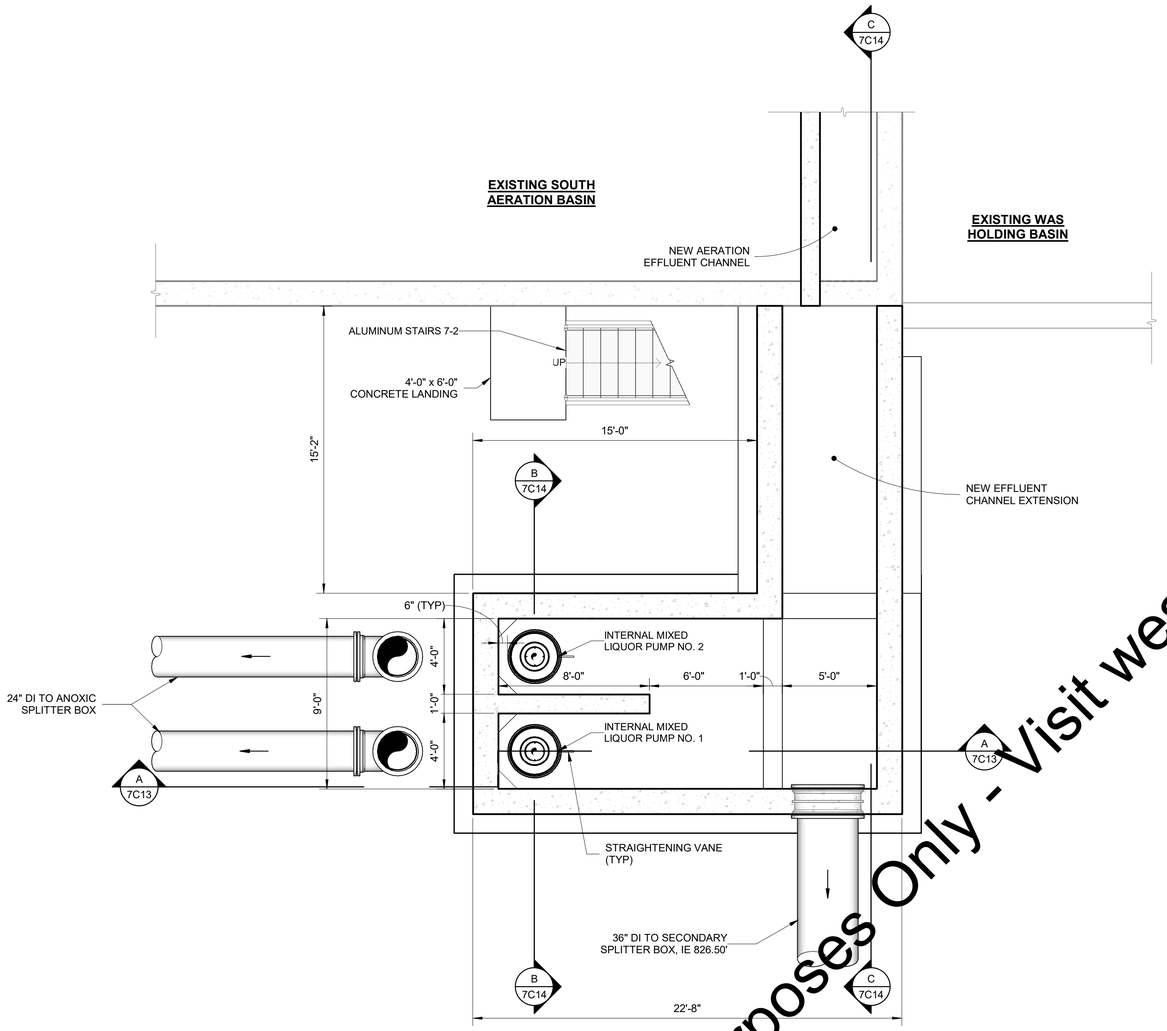

LOWER PLAN

0 2 4 8 FT 1/4"=1'-0"

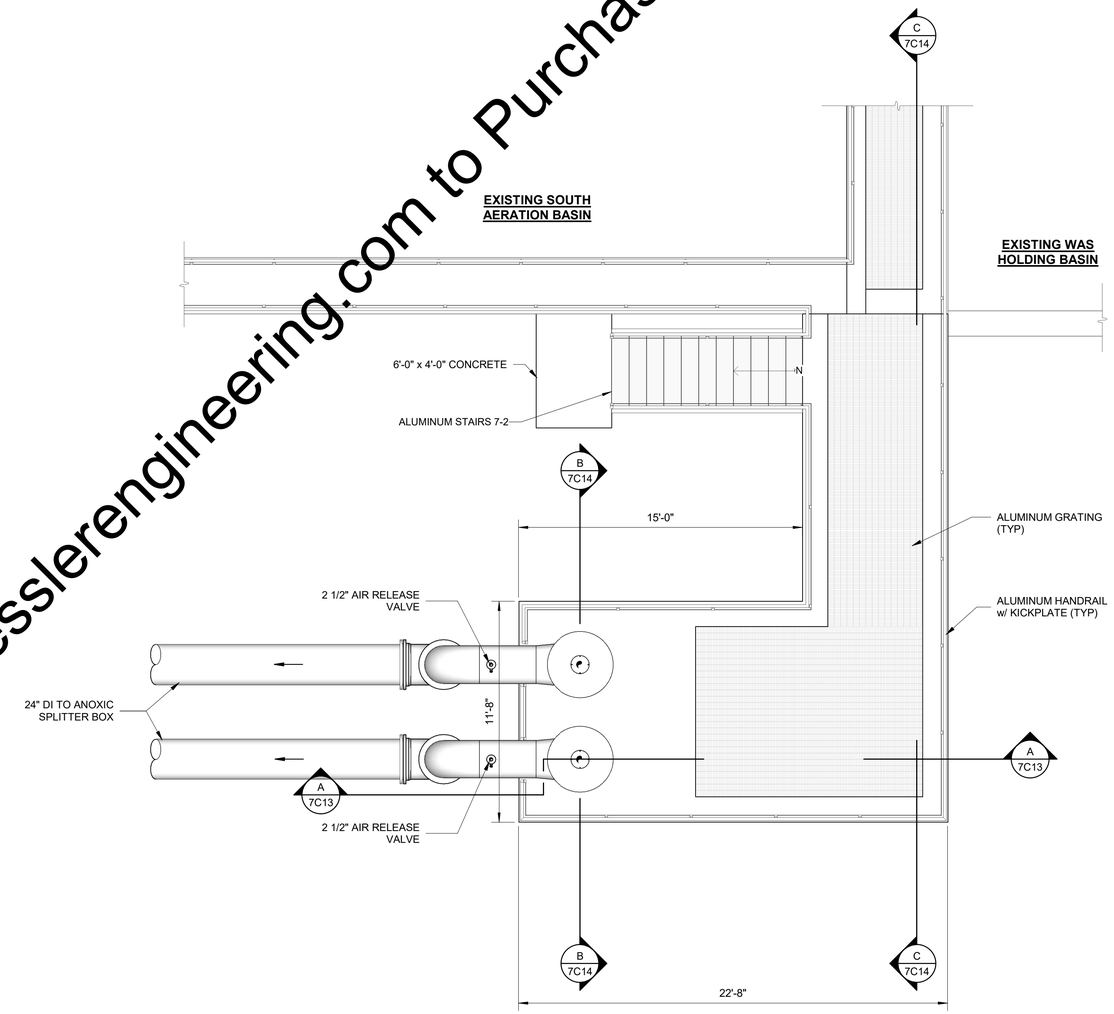

UPPER LEVEL PLAN

0 2 4 8 FT 1/4"=1'-0"

"For Viewing Purposes Only - Visit wesslerengineering.com to Purchase"

SCALE VERIFICATION	DRAWN BY	MLN
BAR IS ONE INCH LONG ON ORIGINAL DRAWING	CHECKED BY	BRP
	APPROVED BY	RWH
	ISSUE DATE	MARCH 2020
	PROJECT NUMBER	193216-04-001

NO.	DATE	INITIALS	REVISION DESCRIPTION

ROBERT W. HOLDEN, II REGISTERED No. 10000096 STATE OF INDIANA PROFESSIONAL ENGINEER 3/4/2020

WESSLER ENGINEERING
More than a Project™

WASTEWATER SYSTEM EXPANSION
CITY OF FRANKFORT, INDIANA
CONTRACT A - WASTEWATER TREATMENT PLANT

NEW RECYCLE PUMP STATION
PLANS

SHEET NO. **7C12**

PAGE NO. 74

Plotted: 2/26/2020 9:51:02 AM C:\users\Jonathan\Documents\193216-RECYCLE PUMP STA_CENTRAL - R19_Jonathan_WE.rvt

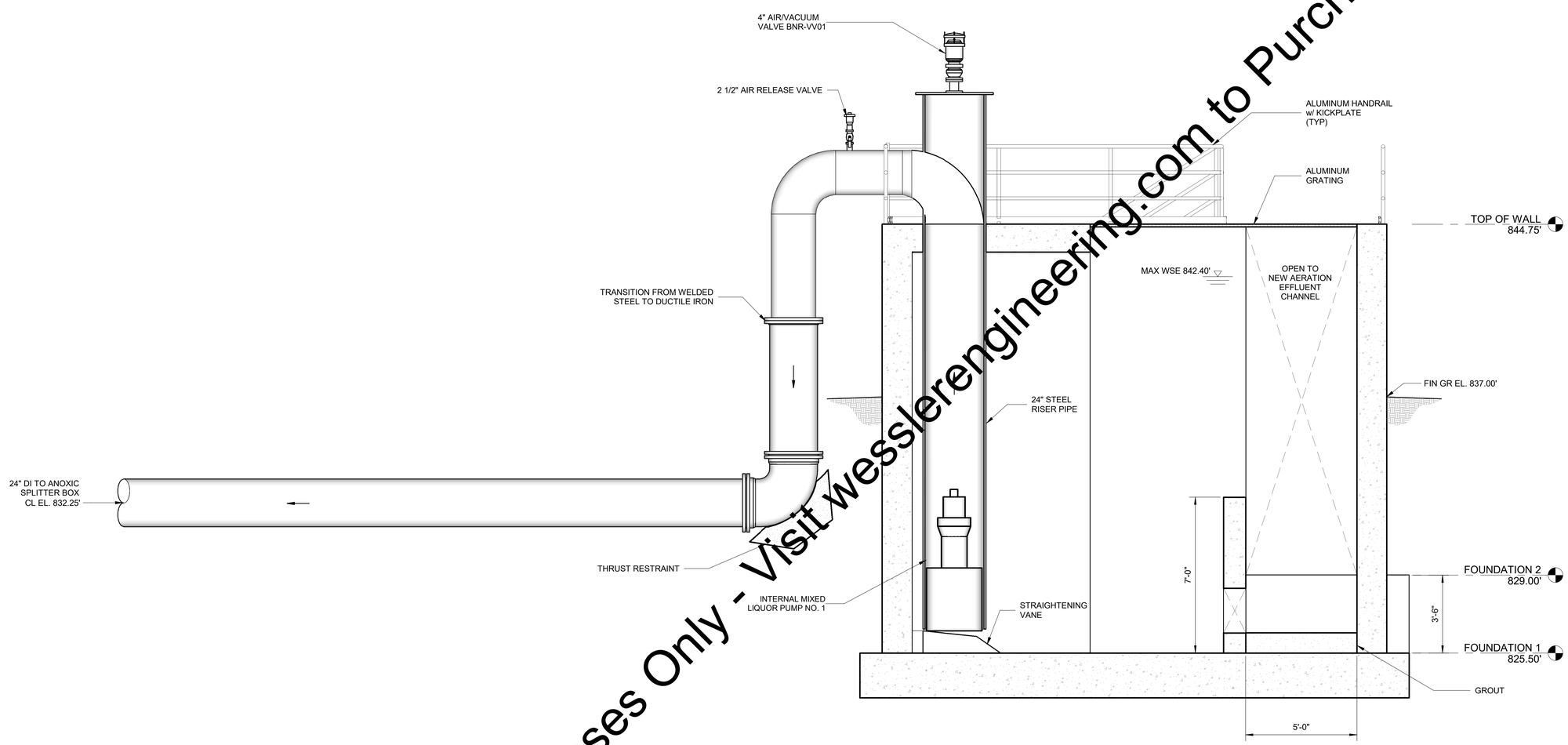

SECTION A 7C12

0 2 4 6 FT
3/8"=1'-0"

For Vewing Purposes Only - Visit wesslerengineering.com to Purchase"

SCALE VERIFICATION	DRAWN BY	MLN
BAR IS ONE INCH LONG ON ORIGINAL DRAWING	CHECKED BY	BRP
	APPROVED BY	RWH
	ISSUE DATE	MARCH 2020
	PROJECT NUMBER	193216-04-001

NO.	DATE	INITIALS	REVISION DESCRIPTION

ROBERT W. HOLDEN, II REGISTERED No. 10000096 STATE OF INDIANA PROFESSIONAL ENGINEER 3/4/2020

WESSLER ENGINEERING
More than a Project™

WASTEWATER SYSTEM EXPANSION
CITY OF FRANKFORT, INDIANA
CONTRACT A - WASTEWATER TREATMENT PLANT

NEW RECYCLE PUMP STATION
SECTION

SHEET NO. **7C13**
PAGE NO. 75

Plotted: 3/4/2020 3:18:34 PM C:\users\CurtisG\Documents\193216-RECYCLE PUMP STA_CENTRAL - R19_CurtisGrannan.rvt

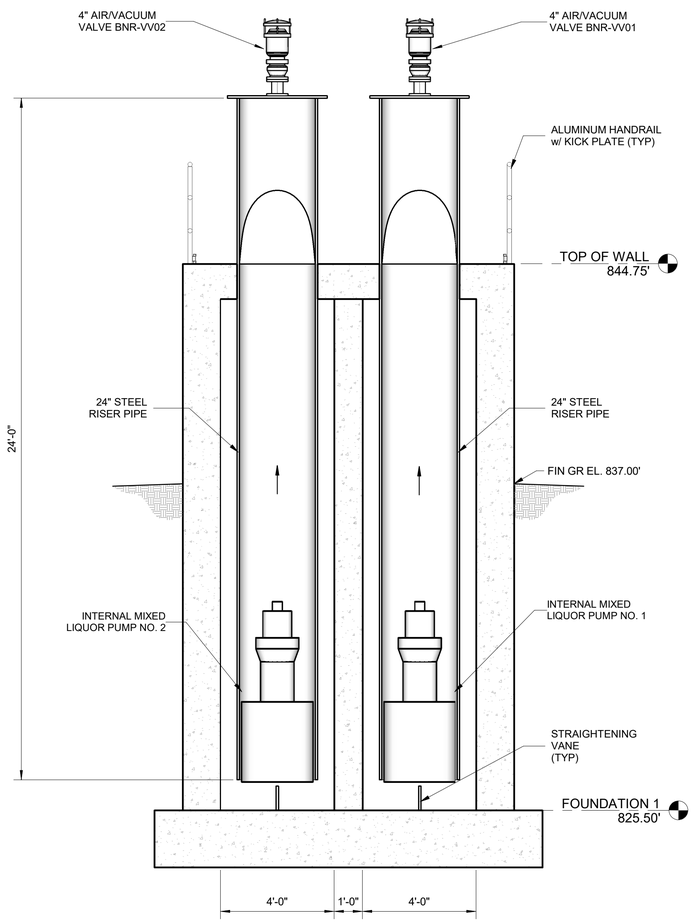

SECTION B 7C12

0 2 4 6 FT 3/8"=1'-0"

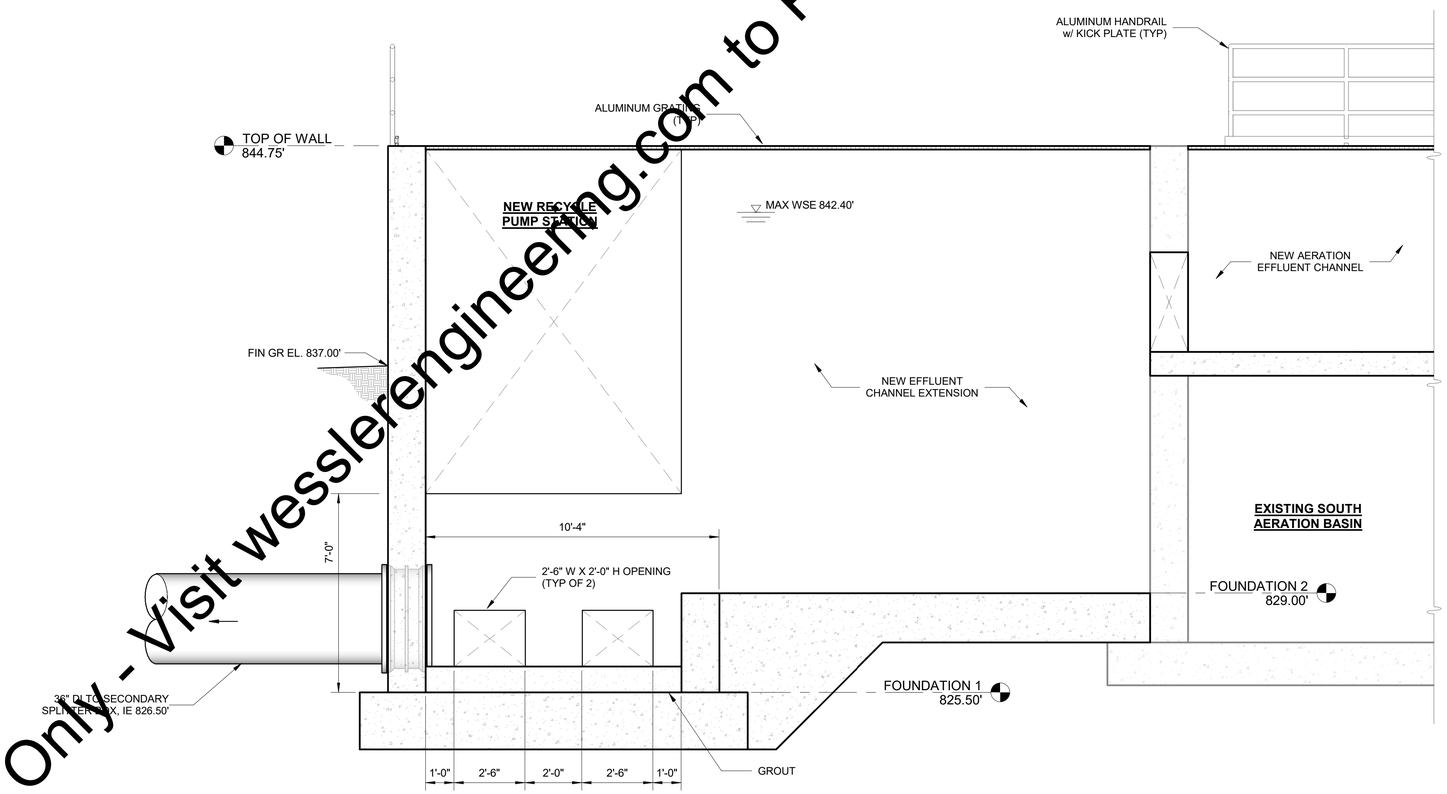

SECTION C 7C12

0 2 4 6 FT 3/8"=1'-0"

"For Viewing Purposes Only - Visit wesslerengineering.com to Purchase"

SCALE VERIFICATION	DRAWN BY	JALN
BAR IS ONE INCH LONG ON ORIGINAL DRAWING	CHECKED BY	BRP
	APPROVED BY	RWH
	ISSUE DATE	MARCH 2020
	PROJECT NUMBER	193216-04-001

NO.	DATE	INITIALS	REVISION DESCRIPTION

ROBERT W. HOLDEN, II REGISTERED No. 10000096 STATE OF INDIANA PROFESSIONAL ENGINEER 3/4/2020

WESSLER ENGINEERING

More than a Project™

WASTEWATER SYSTEM EXPANSION

CITY OF FRANKFORT, INDIANA

CONTRACT A - WASTEWATER TREATMENT PLANT

NEW RECYCLE PUMP STATION SECTIONS

SHEET NO. **7C14**

PAGE NO. 76

Plotted: 2/26/2020 9:51:06 AM C:\Users\JonathanL\Documents\193216-RECYCLE PUMP STA_CENTRAL - R19_JonathanL_WE.rvt

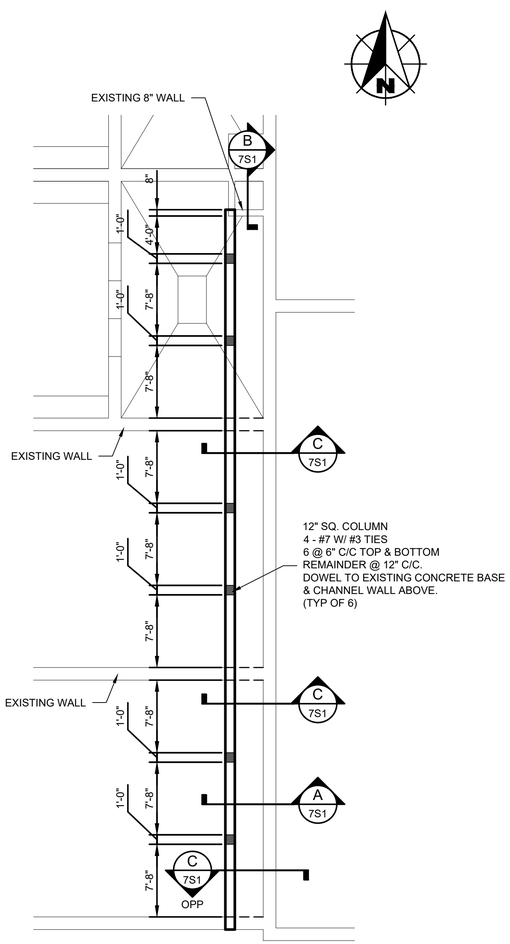

PLAN VIEW - NEW CHANNEL

SCALE: 1/8" = 1'-0"

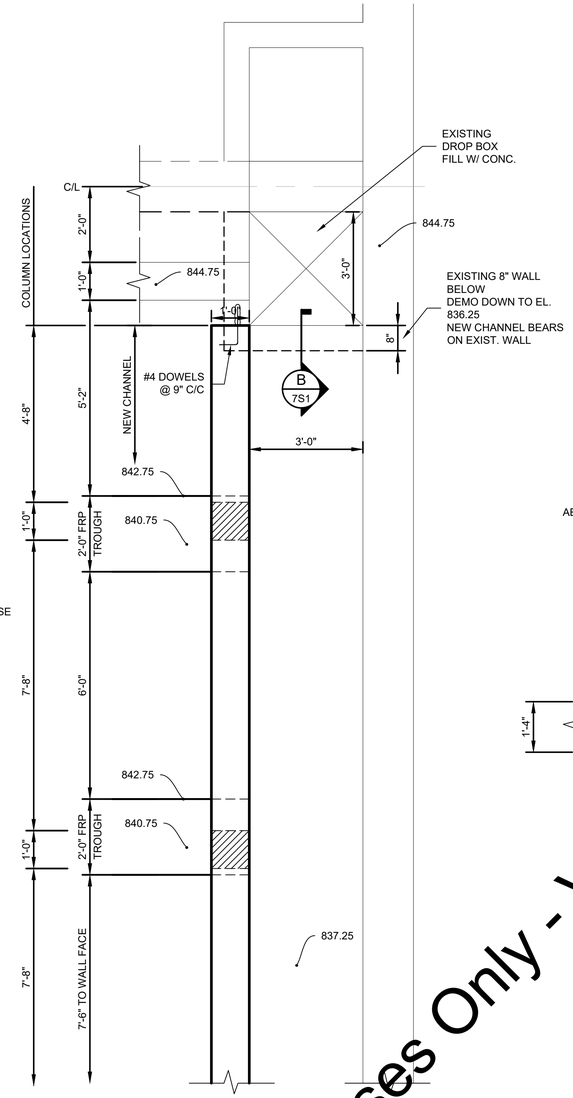

PLAN VIEW (NORTH END)

SCALE: 1/2" = 1'-0"

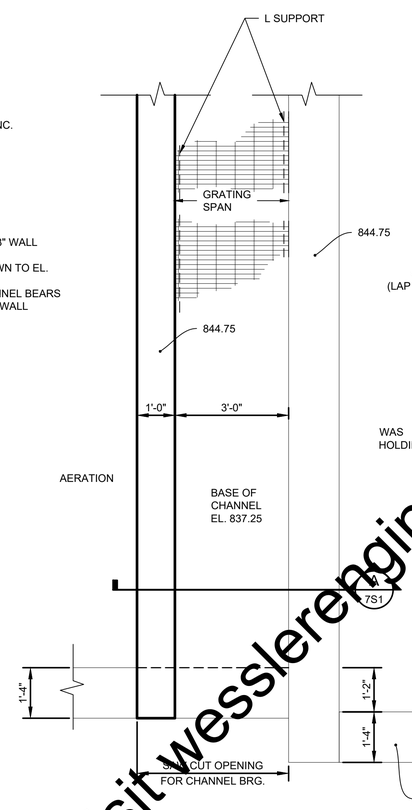

PLAN VIEW (SOUTH END)

SCALE: 1/2" = 1'-0"

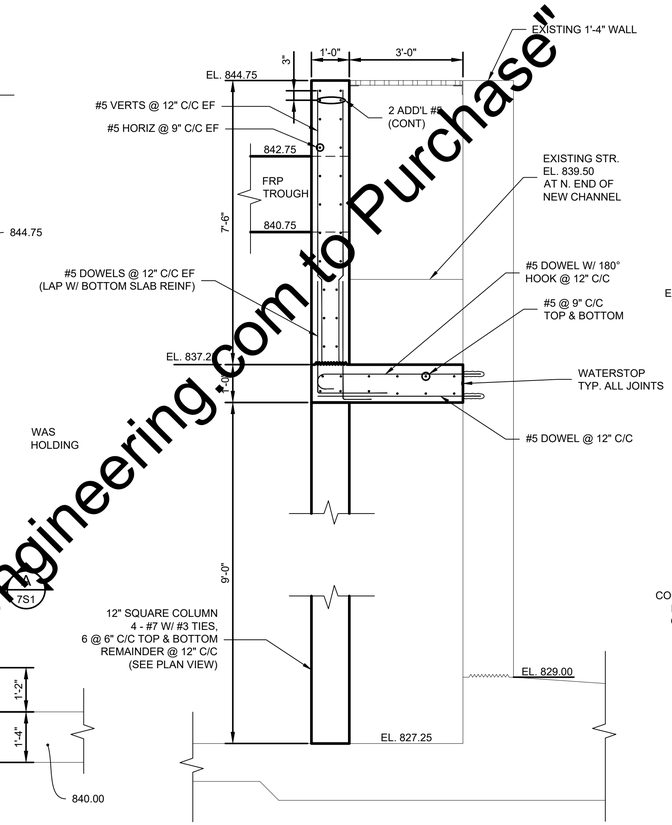

SECTION

SCALE: 1/2" = 1'-0"

A
7S1

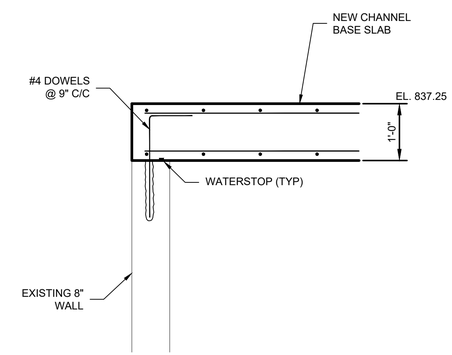

SECTION

SCALE: 1/2" = 1'-0"

B
7S1

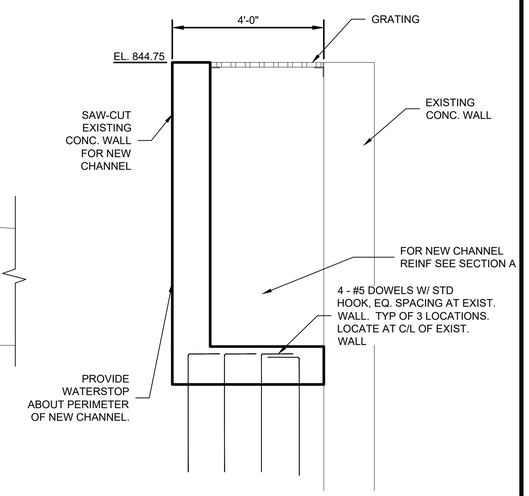

SECTION

SCALE: 1/2" = 1'-0"

C
7S1

FOR STRUCTURAL GENERAL NOTES SEE SHEET 1G10
FOR STANDARD DETAILS SEE AREA 16S SHEETS

"For Viewing Purposes Only - Visit wesslerengineering.com to Purchase"

SCALE VERIFICATION	DRAWN BY	TWS
BAR IS ONE INCH LONG ON ORIGINAL DRAWING	CHECKED BY	JRB
	APPROVED BY	JRB
	ISSUE DATE	MARCH 2020
	PROJECT NUMBER	193216-04-001

NO.	DATE	INITIALS	REVISION DESCRIPTIONS

JEFFREY ROSS BALLARD REGISTERED No. 60860191 STATE OF INDIANA PROFESSIONAL ENGINEER 03/04/2020

WESSLER ENGINEERING
More than a Project™

WASTEWATER SYSTEM EXPANSION

CITY OF FRANKFORT, INDIANA
CONTRACT A - WASTEWATER TREATMENT PLANT

BNR COMPLEX - STRUCTURAL DETAILS

SHEET NO. **7S1**

PAGE NO. 77

Drawing: J:\Frankfort\Projects\193216 Frankfort WWTP Exp\CAD 04-001\DWG\Sheets\Area 7 - EX-BNR\7S BNR-CHANNEL.dwg | Layout: 01 | Plotted: 02/28/20 @ 11:01:20 | LastSavedBy: JasonW

FOR STRUCTURAL GENERAL NOTES SEE SHEET 1G10
FOR STANDARD DETAILS SEE AREA 16S SHEETS

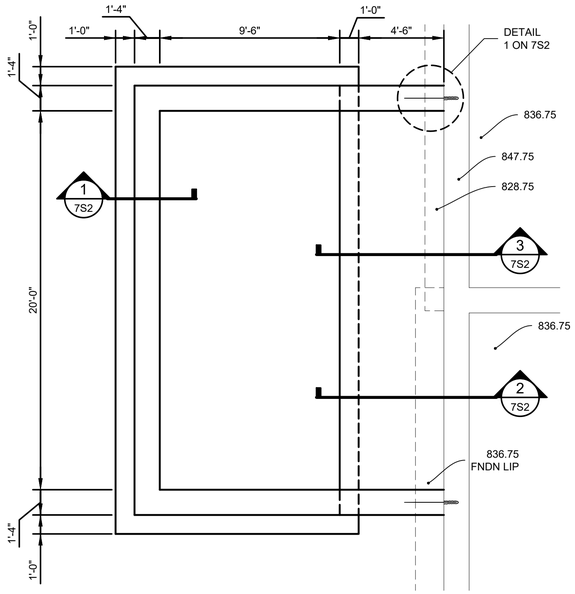

FOUNDATION PLAN - NEW INFLUENT SPLITTER BOX

SCALE: 1/4" = 1'-0"

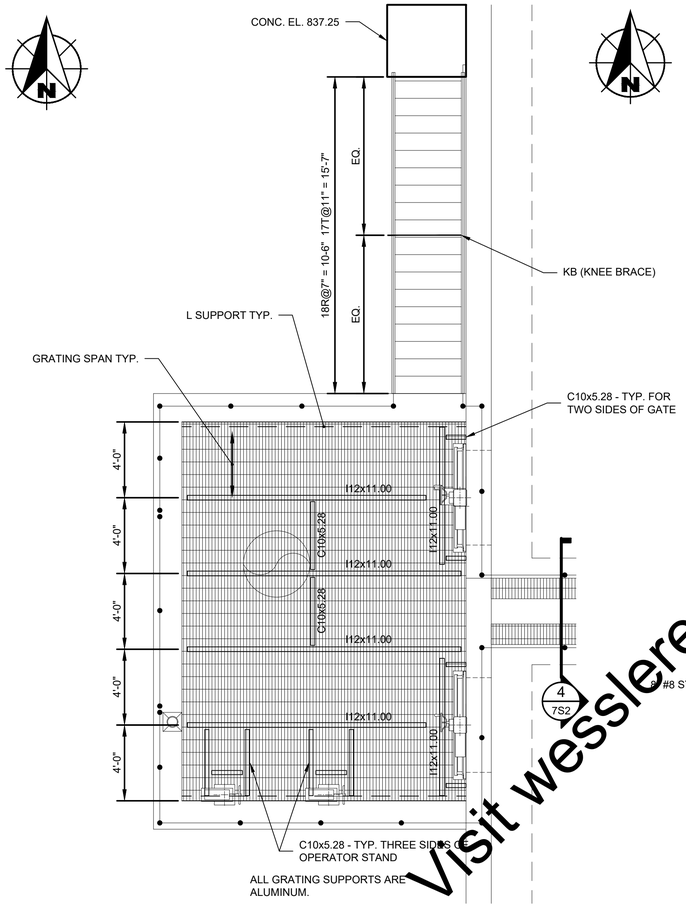

NEW INFLUENT SPLITTER BOX - FRAMING PLAN

SCALE: 1/4" = 1'-0"

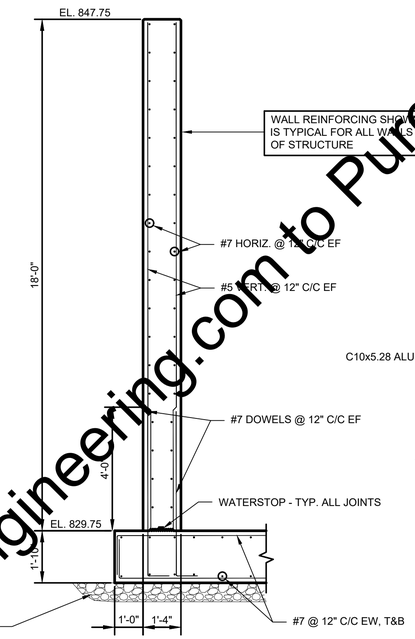

SECTION

SCALE: 3/8" = 1'-0"

1
7S2

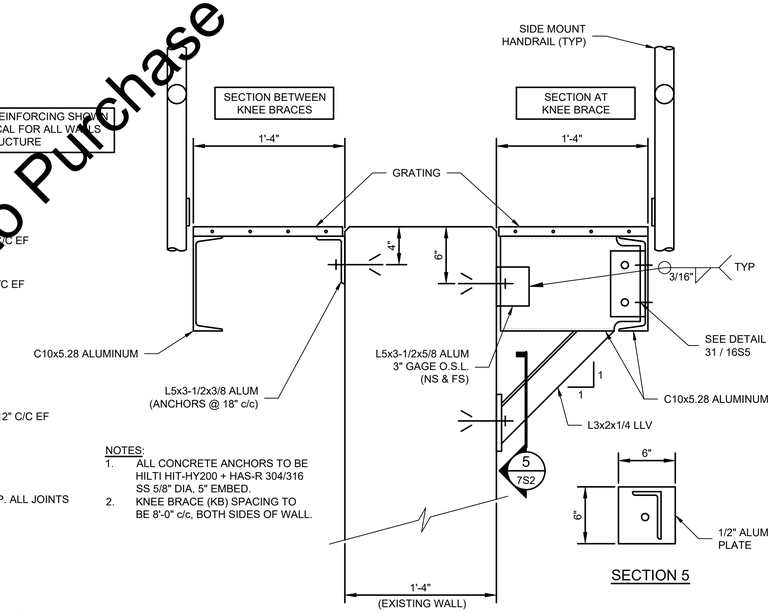

NOTES:

1. ALL CONCRETE ANCHORS TO BE HILTI HIT-HY200 + HAS-R 304/316 SS 5/8" DIA, 5" EMBED.
2. KNEE BRACE (KB) SPACING TO BE 8'-0" c/c, BOTH SIDES OF WALL.

SECTION 5

SECTION

SCALE: 3/8" = 1'-0"

4
7S2

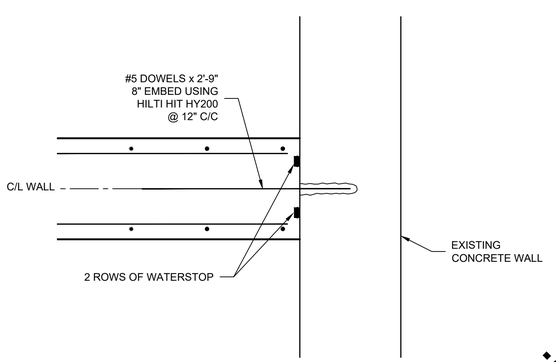

DETAIL

1" = 1'-0"

1
7S2

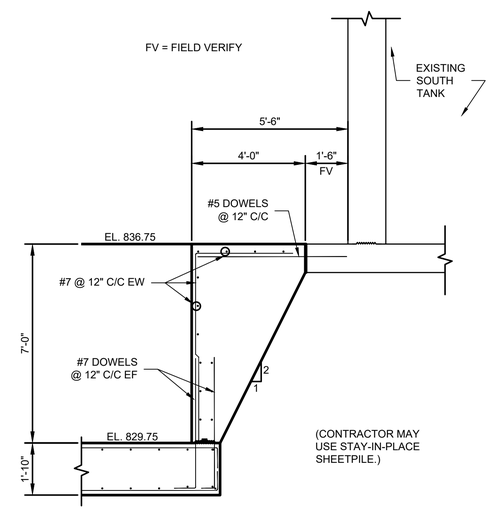

SECTION

SCALE: 3/8" = 1'-0"

2
7S2

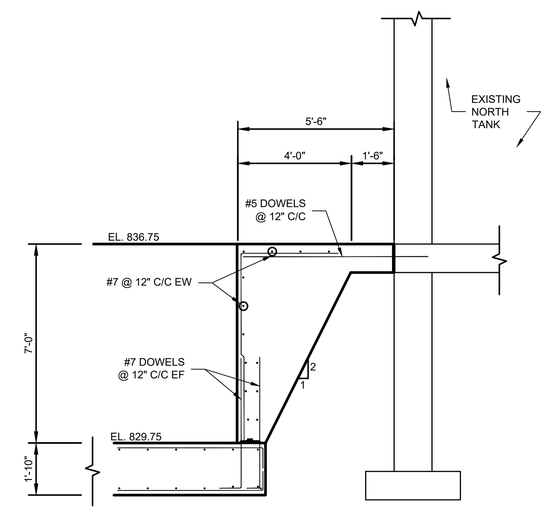

SECTION

SCALE: 3/8" = 1'-0"

3
7S2

SCALE VERIFICATION	DRAWN BY	TWC
BAR IS ONE INCH LONG ON ORIGINAL DRAWING	CHECKED BY	JRB
	APPROVED BY	JRB
	ISSUE DATE	MARCH 2020
	PROJECT NUMBER	193216-04-001

NO.	DATE	INITIALS	REVISION DESCRIPTIONS

JEFFREY ROSS BALLARD REGISTERED No. 60860191 STATE OF INDIANA PROFESSIONAL ENGINEER 03/04/2020

WESSLER ENGINEERING
More than a Project™

WASTEWATER SYSTEM EXPANSION

CITY OF FRANKFORT, INDIANA
CONTRACT A - WASTEWATER TREATMENT PLANT

NEW INFLUENT SPLITTER BOX - STRUCTURAL

SHEET NO.
7S2

PAGE NO.
78

"For Viewing Purposes Only - Visit wesslerengineering.com to Purchase"

Drawing: J:\Frankfort\Projects\193216 Frankfort WWTP Exp\CAD 04-001\DWG\Sheets\Area 7 - EX-BNR\7S BNR-CHANNEL.dwg | Layout: 02 | Plotted: 03/04/20 @ 09:27:55 | LastSavedBy: MikeN

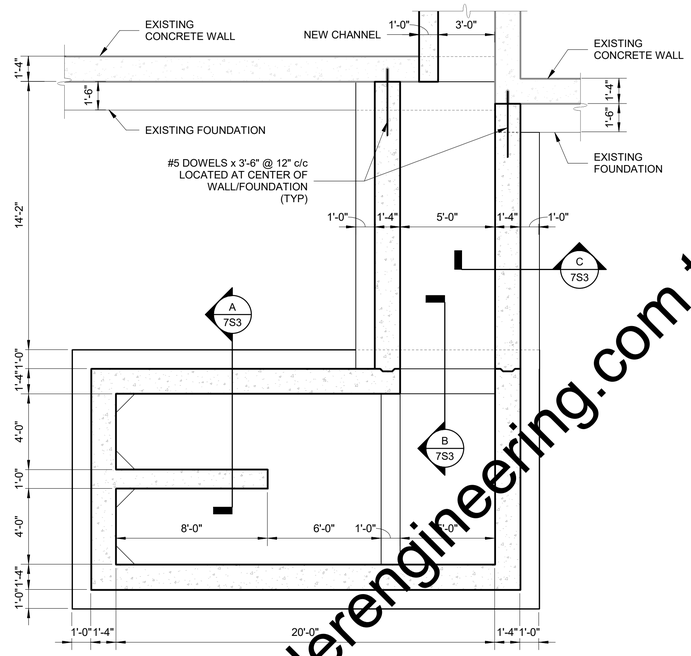

FOUNDATION PLAN

0 2 8 FT 1/4"=1'-0"

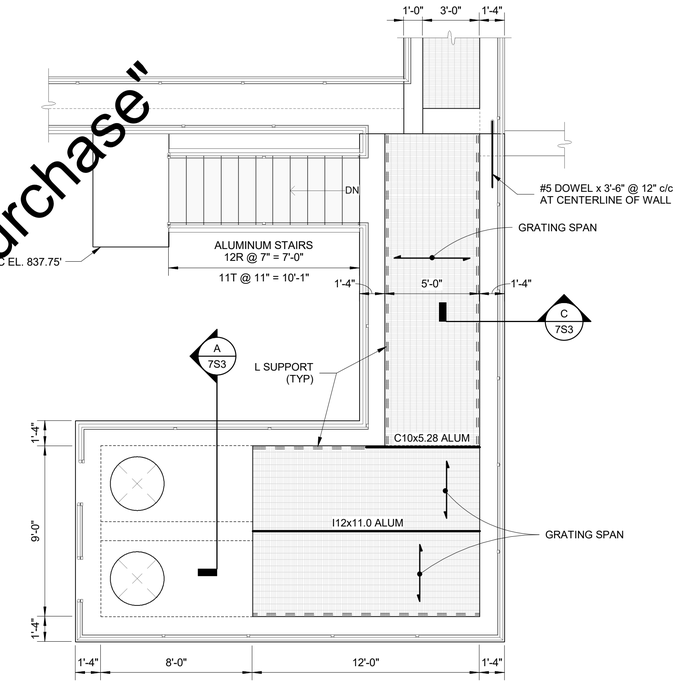

UPPER LEVEL PLAN

0 2 4 8 FT 1/4"=1'-0"

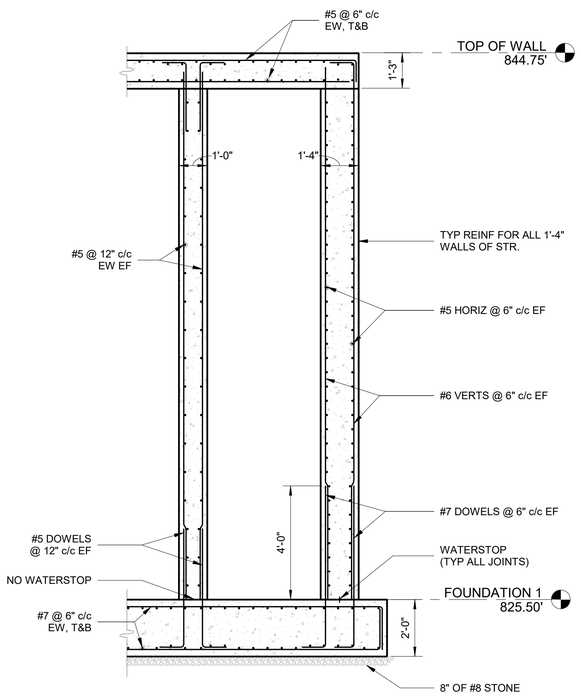

SECTION A 7S3

0 2 4 6 FT 3/8"=1'-0"

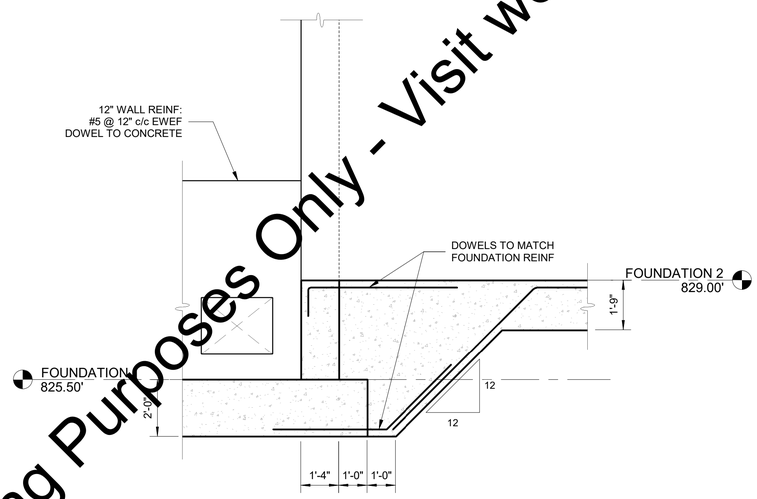

SECTION B 7S3

0 2 4 6 FT 3/8"=1'-0"

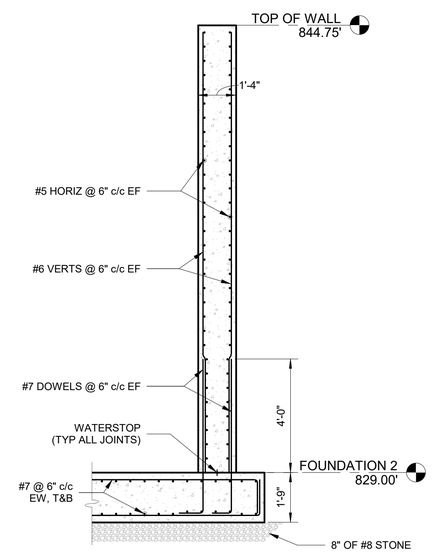

SECTION C 7S3

0 2 4 6 FT 3/8"=1'-0"

FOR STRUCTURAL GENERAL NOTES SEE 1S1.
FOR STANDARD DETAILS SEE AREA 16S SHEETS.

SCALE VERIFICATION	DRAWN BY	JL
BAR IS ONE INCH LONG ON ORIGINAL DRAWING	CHECKED BY	JRB
	APPROVED BY	JRB
	ISSUE DATE	MARCH 2020
	PROJECT NUMBER	193216-04-001

NO.	DATE	INITIALS	REVISION DESCRIPTION

JEFFREY ROSS BALLARD REGISTERED No. 60860191 STATE OF INDIANA PROFESSIONAL ENGINEER 3/4/2020

WESSLER ENGINEERING
More than a Project™

WASTEWATER SYSTEM EXPANSION
CITY OF FRANKFORT, INDIANA
CONTRACT A - WASTEWATER TREATMENT PLANT

NEW RECYCLE PUMP STATION
PLANS & SECTIONS

SHEET NO. **7S3**
PAGE NO. 79

"For Viewing Purposes Only - Visit wesslerengineering.com to Purchase"

Plotted: 2/26/2020 9:51:09 AM C:\users\JonathanL\Documents\193216-RECYCLE PUMP STA_CENTRAL - R19_JonathanL_WE.rvt

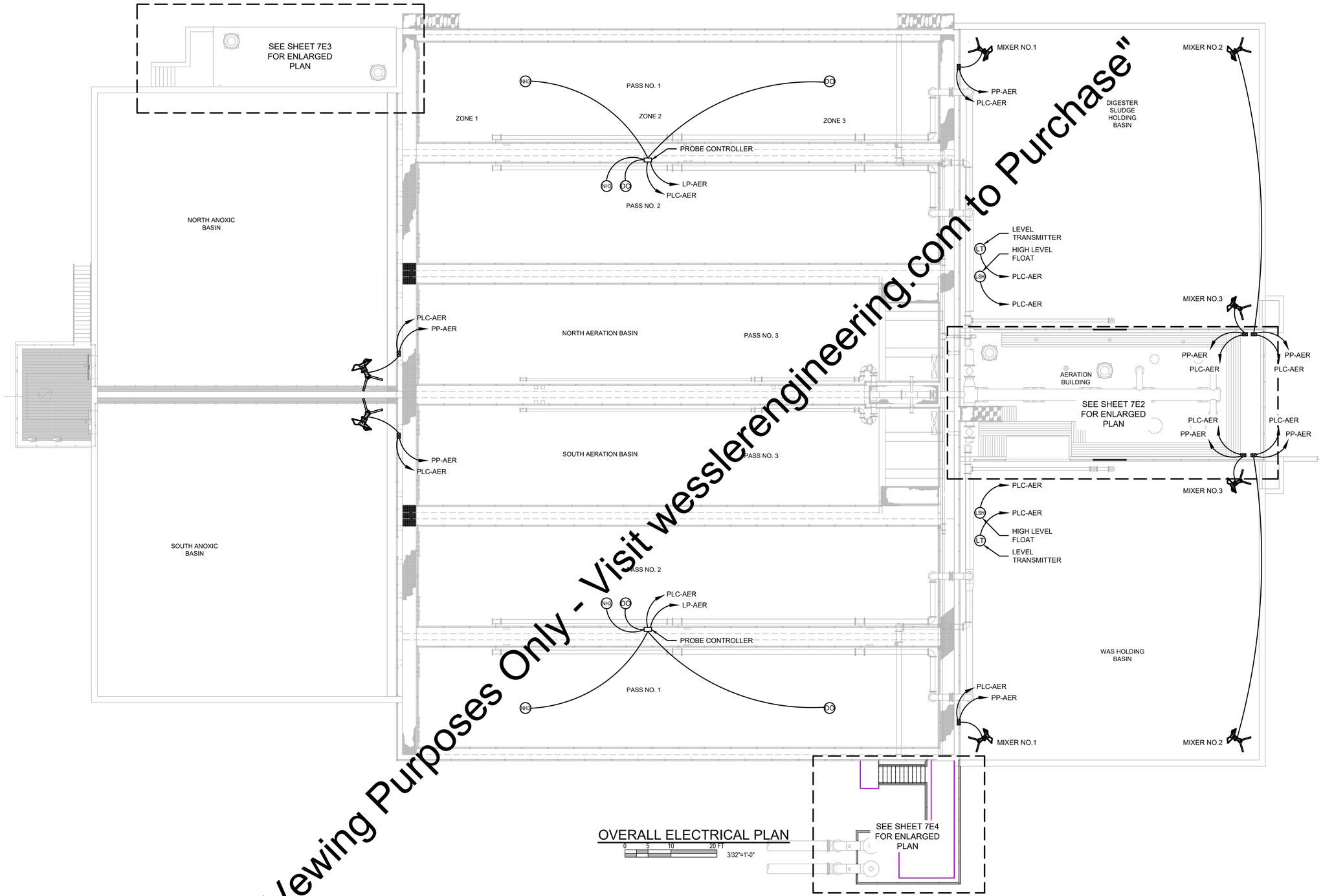

OVERALL ELECTRICAL PLAN

0 5 10 20 FT
3/32"=1'-0"

"For Viewing Purposes Only - Visit wesslerengineering.com to Purchase"

SCALE VERIFICATION	DRAWN BY	EAS
BAR IS ONE INCH LONG ON ORIGINAL DRAWING	CHECKED BY	WCM
	APPROVED BY	WCM
	ISSUE DATE	MARCH 2020
	PROJECT NUMBER	193216-04-001

NO.	DATE	INITIALS	REVISION DESCRIPTIONS

WAYNE C. MOORE REGISTERED No. 10707476 STATE OF INDIANA PROFESSIONAL ENGINEER 03/04/2020

WESSLER ENGINEERING
More than a Project™

WASTEWATER SYSTEM EXPANSION

CITY OF FRANKFORT, INDIANA
CONTRACT A - WASTEWATER TREATMENT PLANT

BNR COMPLEX - OVERALL ELECTRICAL PLAN

SHEET NO.
7E1

PAGE NO.
80

Drawing: J:\Frankfort\Projects\193216 Frankfort WWTP Exp\CAD 04-001\DWG\Sheets\Area 7 - EX-BNR\7E BNR-MOD-EL.dwg | Layout: 7E1 | Plotted: 03/05/20 @ 09:56:46 | LastSavedBy: MikeN

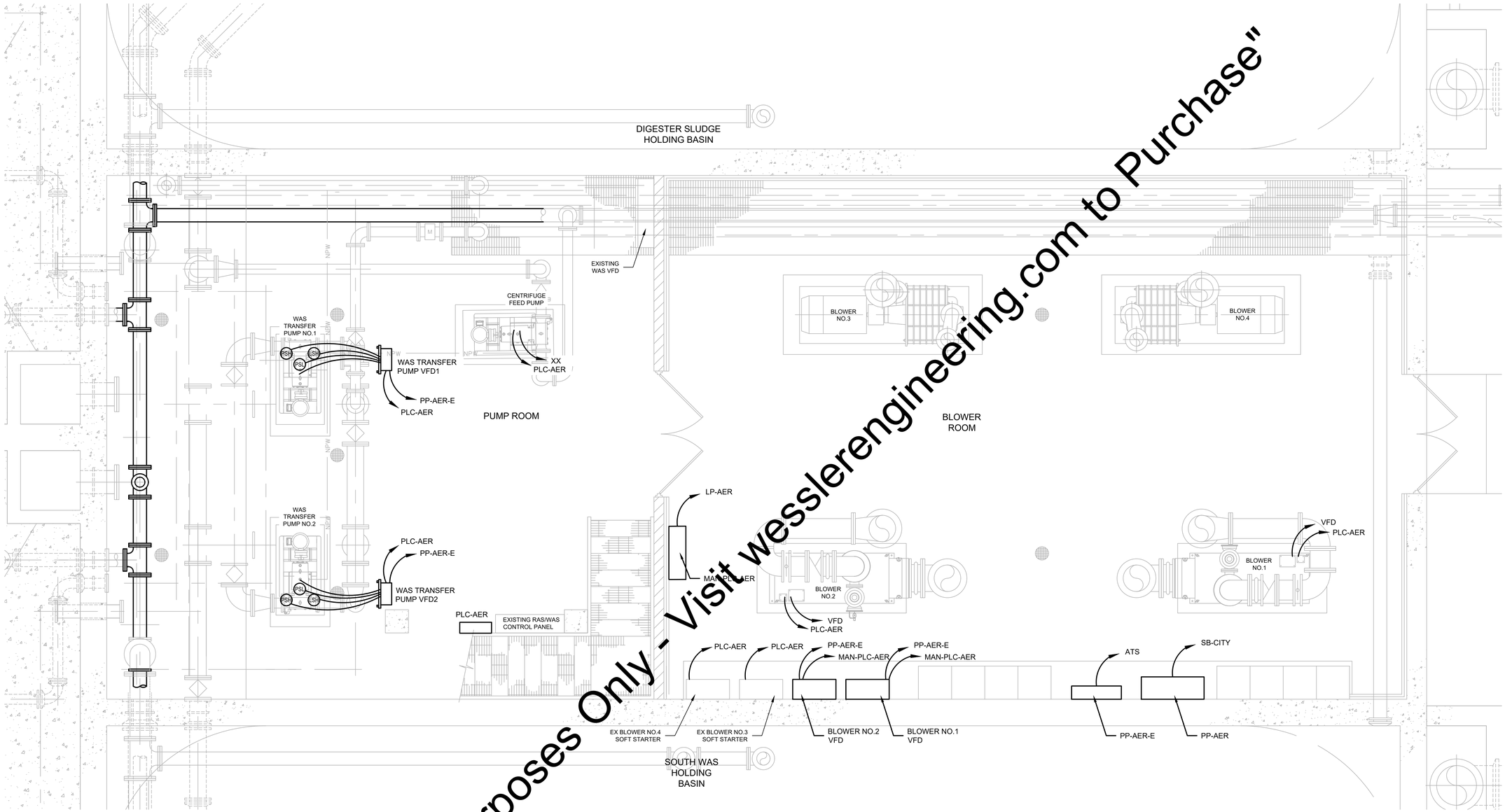

BLOWER\PUMP ROOM ELECTRICAL MODIFICATION PLAN

0 2 4 6 FT
3/8"=1'-0"

"For Viewing Purposes Only - Visit wesslerengineering.com to Purchase"

SCALE VERIFICATION	DRAWN BY	EAG
BAR IS ONE INCH LONG ON ORIGINAL DRAWING	CHECKED BY	WCM
	APPROVED BY	WCM
	ISSUE DATE	MARCH 2020
	PROJECT NUMBER	193216-04-001

NO.	DATE	INITIALS	REVISION DESCRIPTIONS

WAYNE C. MOORE REGISTERED No. 10707476 STATE OF INDIANA PROFESSIONAL ENGINEER 03/04/2020

WESSLER ENGINEERING
More than a Project™

WASTEWATER SYSTEM EXPANSION
CITY OF FRANKFORT, INDIANA
CONTRACT A - WASTEWATER TREATMENT PLANT

AERATION BUILDING - ELECTRICAL PLAN

SHEET NO. **7E2**

PAGE NO. 81

Drawing: J:\Frankfort\Projects\193216 Frankfort WWTP Exp\CAD 04-001\DWG\Sheets\Area 7 - EX-BNR\7E BNR-MOD-EL.dwg | Layout: 7E2 | Plotted: 03/05/20 @ 09:57:05 | LastSavedBy: MikeN

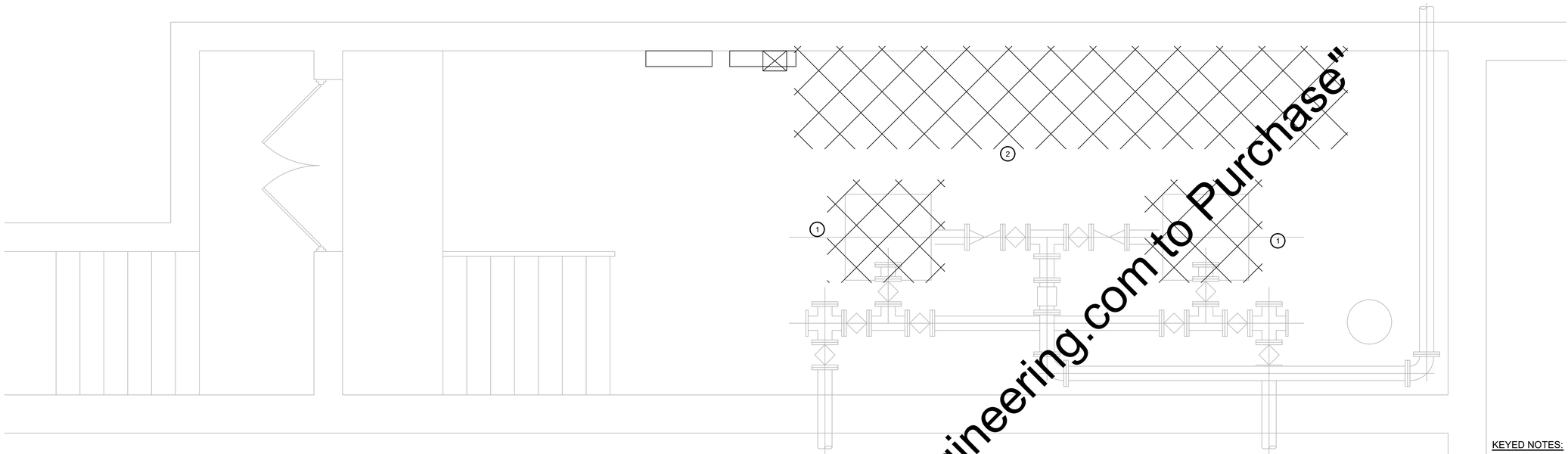

PRIMARY SLUDGE PUMP ROOM ELECTRICAL DEMOLITION PLAN

0 1 2 4 FT
1/2"=1'-0"

KEYED NOTES:

1. REMOVE MOTOR AND ALL WIRING AND CONDUIT BACK TO SOURCE.
2. REMOVE OR RELOCATE ALL EXISTING EQUIPMENT ON THIS WALL. EXCEPT EXISTING POWER/LIGHTING PANELS.
3. HOUSEKEEPING PAD FOR TRANSFORMER.
4. CONNECT PUMPS AND CONTROLS PER MANUFACTURER REQUIREMENTS.

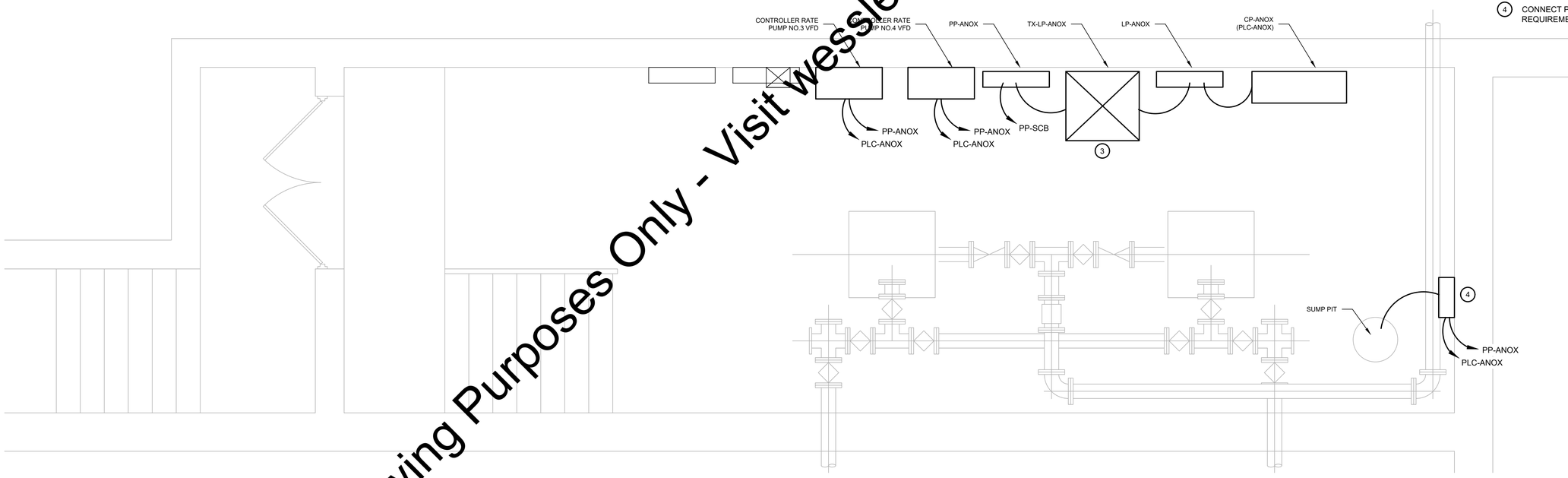

PRIMARY SLUDGE PUMP ROOM ELECTRICAL MODIFICATION PLAN

0 1 2 4 FT
1/2"=1'-0"

"For Vewing Purposes Only - Visit wesslerengineering.com to Purchase"

SCALE VERIFICATION	DRAWN BY	EAS
BAR IS ONE INCH LONG ON ORIGINAL DRAWING	CHECKED BY	WCM
	APPROVED BY	WCM
	ISSUE DATE	MARCH 2020
	PROJECT NUMBER	193216-04-001

NO.	DATE	INITIALS	REVISION DESCRIPTIONS

WAYNE C. MOORE REGISTERED No. 10707476 STATE OF INDIANA PROFESSIONAL ENGINEER 03/04/2020

WESSLER ENGINEERING
More than a Project™

WASTEWATER SYSTEM EXPANSION

CITY OF FRANKFORT, INDIANA
CONTRACT A - WASTEWATER TREATMENT PLANT

PRIMARY SLUDGE PUMP ROOM - ELECTRICAL PLAN

SHEET NO.
7E3

PAGE NO.
82

Drawing: J:\Frankfort\Projects\193216 Frankfort WWTP Exp\CAD 04-001\DWG\Sheets\Area 7 - EX-BNR\7E BNR-MOD-EL.dwg | Layout: 7E3 | Plotted: 03/05/20 @ 09:57:49 | LastSavedBy: MikeN

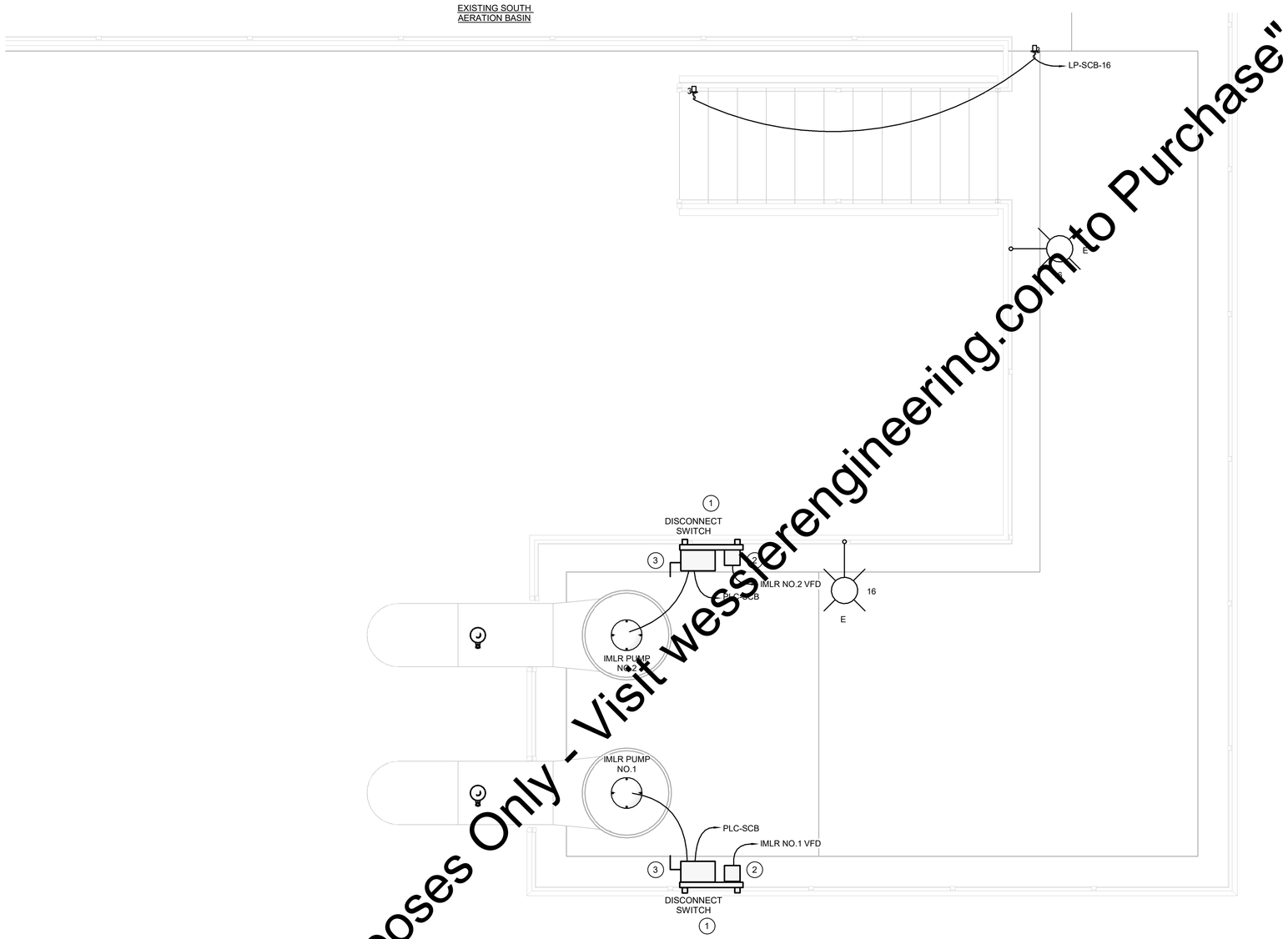

POWER PLAN

0 1 2 4 FT
1/2"=1'-0"

KEYED NOTES

1 PROVIDE UNISTRUT AS REQURED TO INSTALL DISCONNECT.
2 H-O-A SWITCH IN A NEMA 4X, SST ENCLOSURE.
3 100A, 480V, 3-POLE, NEMA 4X, SST, NFSS.

"For Vewing Purposes Only - Visit wesslerengineering.com to Purchase"

SCALE VERIFICATION	DRAWN BY	EAS
BAR IS ONE INCH LONG ON ORIGINAL DRAWING	CHECKED BY	WCM
	APPROVED BY	WCM
	ISSUE DATE	MARCH 2020
	PROJECT NUMBER	193216-04-001

NO.	DATE	INITIALS	REVISION DESCRIPTION

WAYNE C. MOORE REGISTERED No. 10707476 STATE OF INDIANA PROFESSIONAL ENGINEER 3/4/2020

WESSLER ENGINEERING
More than a Project™

WASTEWATER SYSTEM EXPANSION
FRANKFORT UTILITIES
FRANKFORT, INDIANA

NEW RECYCLE PUMP STATION - POWER PLAN

SHEET NO. **7E4**
PAGE NO. 83

Plotted: 3/4/2020 11:39:44 AM J:\Frankfort\Projects\193216 Frankfort WWTP Exp\CAD 04-001\Revit\Models\193216-EL-RECYCLE PUMP STA - R19.rvt

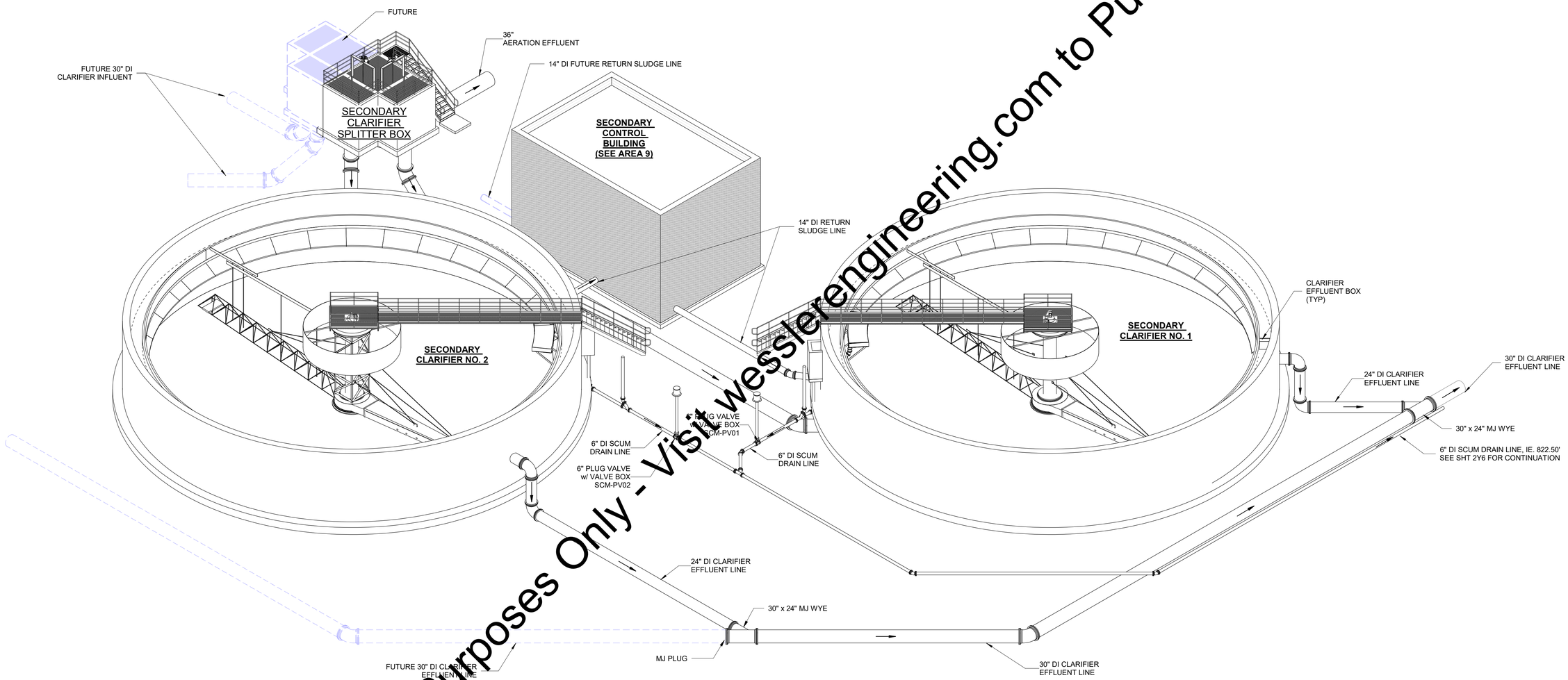

PERSPECTIVE VIEW

SCALE: NONE

"For Viewing Purposes Only - Visit wesslerengineering.com to Purchase"

SCALE VERIFICATION	DRAWN BY	HLN
BAR IS ONE INCH LONG ON ORIGINAL DRAWING	CHECKED BY	BRP
	APPROVED BY	RWH
	ISSUE DATE	MARCH 2020
	PROJECT NUMBER	193216-04-001

NO.	DATE	INITIALS	REVISION DESCRIPTION

ROBERT W. HOLDEN, II
REGISTERED
No. 10000096
STATE OF INDIANA
PROFESSIONAL ENGINEER
3/4/2020

WESSLER ENGINEERING
More than a Project™

WASTEWATER SYSTEM EXPANSION

CITY OF FRANKFORT, INDIANA

CONTRACT A - WASTEWATER TREATMENT PLANT

NEW SECONDARY CLARIFIER COMPLEX

PERSPECTIVE VIEW

SHEET NO. **8G1**

PAGE NO. 84

Plotted: 2/26/2020 4:18:06 PM C:\users\Jonathan\Documents\193216-New Secondary Clarifiers_CENTRAL - R19_JonathanL_WE.rvt

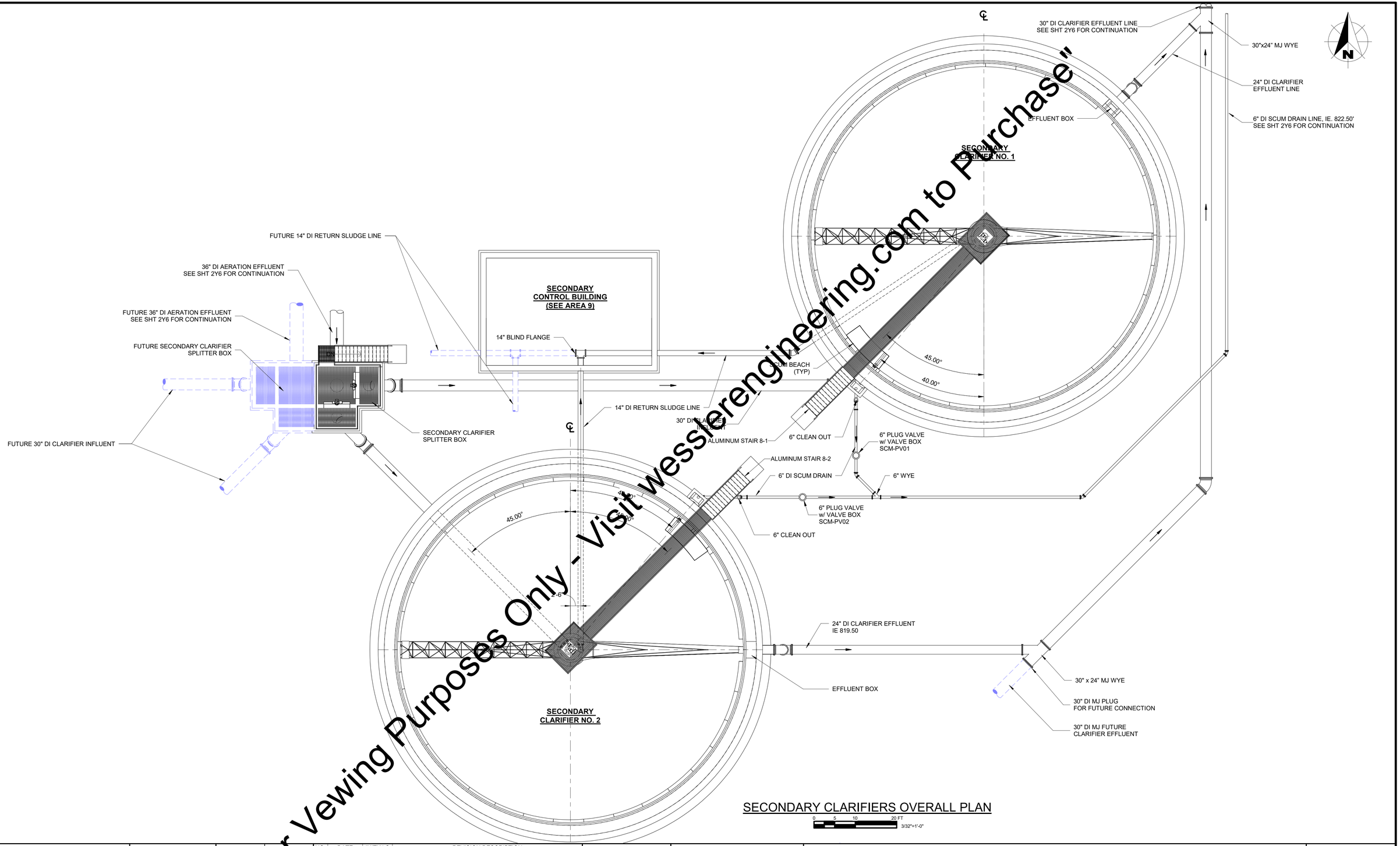

SECONDARY CLARIFIERS OVERALL PLAN

0 5 10 20 FT
3/32"=1'-0"

For Vewing Purposes Only - Visit wesslerengineering.com to Purchase"

SCALE VERIFICATION	DRAWN BY	MLN
BAR IS ONE INCH LONG ON ORIGINAL DRAWING	CHECKED BY	BRP
	APPROVED BY	RWH
	ISSUE DATE	MARCH 2020
	PROJECT NUMBER	193216-04-001

NO.	DATE	INITIALS	REVISION DESCRIPTION

ROBERT W. HOLDEN, II
REGISTERED
No. 10000096
STATE OF INDIANA
PROFESSIONAL ENGINEER
3/4/2020

WESSLER ENGINEERING
More than a Project™

WASTEWATER SYSTEM EXPANSION
CITY OF FRANKFORT, INDIANA
CONTRACT A - WASTEWATER TREATMENT PLANT

NEW SECONDARY CLARIFIERS COMPLEX
OVERALL PLAN VIEW

SHEET NO. **8C1**

PAGE NO. 85

Plotted: 2/26/2020 4:17:45 PM C:\users\Jonathan\Documents\193216-New Secondary Clarifiers_CENTRAL - R19_Jonathan_WE.rvt

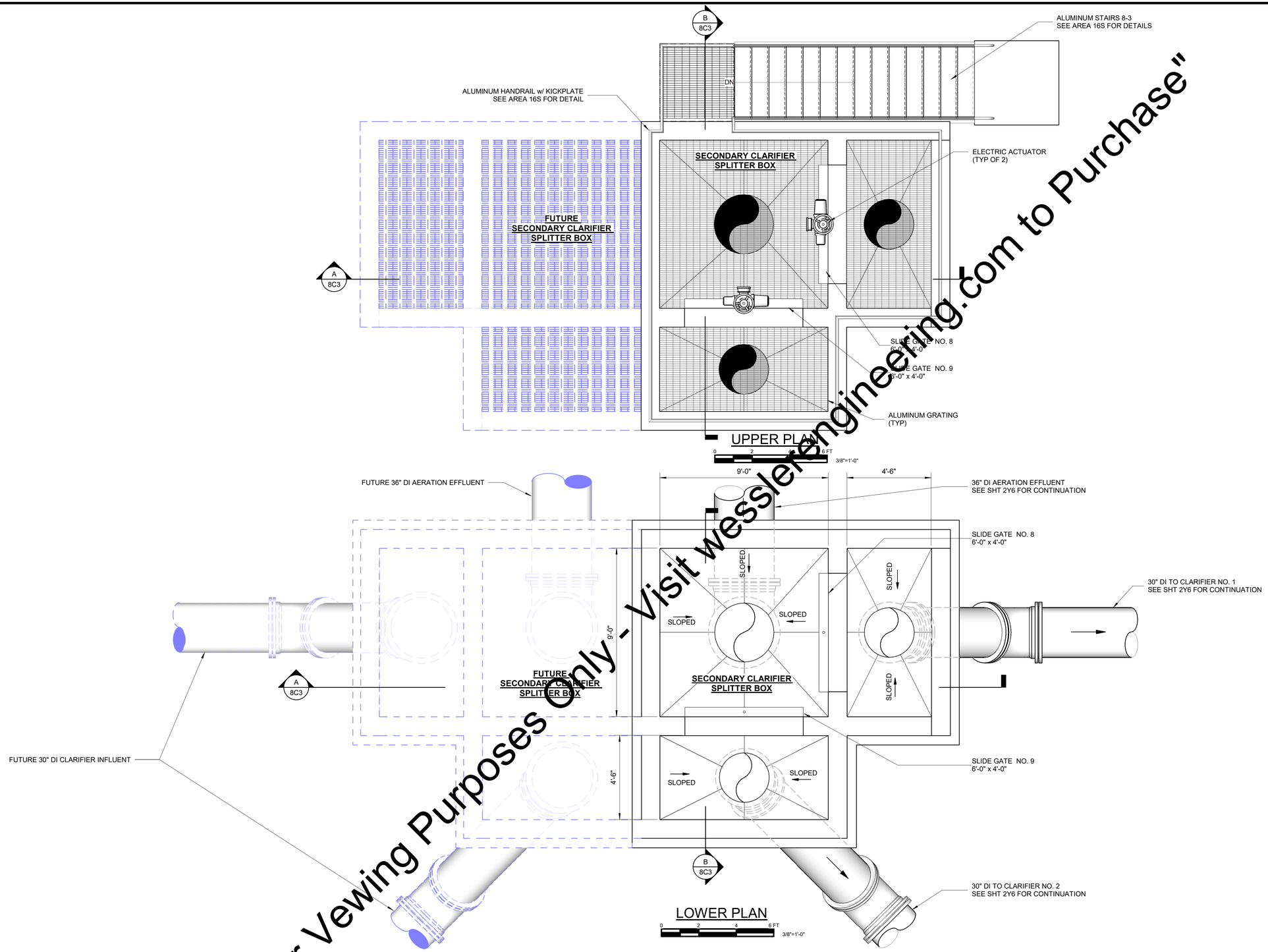

"For Vewing Purposes Only - Visit wesslerengineering.com to Purchase"

SCALE VERIFICATION	DRAWN BY	JLN
BAR IS ONE INCH LONG ON ORIGINAL DRAWING	CHECKED BY	BRP
	APPROVED BY	RWH
	ISSUE DATE	MARCH 2020
	PROJECT NUMBER	193216-04-001

NO.	DATE	INITIALS	REVISION DESCRIPTION

ROBERT W. HOLDEN II REGISTERED No. 10000096 STATE OF INDIANA PROFESSIONAL ENGINEER 3/4/2020

WESSLER ENGINEERING
More than a Project™

WASTEWATER SYSTEM EXPANSION
CITY OF FRANKFORT, INDIANA
CONTRACT A - WASTEWATER TREATMENT PLANT

NEW SECONDARY CLARIFIER SPLITTER BOX
LOWER AND UPPER PLANS

SHEET NO. **8C2**

PAGE NO. 86

Plotted: 2/26/2020 4:17:49 PM C:\users\JonathanL\Documents\193216-New Secondary Clarifiers_CENTRAL - R19_JonathanL_WE.rvt

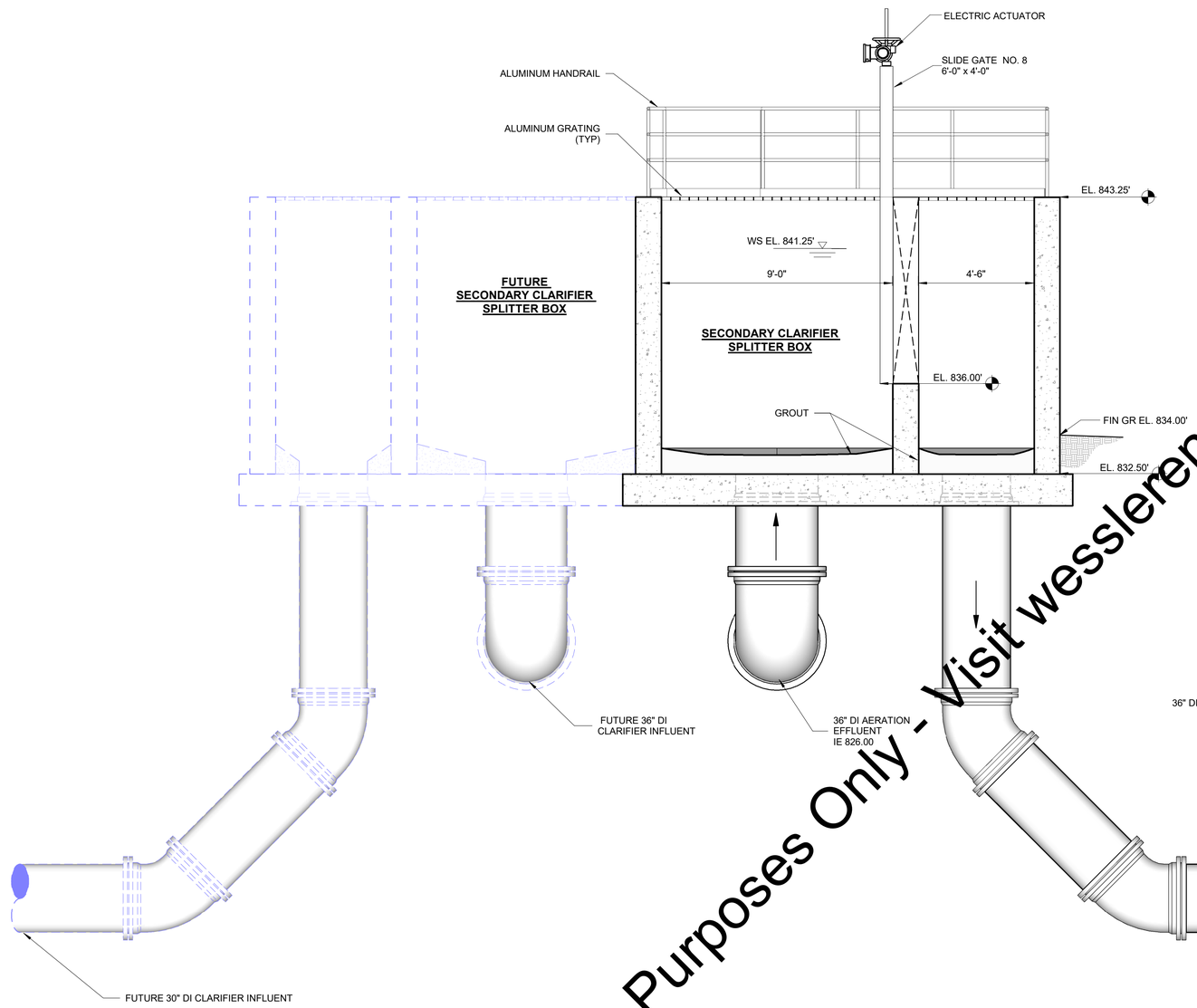

SECTION A 8C2

0 2 4 6 FT 3/8"=1'-0"

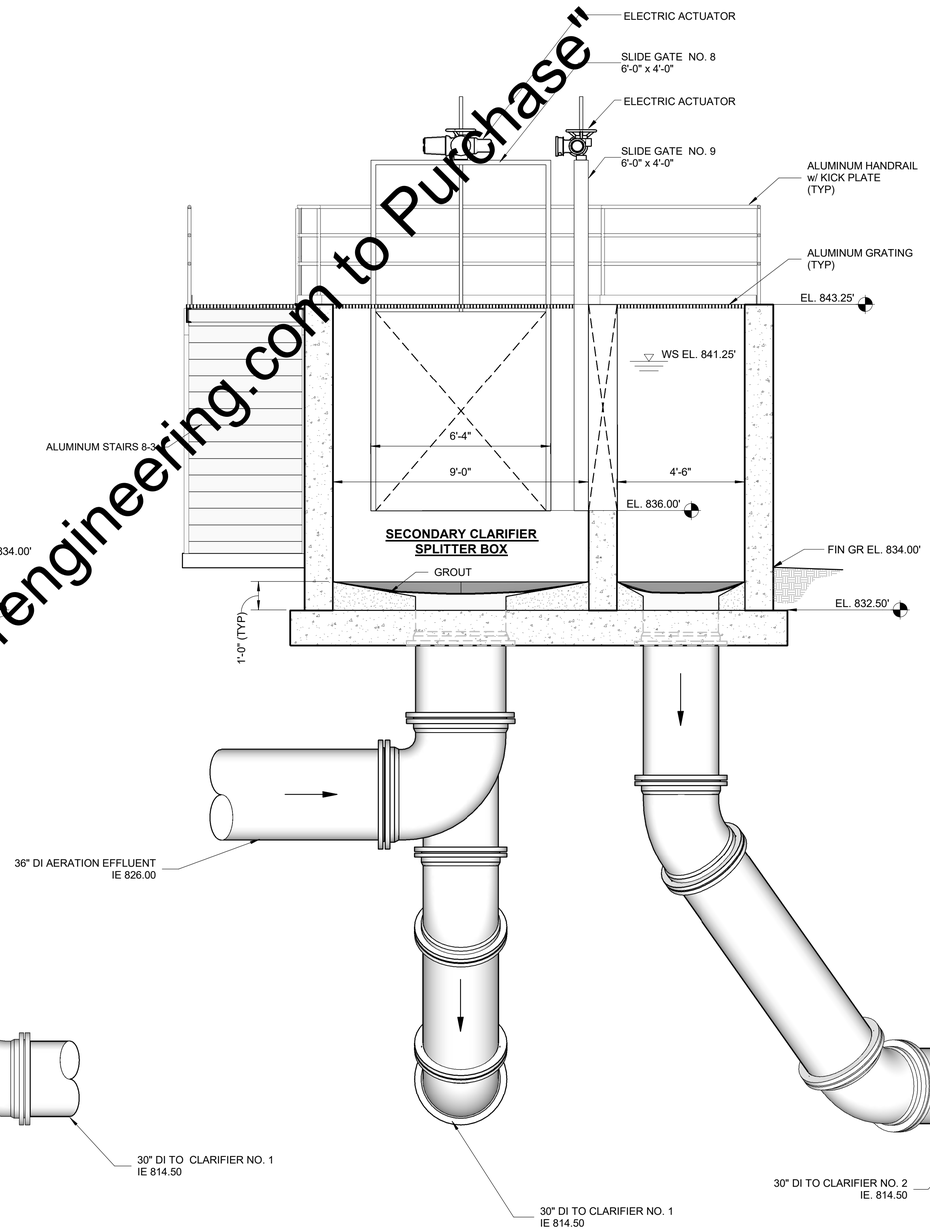

SECTION B 8C2

0 2 4 6 FT 3/8"=1'-0"

"For Viewing Purposes Only - Visit wesslerengineering.com to Purchase"

SCALE VERIFICATION	DRAWN BY	MLN
BAR IS ONE INCH LONG ON ORIGINAL DRAWING	CHECKED BY	BRP
	APPROVED BY	RWH
	ISSUE DATE	MARCH 2020
	PROJECT NUMBER	193216-04-001

NO.	DATE	INITIALS	REVISION DESCRIPTION

ROBERT W. HOLDEN, II REGISTERED No. 10000096 STATE OF INDIANA PROFESSIONAL ENGINEER 3/4/2020

WESSLER ENGINEERING
More than a Project™

WASTEWATER SYSTEM EXPANSION
CITY OF FRANKFORT, INDIANA
CONTRACT A - WASTEWATER TREATMENT PLANT

NEW SECONDARY CLARIFIER SPLITTER BOX SECTIONS

SHEET NO. **8C3**

PAGE NO. 87

Plotted: 3/4/2020 3:28:00 PM C:\users\CurtisG\Documents\193216-New Secondary Clarifiers_CENTRAL - R19_CurtisGrannan.rvt

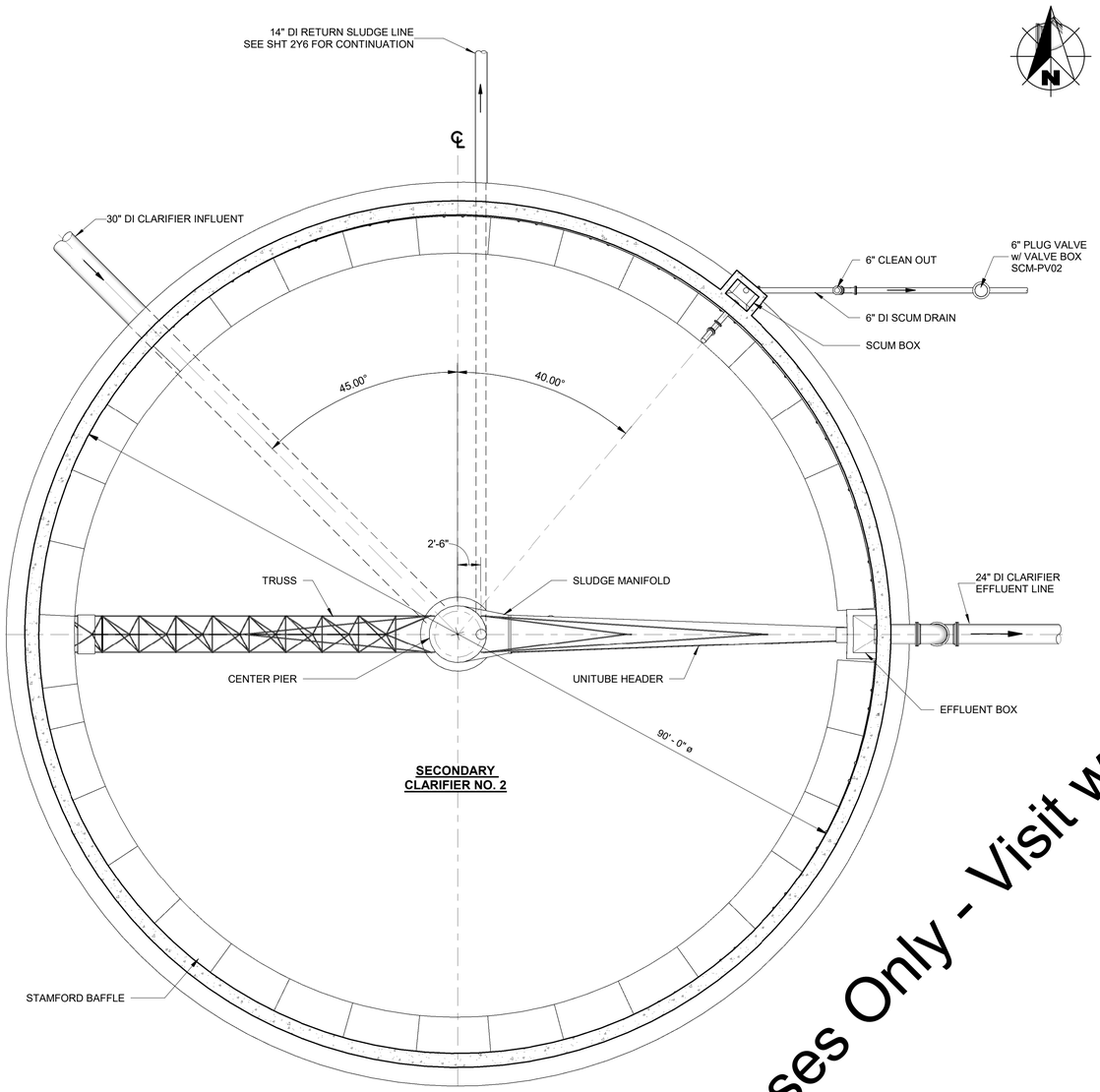

SECONDARY CLARIFIER NO. 2

0 4 8 16 FT 1/8"=1'-0"

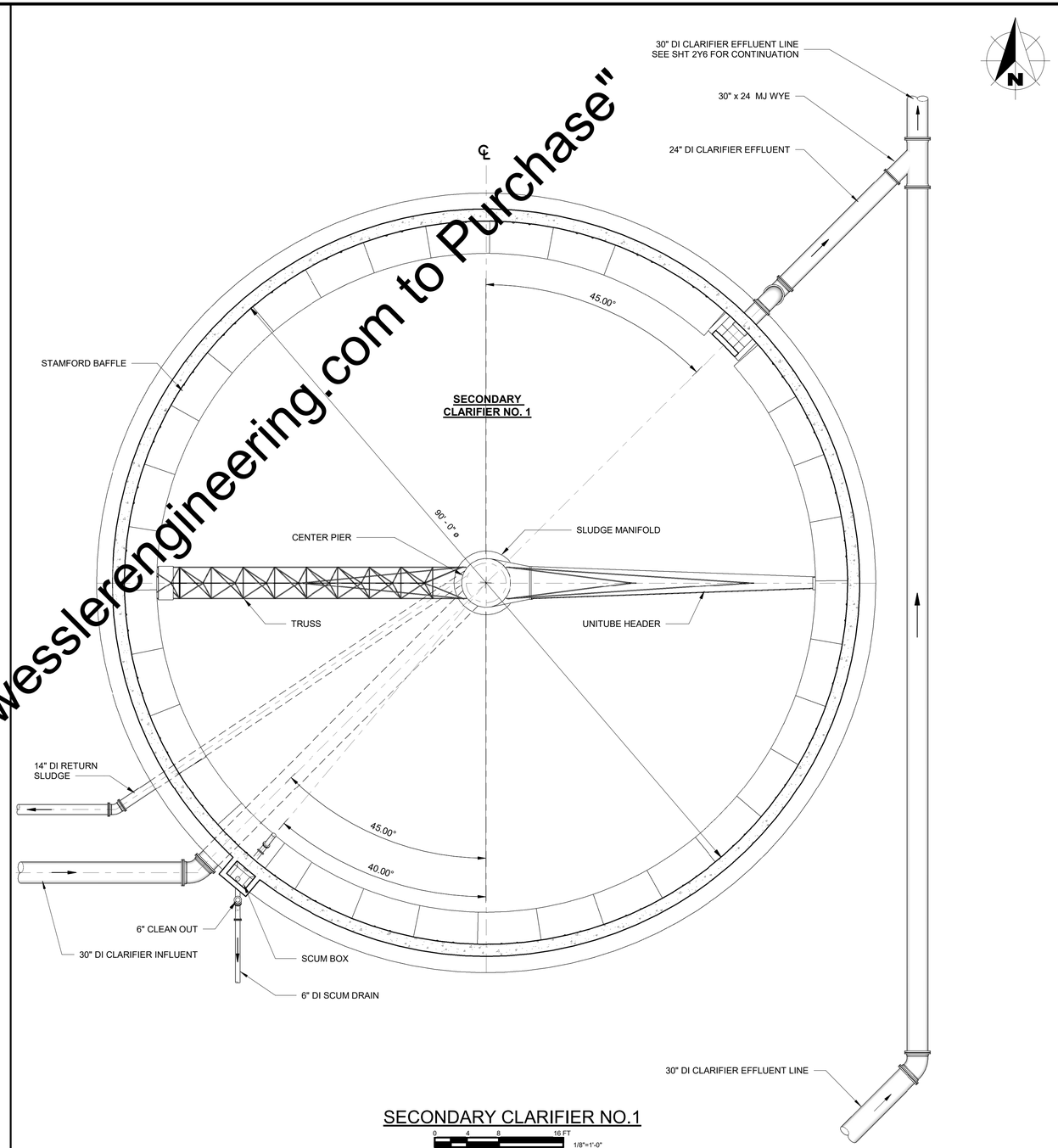

SECONDARY CLARIFIER NO.1

0 4 8 16 FT 1/8"=1'-0"

"For Viewing Purposes Only - Visit wesslerengineering.com to Purchase"

SCALE VERIFICATION	DRAWN BY	JNLN
BAR IS ONE INCH LONG ON ORIGINAL DRAWING	CHECKED BY	BRP
	APPROVED BY	RWH
	ISSUE DATE	MARCH 2020
	PROJECT NUMBER	193216-04-001

NO.	DATE	INITIALS	REVISION DESCRIPTION

ROBERT W. HOLDEN II REGISTERED No. 10000096 STATE OF INDIANA PROFESSIONAL ENGINEER 3/4/2020

WESSLER ENGINEERING
More than a Project™

WASTEWATER SYSTEM EXPANSION
CITY OF FRANKFORT, INDIANA
CONTRACT A - WASTEWATER TREATMENT PLANT

NEW SECONDARY CLARIFIERS NO. 1 AND NO. 2
LOWER PLANS

SHEET NO. **8C4**

PAGE NO. 88

Plotted: 2/26/2020 4:20:56 PM C:\users\JonathanL\Documents\193216-New Secondary Clarifiers_CENTRAL - R19_JonathanL_WE.rvt

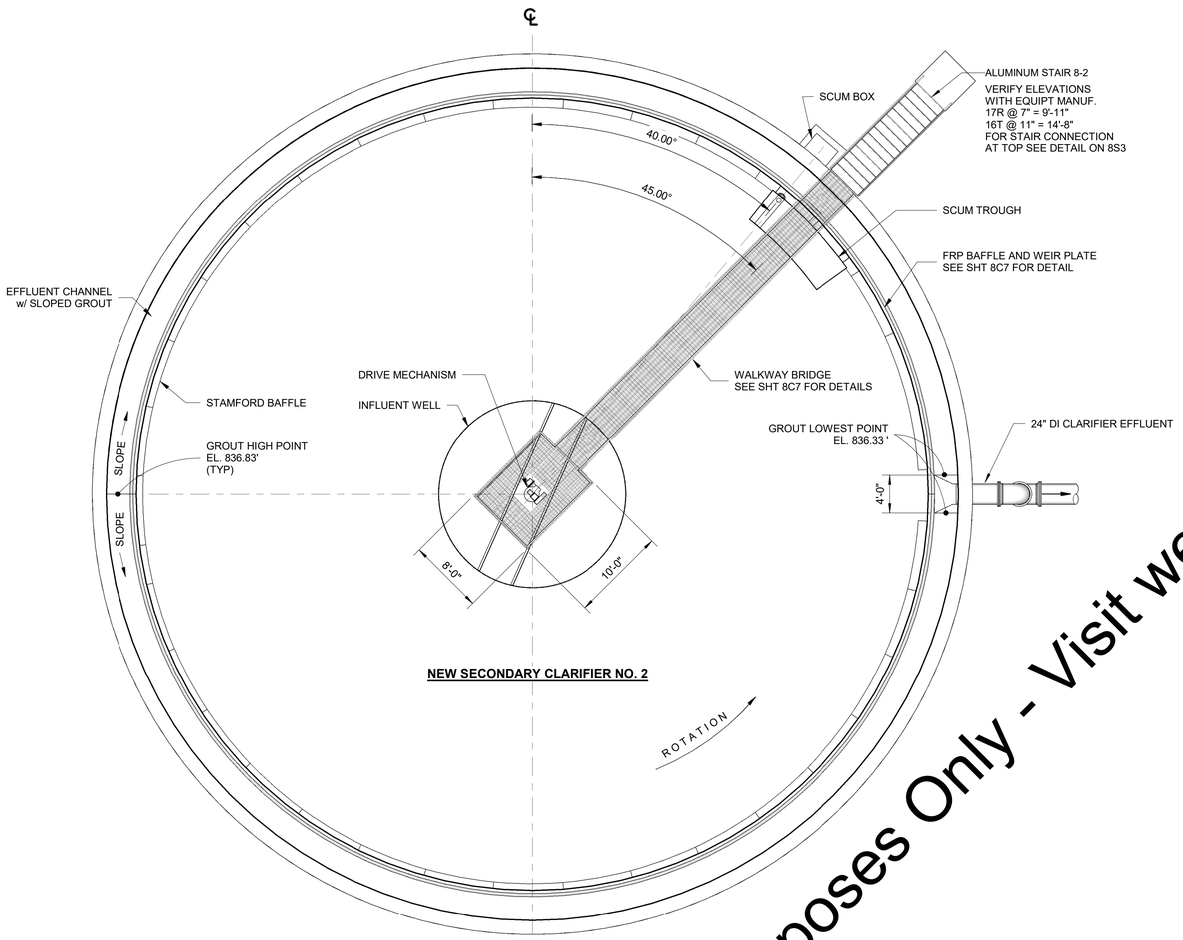

SECONDARY CLARIFIER NO. 2

0 4 8 16 FT 1/8"=1'-0"

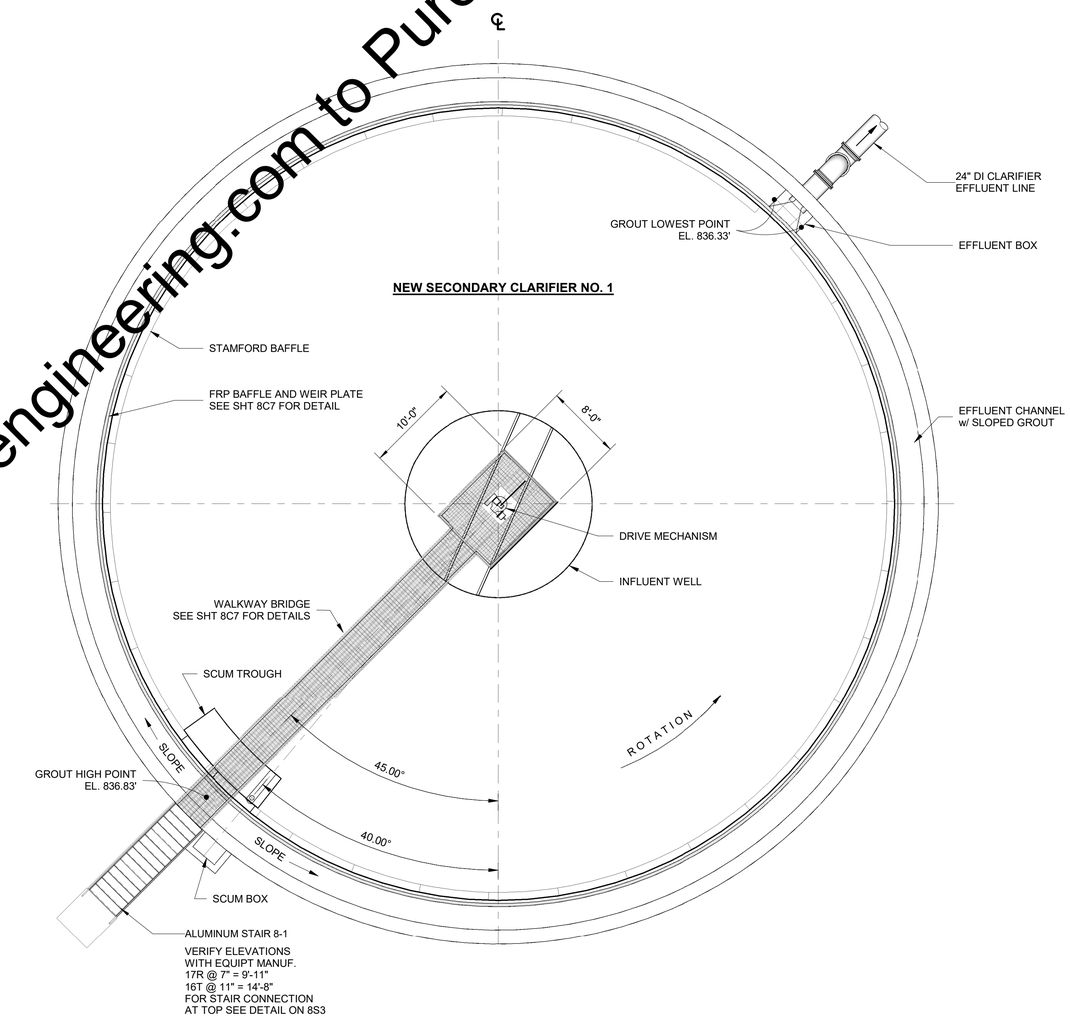

SECONDARY CLARIFIER NO.1

0 4 8 16 FT 1/8"=1'-0"

"For Vewing Purposes Only - Visit wesslerengineering.com to Purchase"

SCALE VERIFICATION	DRAWN BY	TMLN
BAR IS ONE INCH LONG ON ORIGINAL DRAWING	CHECKED BY	BRP
	APPROVED BY	RWH
	ISSUE DATE	MARCH 2020
	PROJECT NUMBER	193216-04-001

NO.	DATE	INITIALS	REVISION DESCRIPTION

ROBERT W. HOLDEN II REGISTERED No. 10000096 STATE OF INDIANA PROFESSIONAL ENGINEER 3/4/2020

WESSLER ENGINEERING

More than a Project™

WASTEWATER SYSTEM EXPANSION

CITY OF FRANKFORT, INDIANA

CONTRACT A - WASTEWATER TREATMENT PLANT

NEW SECONDARY CLARIFIERS NO. 1 AND NO. 2

UPPER PLANS

SHEET NO. **8C5**

PAGE NO. 89

Plotted: 2/26/2020 4:18:01 PM C:\users\JonathanL\Documents\193216-New Secondary Clarifiers_CENTRAL - R19_JonathanL_WE.rvt

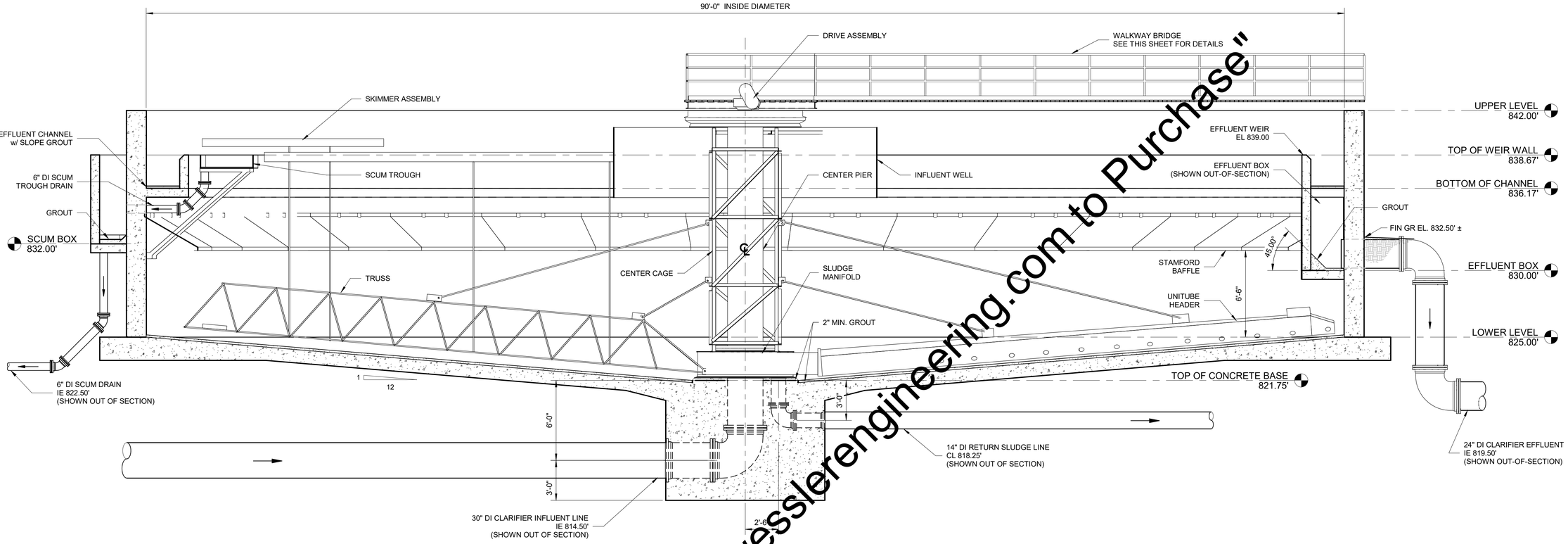

TYPICAL CROSS SECTION

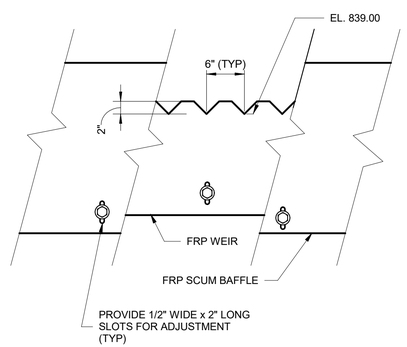

FRONT ELEVATION

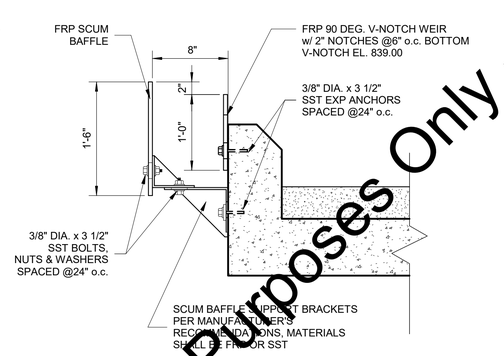

TYPICAL SECTION

WEIR AND BAFFLE DETAILS

SCALE: NONE

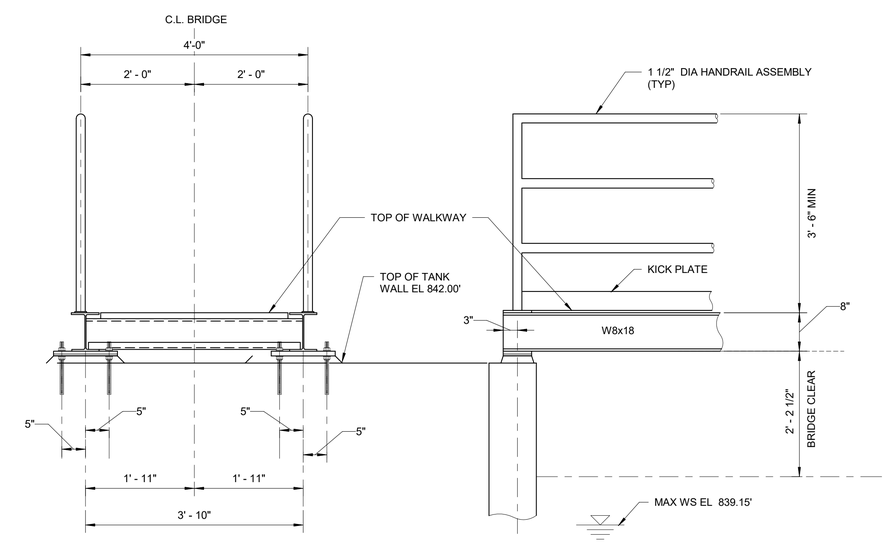

TYPICAL BRIDGE AND HANDRAIL DETAIL

SCALE: NONE

"For Viewing Purposes Only - Visit wesslerengineering.com to Purchase"

SCALE VERIFICATION	DRAWN BY	MLN
BAR IS ONE INCH LONG ON ORIGINAL DRAWING	CHECKED BY	BRP
	APPROVED BY	RWH
	ISSUE DATE	MARCH 2020
	PROJECT NUMBER	193216-04-001

NO.	DATE	INITIALS	REVISION DESCRIPTION

ROBERT W. HOLDEN, II
REGISTERED
No. 10000096
STATE OF INDIANA
PROFESSIONAL ENGINEER
3/4/2020

WESSLER ENGINEERING
More than a Project™

WASTEWATER SYSTEM EXPANSION

CITY OF FRANKFORT, INDIANA

CONTRACT A - WASTEWATER TREATMENT PLANT

NEW SECONDARY CLARIFIERS NO. 1 AND NO. 2

TYPICAL CROSS SECTION AND DETAILS

SHEET NO. **8C6**

PAGE NO. 90

Plotted: 3/4/2020 3:30:14 PM C:\users\CurtisG\Documents\193216-New Secondary Clarifiers_CENTRAL - R19_CurtisGrannan.rvt

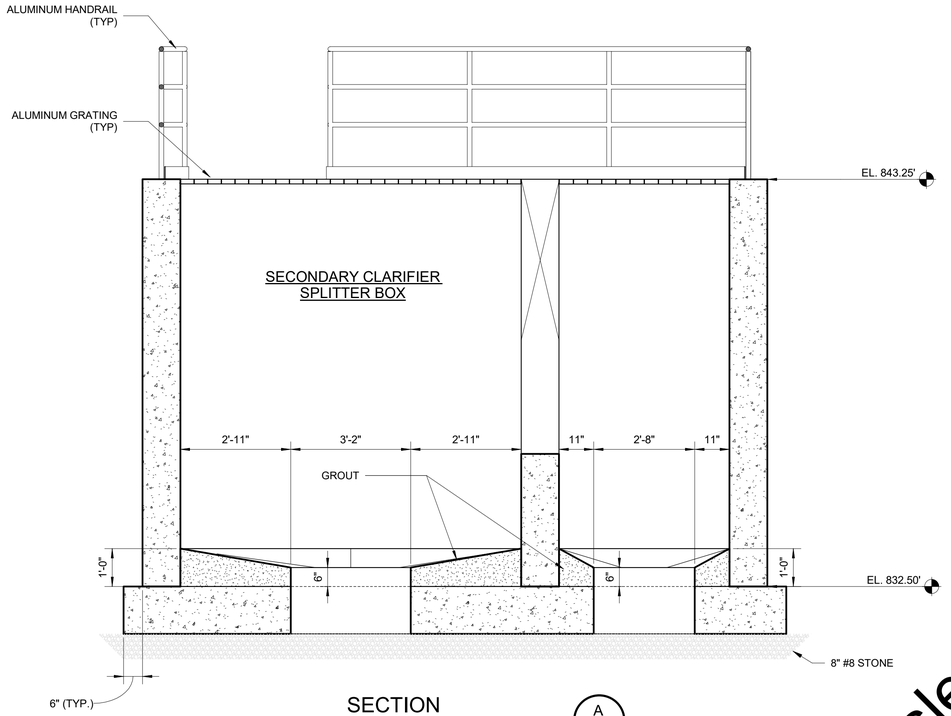

SECTION A 8S1

0 1 2 4 FT 1/2"=1'-0"

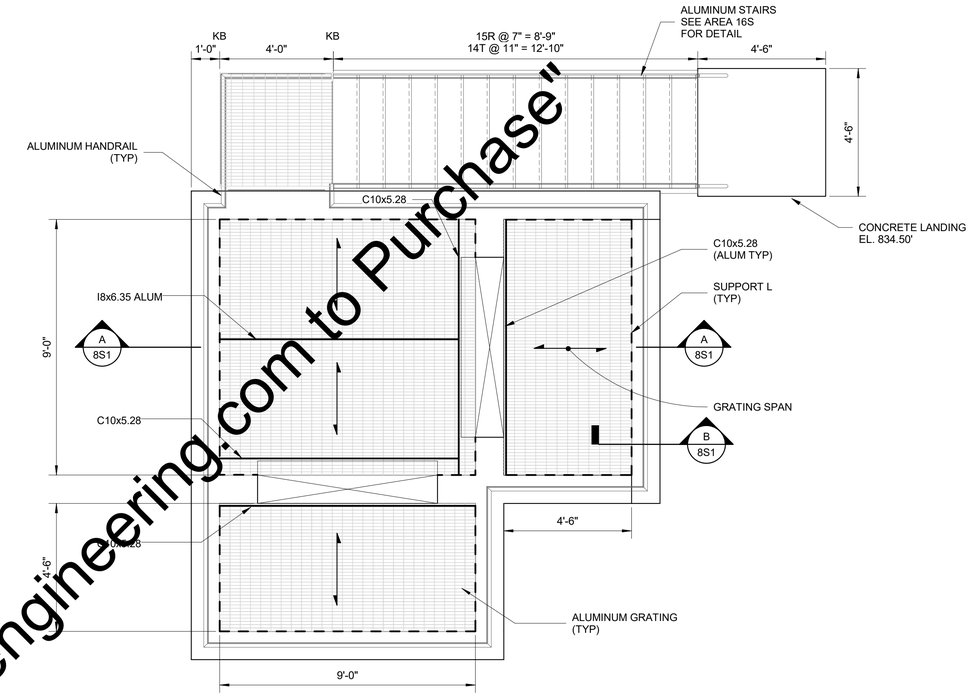

UPPER LEVEL FRAMING PLAN

0 2 4 6 FT 3/8"=1'-0"

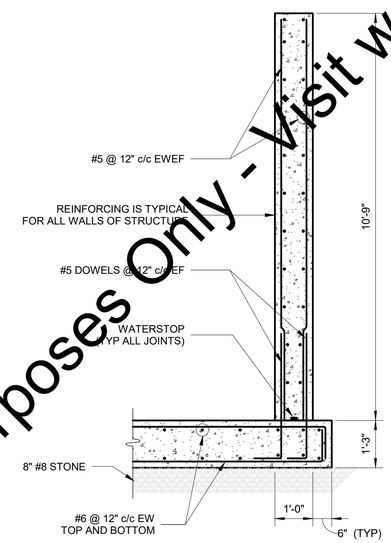

SECTION B 8S1

0 1 2 4 FT 1/2"=1'-0"

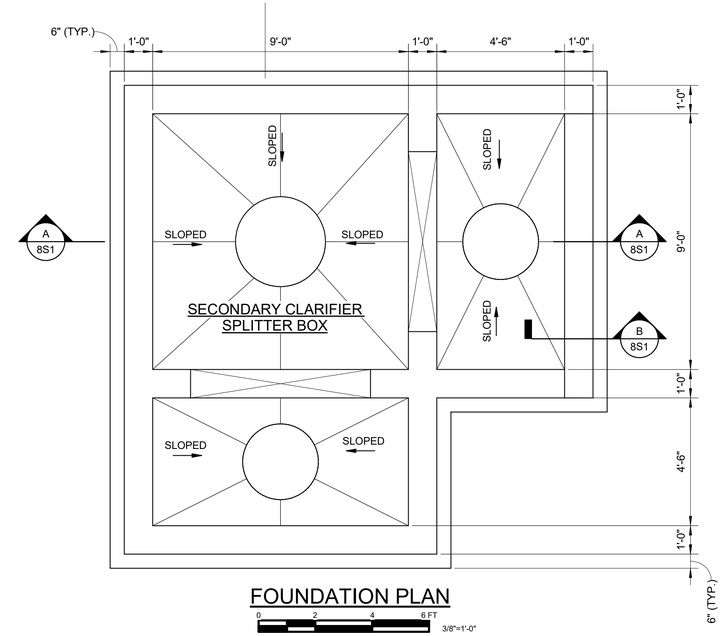

FOUNDATION PLAN

0 2 4 6 FT 3/8"=1'-0"

FOR STRUCTURAL GENERAL NOTES SEE 1S1.
FOR STANDARD DETAILS SEE AREA 16S SHEETS.

"For Vewing Purposes Only - Visit wesslerengineering.com to Purchase"

SCALE VERIFICATION	DRAWN BY	JL
BAR IS ONE INCH LONG ON ORIGINAL DRAWING	CHECKED BY	JRB
	APPROVED BY	JRB
	ISSUE DATE	MARCH 2020
	PROJECT NUMBER	193216-04-001

NO.	DATE	INITIALS	REVISION DESCRIPTION

JEFFREY ROSS BALLARD REGISTERED No. 60860191 STATE OF INDIANA PROFESSIONAL ENGINEER 3/4/2020

WESSLER ENGINEERING
More than a Project™

WASTEWATER SYSTEM EXPANSION
CITY OF FRANKFORT, INDIANA
CONTRACT A - WASTEWATER TREATMENT PLANT

NEW SECONDARY CLARIFIER SPLITTER BOX STRUCTUAL PLANS AND SECTION

SHEET NO. **8S1**

PAGE NO. 91

Plotted: 2/26/2020 4:18:07 PM C:\users\Jonathan\L\Documents\193216-New Secondary Clarifiers_CENTRAL - R19_Jonathan_WE.rvt

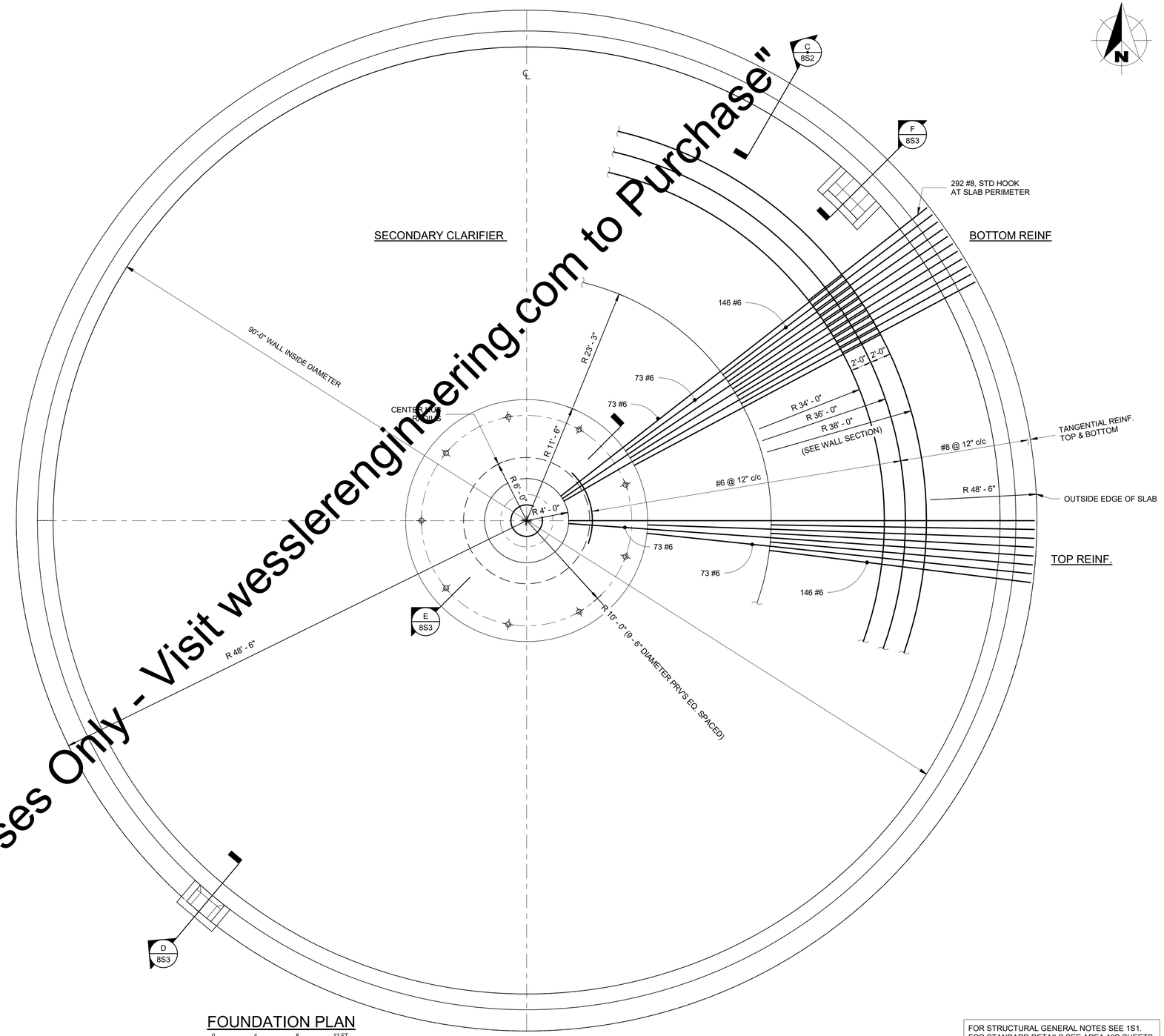

FOUNDATION PLAN

0 4 8 12 FT
3/16"=1'-0"

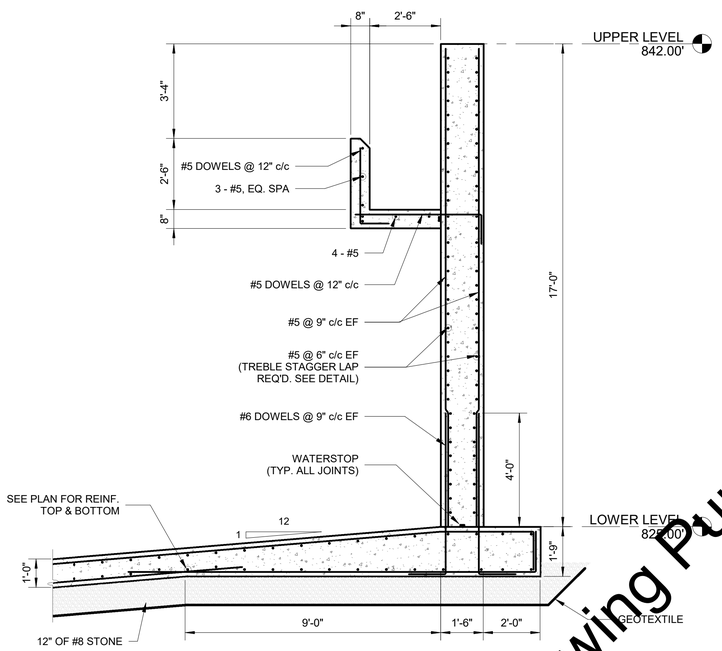

SECTION C 8S2

0 2 4 6 FT
3/8"=1'-0"

FOR STRUCTURAL GENERAL NOTES SEE 1S1.
FOR STANDARD DETAILS SEE AREA 16S SHEETS.

"For Viewing Purposes Only - Visit wesslerengineering.com to Purchase"

SCALE VERIFICATION	DRAWN BY	JB
BAR IS ONE INCH LONG ON ORIGINAL DRAWING	CHECKED BY	JRB
	APPROVED BY	JRB
	ISSUE DATE	MARCH 2020
	PROJECT NUMBER	193216-04-001

NO.	DATE	INITIALS	REVISION DESCRIPTION

JEFFREY ROSS BALLARD REGISTERED No. 60860191 STATE OF INDIANA PROFESSIONAL ENGINEER 3/4/2020

WESSLER ENGINEERING
More than a Project™

WASTEWATER SYSTEM EXPANSION
CITY OF FRANKFORT, INDIANA
CONTRACT A - WASTEWATER TREATMENT PLANT

NEW SECONDARY CLARIFIERS NO. 1 AND NO. 2
STRUCTURAL PLANS

SHEET NO. **8S2**

Plotted: 2/26/2020 4:18:09 PM C:\users\JonathanL\Documents\193216-New Secondary Clarifiers_CENTRAL - R19_JonathanL_WE.rvt

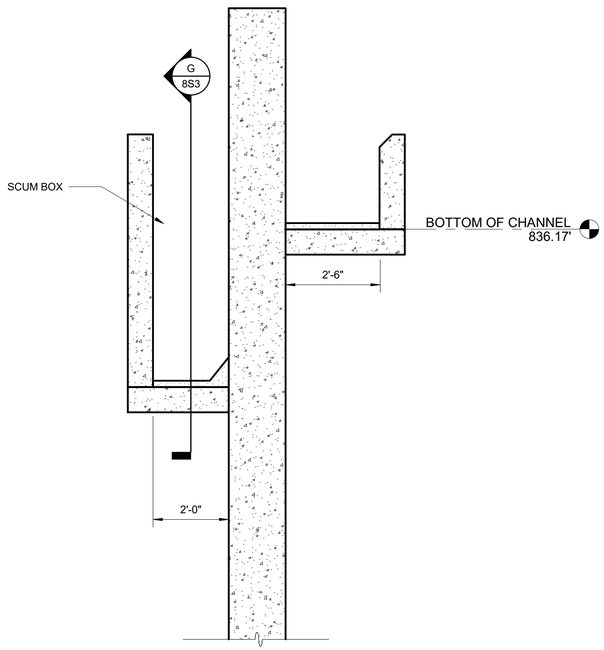

SECTION D 8S2
0 1 2 4 FT 1/2"=1'-0"

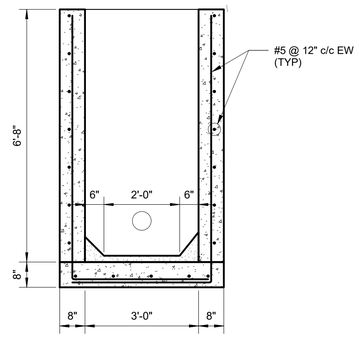

SECTION G 8S3
0 1 2 4 FT 1/2"=1'-0"

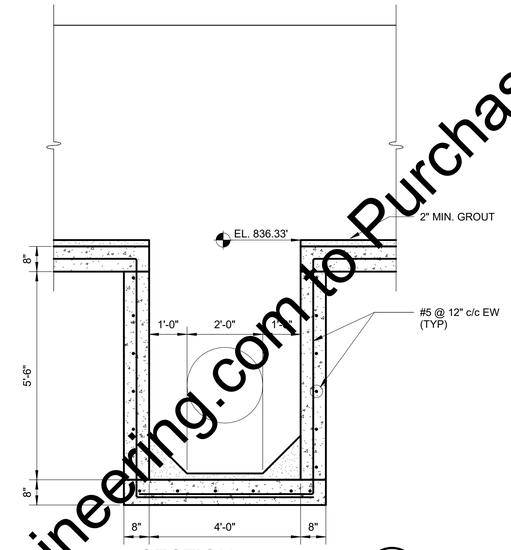

SECTION H 8S3
0 1 2 4 FT 1/2"=1'-0"

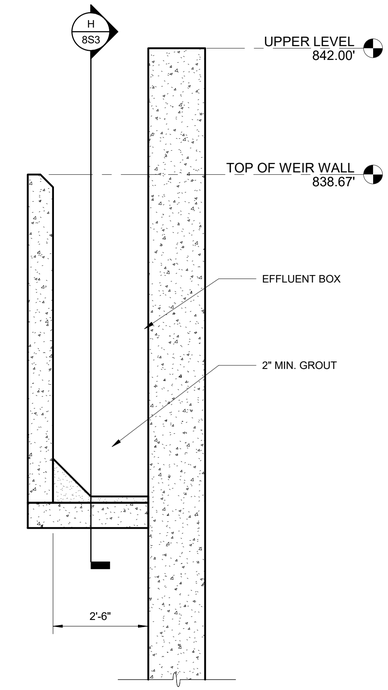

SECTION F 8S2
0 1 2 4 FT 1/2"=1'-0"

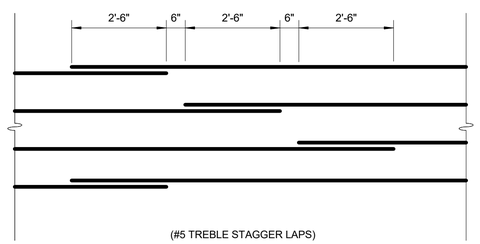

DETAIL 1
0 1 2 4 FT 1/2"=1'-0"

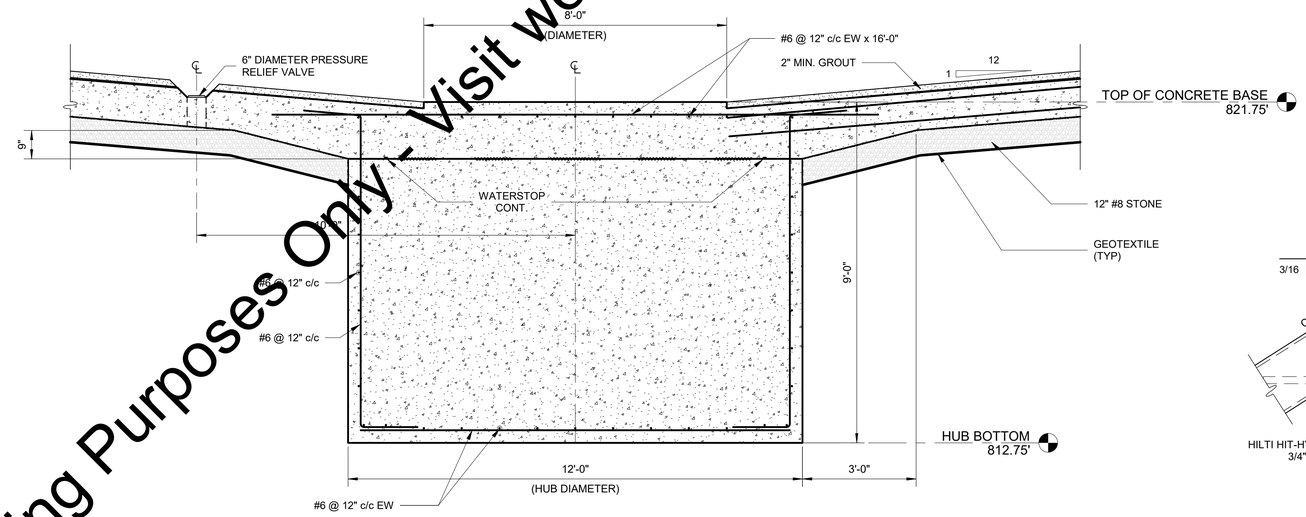

SECTION E 8S2
0 1 2 4 FT 1/2"=1'-0"

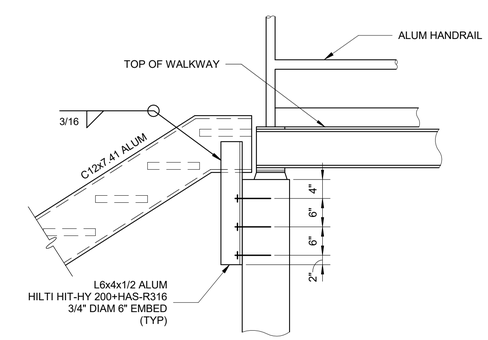

STAIR DETAIL 2
0 1 2 3 FT 3/4"=1'-0"

FOR STRUCTURAL GENERAL NOTES SEE 1S1.
FOR STANDARD DETAILS SEE AREA 16S SHEETS.

SCALE VERIFICATION	DRAWN BY	JB
BAR IS ONE INCH LONG ON ORIGINAL DRAWING	CHECKED BY	JRB
	APPROVED BY	JRB
	ISSUE DATE	MARCH 2020
	PROJECT NUMBER	193216-04-001

NO.	DATE	INITIALS	REVISION DESCRIPTION

JEFFREY ROSS BALLARD REGISTERED No. 60860191 STATE OF INDIANA PROFESSIONAL ENGINEER 3/4/2020

WESSLER ENGINEERING
More than a Project™

WASTEWATER SYSTEM EXPANSION
CITY OF FRANKFORT, INDIANA
CONTRACT A - WASTEWATER TREATMENT PLANT

NEW SECONDARY CLARIFIERS NO. 1 AND NO. 2
STRUCTURAL SECTIONS AND DETAILS

SHEET NO. **8S3**
PAGE NO. 93

"For Viewing Purposes Only - Visit wesslerengineering.com to Purchase"

Plotted: 3/4/2020 3:32:13 PM C:\users\CurtisG\Documents\193216-New Secondary Clarifiers_CENTRAL - R19_CurtisGrannan.rvt

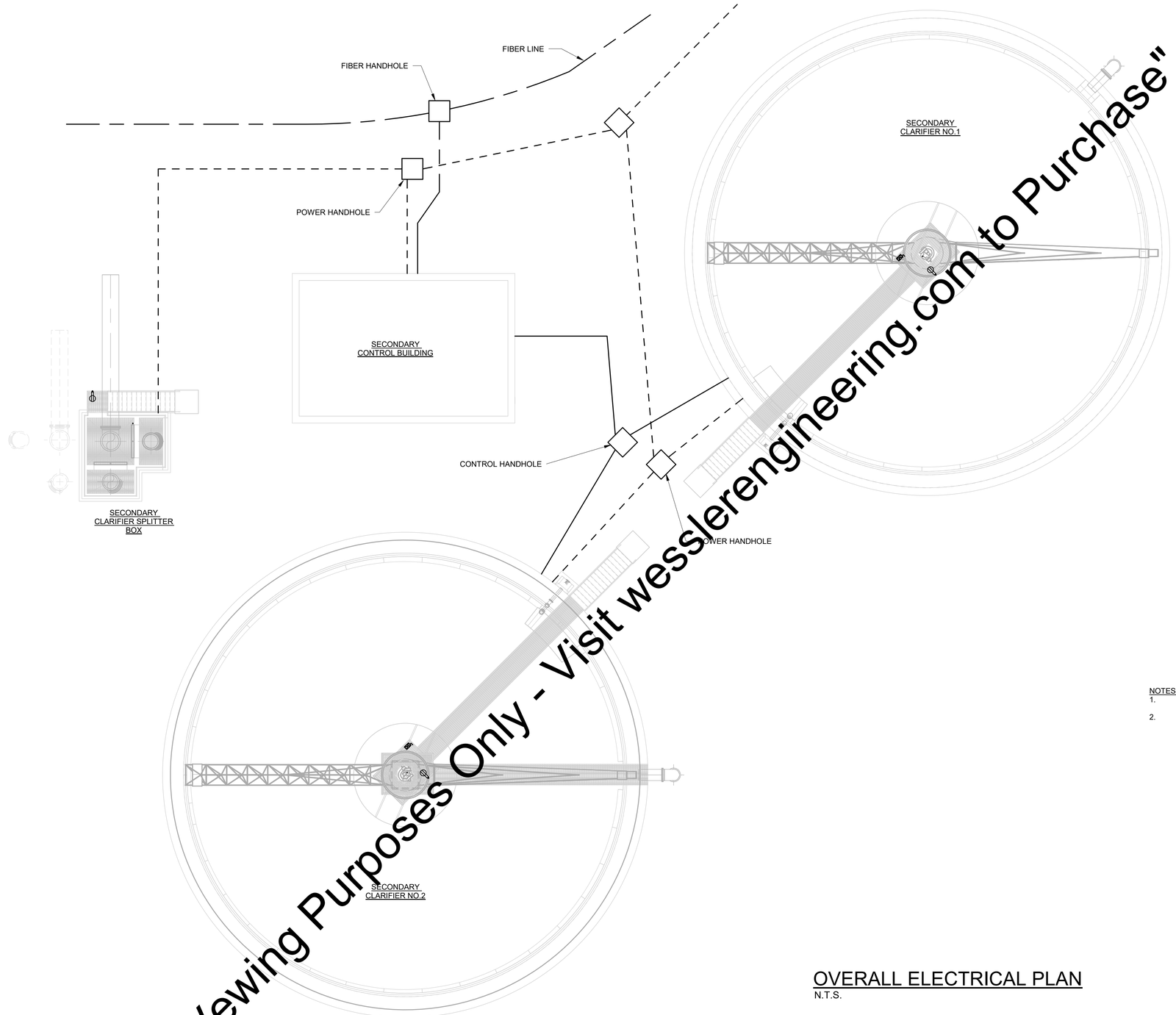

NOTES:
1. SEE ONE-LINE DIAGRAMS AND PANEL SCHEDULES FOR CONDUIT WIRE REQUIREMENTS.
2. SEE SHEET 2E1 AND 2E3 FOR ADDITIONAL SITE PLAN INFORMATION.

OVERALL ELECTRICAL PLAN

N.T.S.

"For Vewing Purposes Only - Visit wesslerengineering.com to Purchase"

SCALE VERIFICATION		
BAR IS ONE INCH LONG ON ORIGINAL DRAWING	DRAWN BY	LAS
	CHECKED BY	WCM
	APPROVED BY	WCM
	ISSUE DATE	MARCH 2020
	PROJECT NUMBER	193216-04-001

NO.	DATE	INITIALS	REVISION DESCRIPTION

WAYNE C. MOORE REGISTERED No. 10707476 STATE OF INDIANA PROFESSIONAL ENGINEER 3/4/2020

WESSLER ENGINEERING
More than a Project™

WASTEWATER TREATMENT PLANT EXPANSION
FRANKFORT UTILITIES
FRANKFORT, INDIANA

NEW SECONDARY CLARIFIERS COMPLEX
OVERALL POWER PLAN

SHEET NO. **8E1**

PAGE NO. 94

Plotted: 3/4/2020 1:49:17 PM J:\Frankfort\Projects\193216 Frankfort WWTP Exp\CAD 04-0011\Revit\Models\193216-EL-NEW SECONDARY CLARIFIERS-R19.rvt

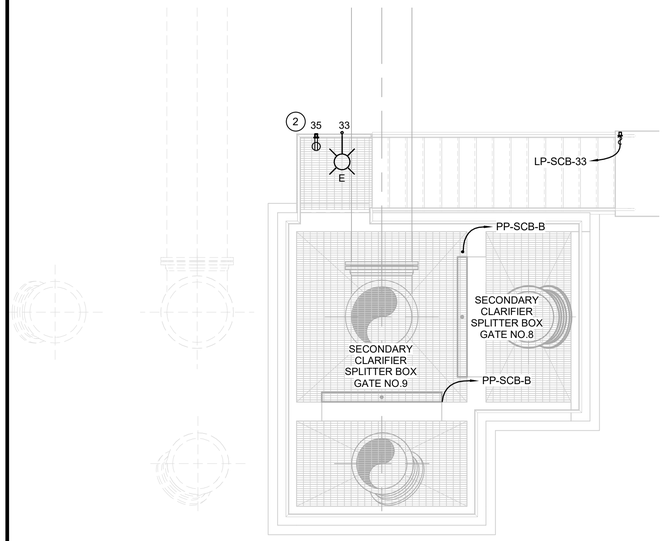

SPLITTER BOX

0 2 4 8 FT
1/4"=1'-0"

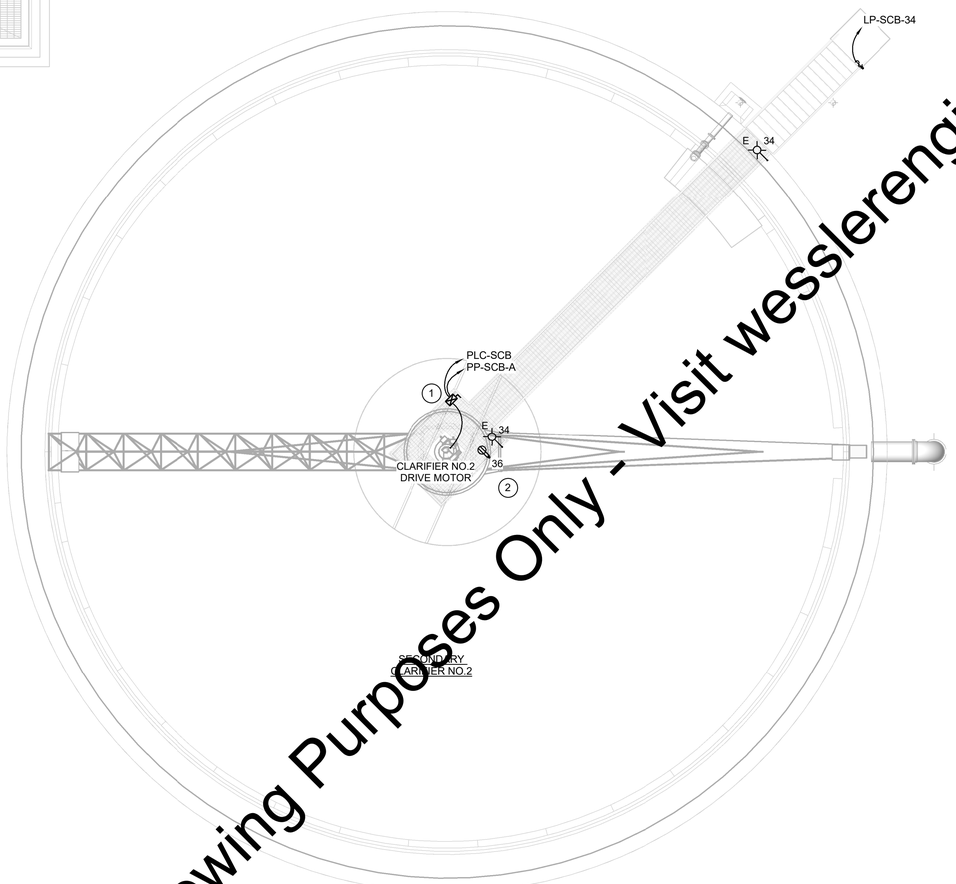

SECONDARY CLARIFIER NO.2

0 4 8 16 FT
1/8"=1'-0"

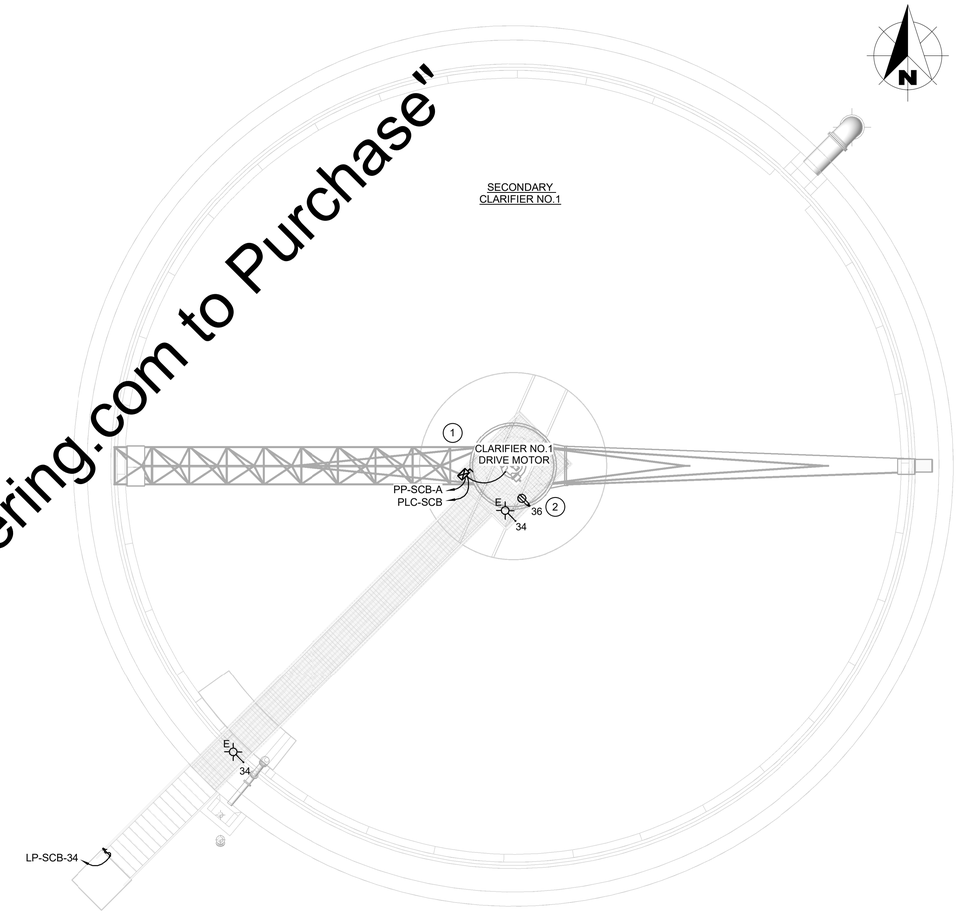

SECONDARY CLARIFIER NO.1

0 4 8 16 FT
1/8"=1'-0"

(#) KEYED NOTES

1 COMBINATION MOTOR STARTER, SIZE 1, NEMA 4X, SST.

2 GFCI RECEPTACLE IN A WEATHER-PROOF, CORROSION RESISTANT, IN-USE TYPE BOX.

"For Vewing Purposes Only - Visit wesslerengineering.com to Purchase"

SCALE VERIFICATION	DRAWN BY	DAS
BAR IS ONE INCH LONG ON ORIGINAL DRAWING	CHECKED BY	WCM
	APPROVED BY	WCM
	ISSUE DATE	MARCH 2020
	PROJECT NUMBER	193216-04-001

NO.	DATE	INITIALS	REVISION DESCRIPTION

WAYNE C. MOORE REGISTERED No. 10707476 STATE OF INDIANA PROFESSIONAL ENGINEER 3/4/2020

WESSLER ENGINEERING
More than a Project™

WASTEWATER TREATMENT PLANT EXPANSION

FRANKFORT UTILITIES
FRANKFORT, INDIANA

NEW SECONDARY CLARIFIERS NO.1 AND 2 - POWER PLANS

SHEET NO. **8E2**

PAGE NO. 95

Plotted: 3/4/2020 10:07:54 AM J:\Frankfort\Projects\193216 Frankfort WWTP Exp\CAD 04-001\Revit\Models\193216-EL-NEW SECONDARY CLARIFIERS-R19.rvt

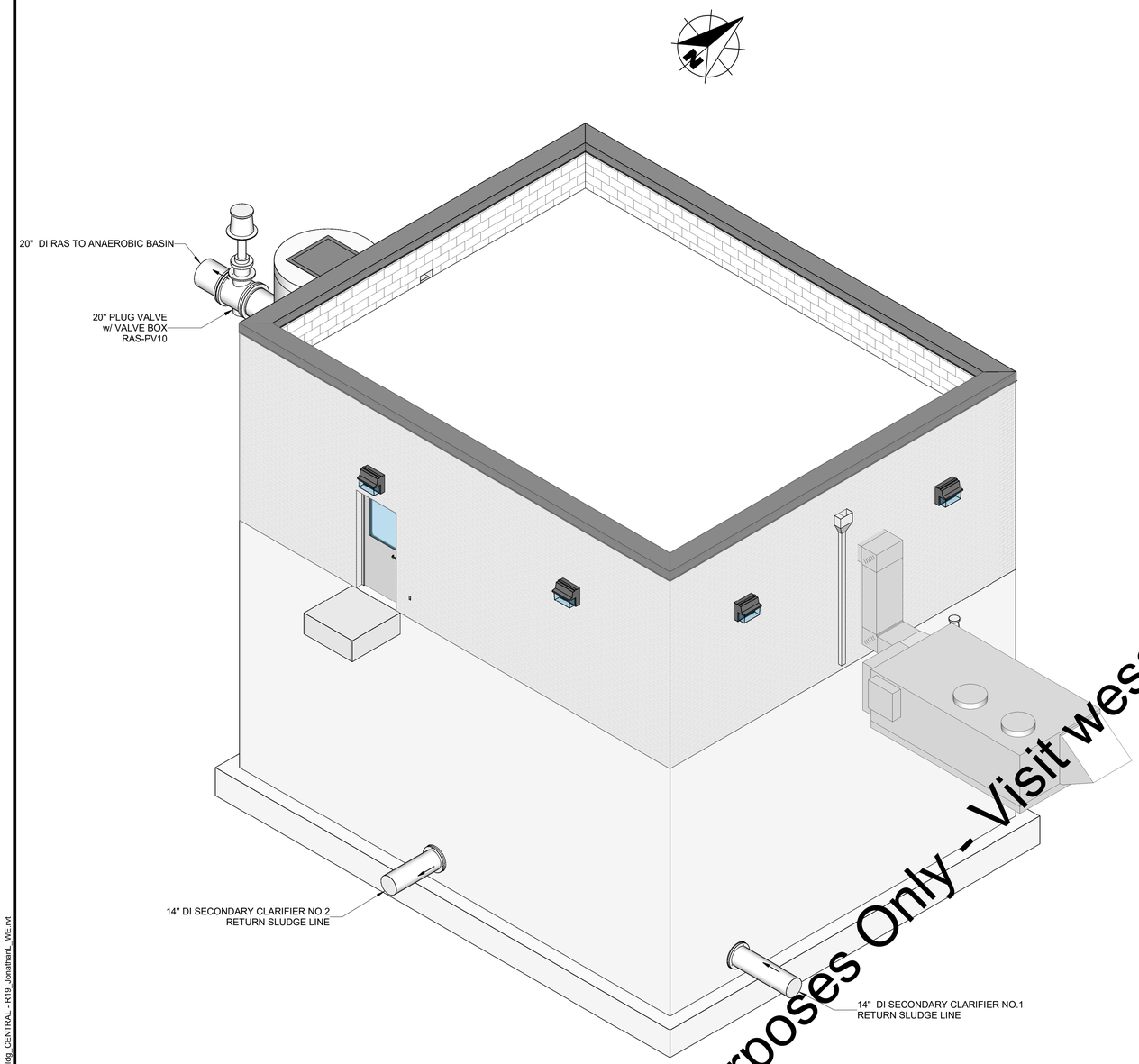

PERSPECTIVE VIEW - SOUTHEAST

SCALE: NONE

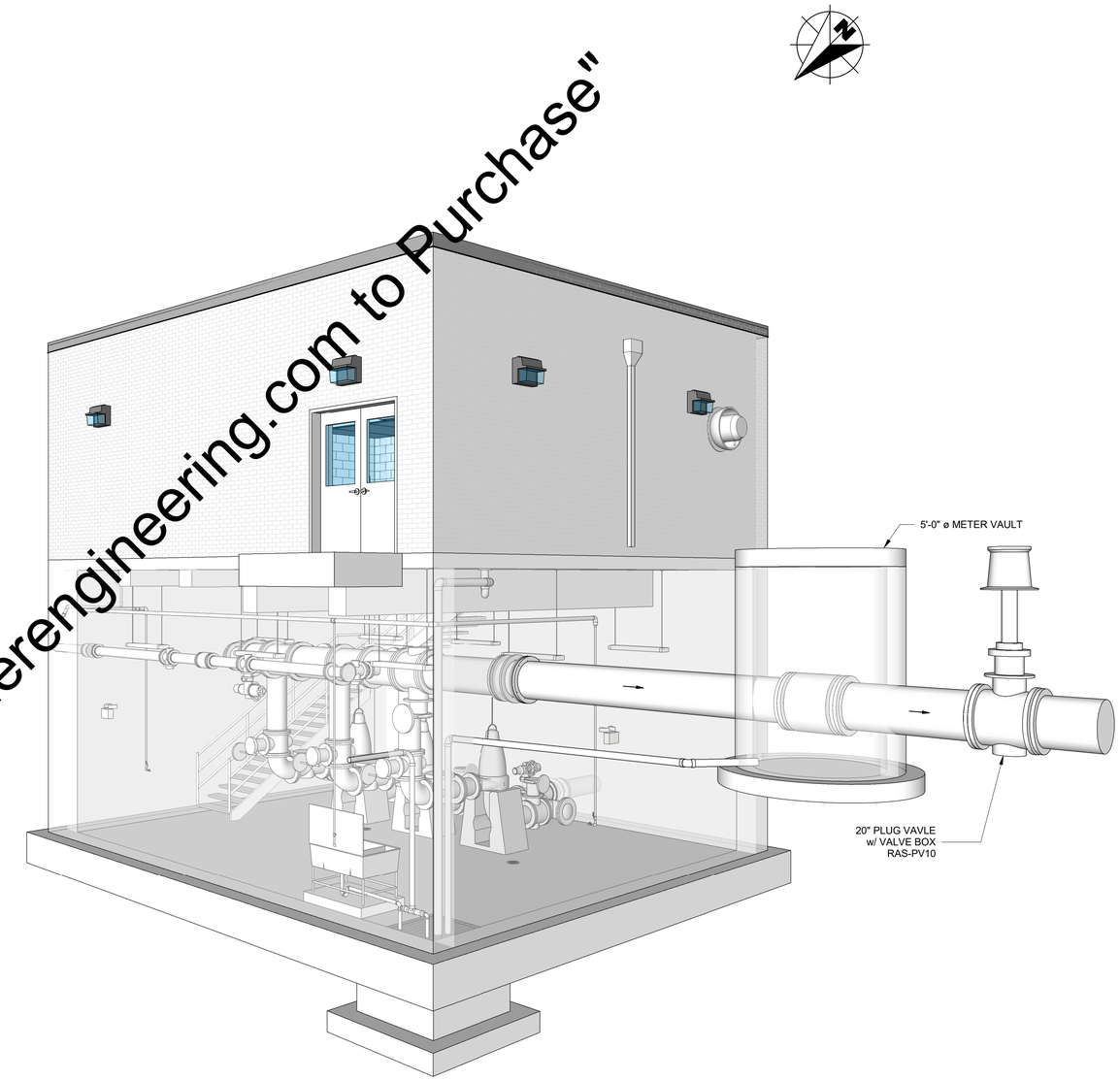

PERSPECTIVE VIEW - NORTHWEST

SCALE: NONE

"For Vewing Purposes Only - Visit wesslerengineering.com to Purchase"

SCALE VERIFICATION	DRAWN BY	TMLN
BAR IS ONE INCH LONG ON ORIGINAL DRAWING	CHECKED BY	BRP
	APPROVED BY	RWH
	ISSUE DATE	MARCH 2020
	PROJECT NUMBER	193216-04-001

NO.	DATE	INITIALS	REVISION DESCRIPTION

ROBERT W. HOLDEN, II
REGISTERED
No. 10000096
STATE OF INDIANA
PROFESSIONAL ENGINEER
3/4/2020

WESSLER ENGINEERING
More than a Project™

WASTEWATER SYSTEM EXPANSION

CITY OF FRANKFORT, INDIANA
CONTRACT A - WASTEWATER TREATMENT PLANT

NEW SECONDARY CONTROL BUILDING
PERSPECTIVE VIEW

SHEET NO. **9G1**

PAGE NO. 96

Plotted: 3/4/2020 3:36:13 PM C:\users\JonathanL\Documents\193216-New Secondary Control Bldg_CENTRAL - R19_JonathanL_WE.rvt

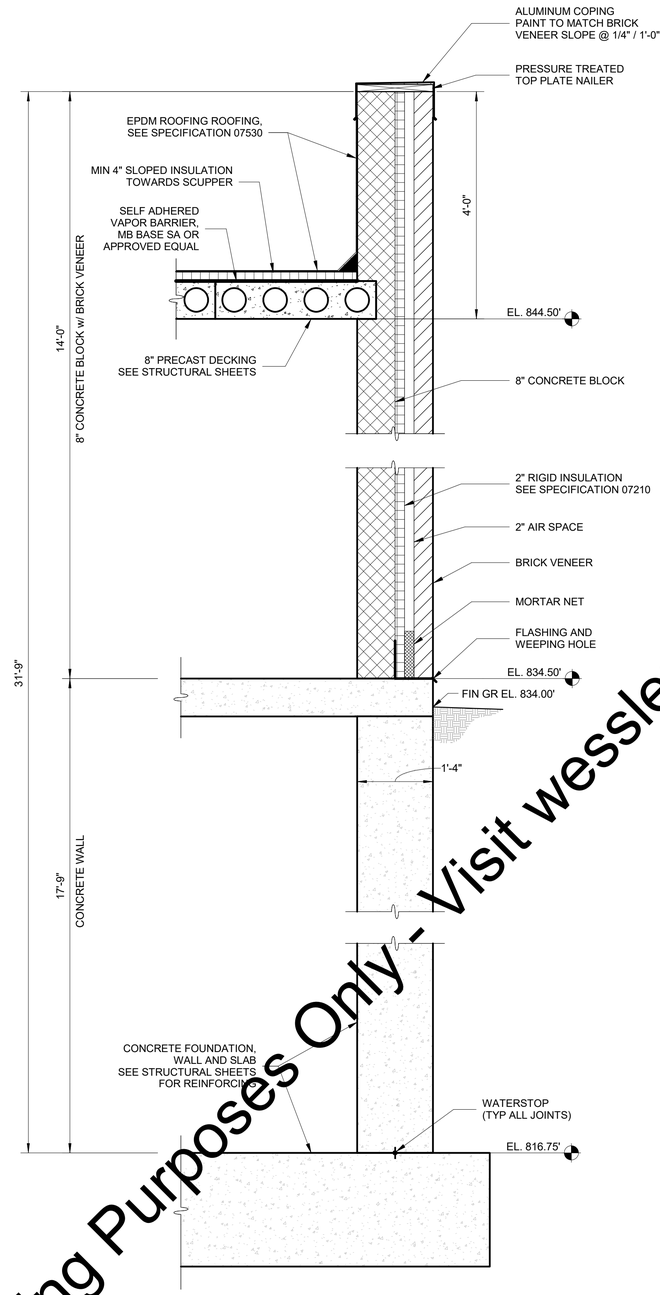

SECTION A 9A1

0 1 2 3 FT 3/4"=1'-0"

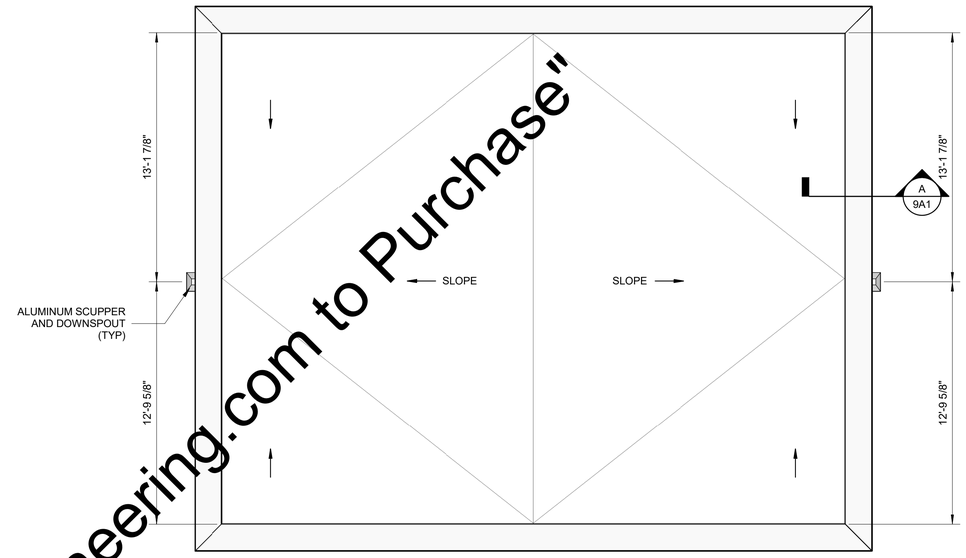

ROOF PLAN

0 2 4 8 FT 1/4"=1'-0"

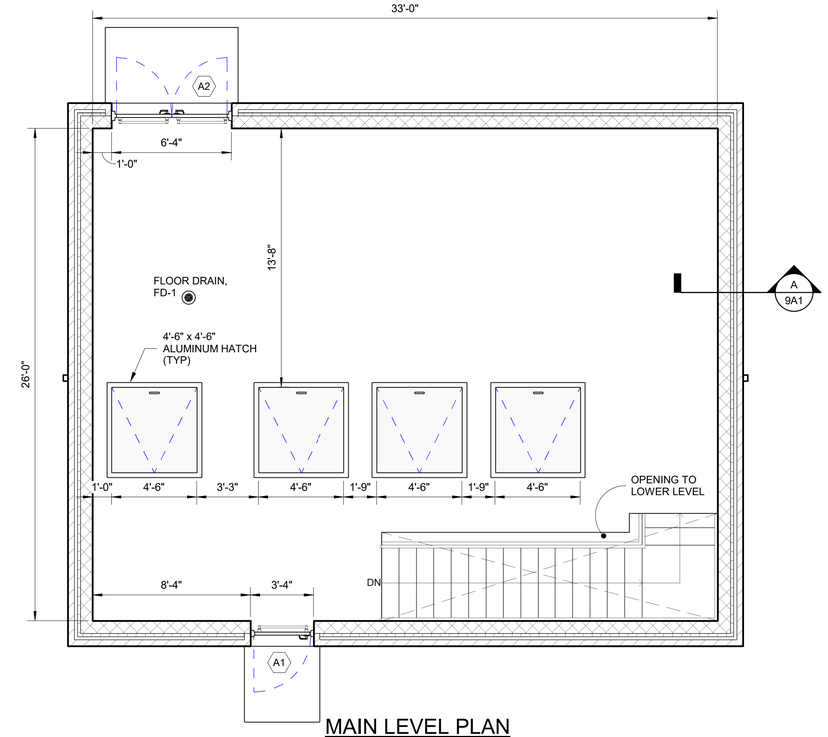

MAIN LEVEL PLAN

0 2 4 8 FT 1/4"=1'-0"

"For Vewing Purposes Only - Visit wesslerengineering.com to Purchase"

SCALE VERIFICATION	DRAWN BY	JL
BAR IS ONE INCH LONG ON ORIGINAL DRAWING	CHECKED BY	BRP
	APPROVED BY	RWH
	ISSUE DATE	MARCH 2020
	PROJECT NUMBER	193216-04-001

NO.	DATE	INITIALS	REVISION DESCRIPTION

ROBERT W. HOLDEN II REGISTERED No. 10000096 STATE OF INDIANA PROFESSIONAL ENGINEER 3/4/2020

WESSLER ENGINEERING

More than a Project™

WASTEWATER SYSTEM EXPANSION

CITY OF FRANKFORT, INDIANA

CONTRACT A - WASTEWATER TREATMENT PLANT

NEW SECONDARY CONTROL BUILDING

PLANS & SECTION

SHEET NO. **9A1**

PAGE NO. 97

Plotted: 3/5/2020 11:56:40 AM C:\users\Jonathan\Documents\193216-New Secondary Control Bldg_CENTRAL - R19_Jonathan_WE.rvt

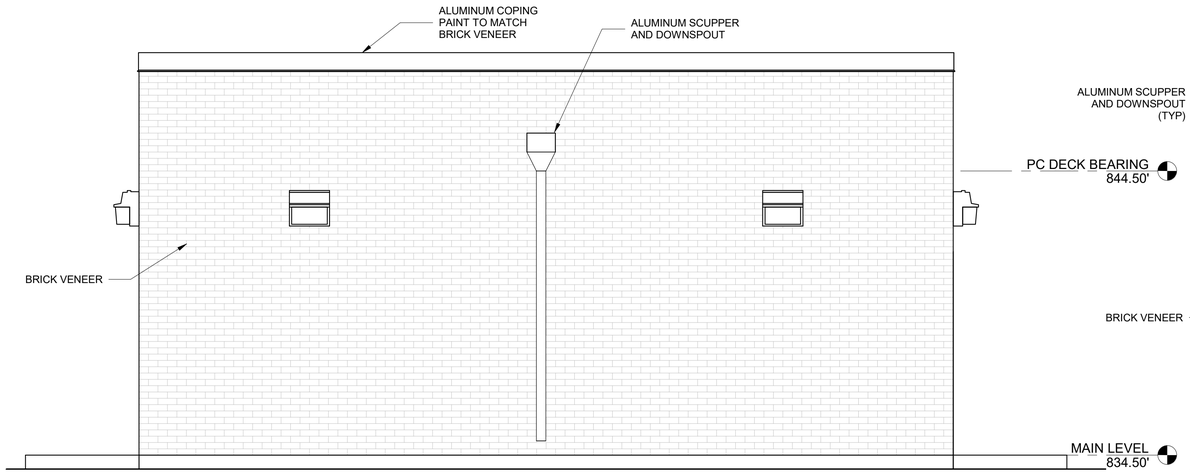

EAST ELEVATION

0 2 4 6 FT 3/8"=1'-0"

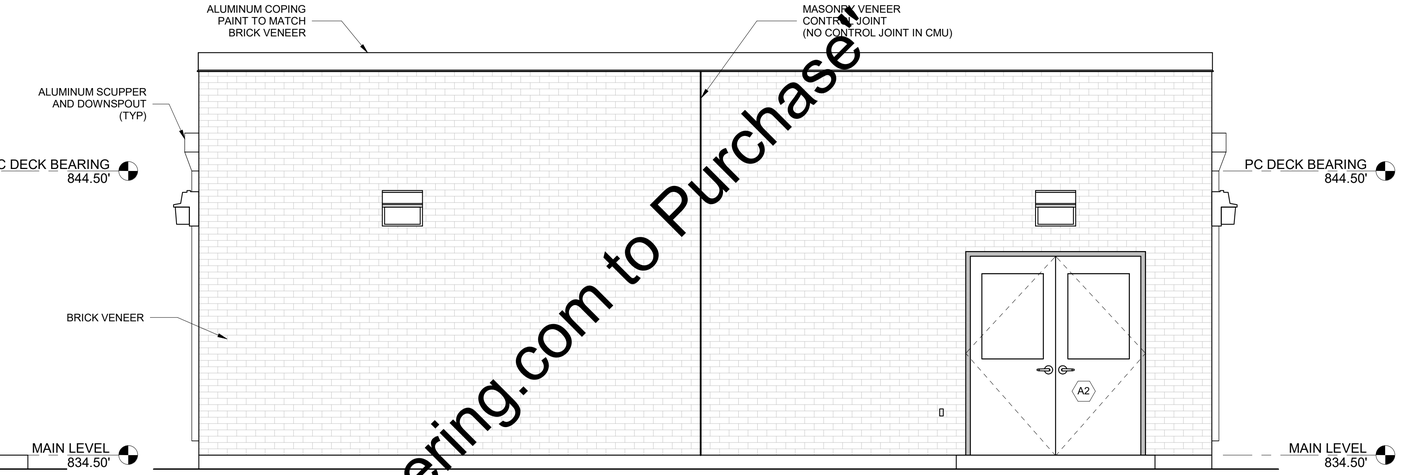

NORTH ELEVATION

0 2 4 6 FT 3/8"=1'-0"

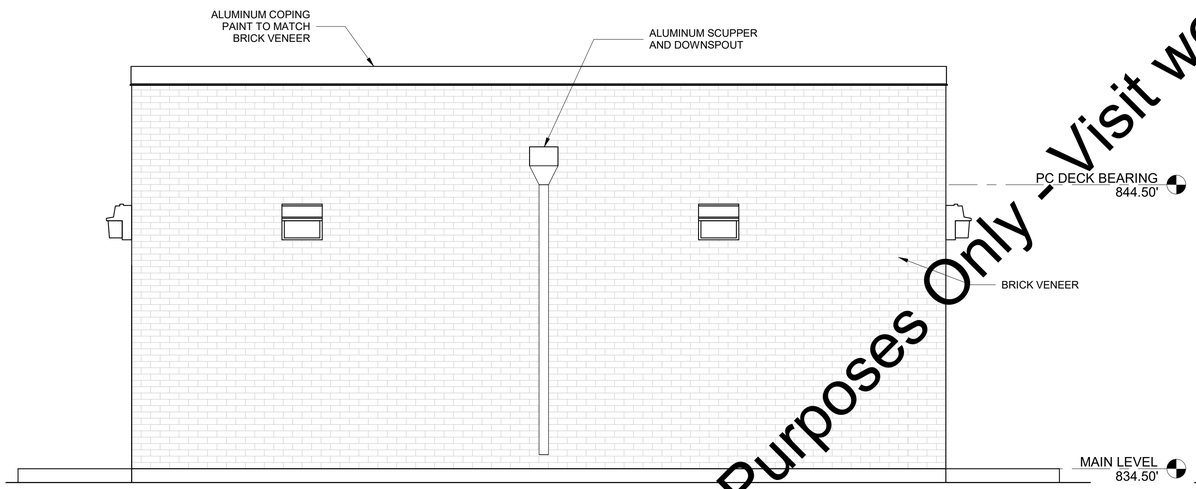

WEST ELEVATION

0 2 4 6 FT 3/8"=1'-0"

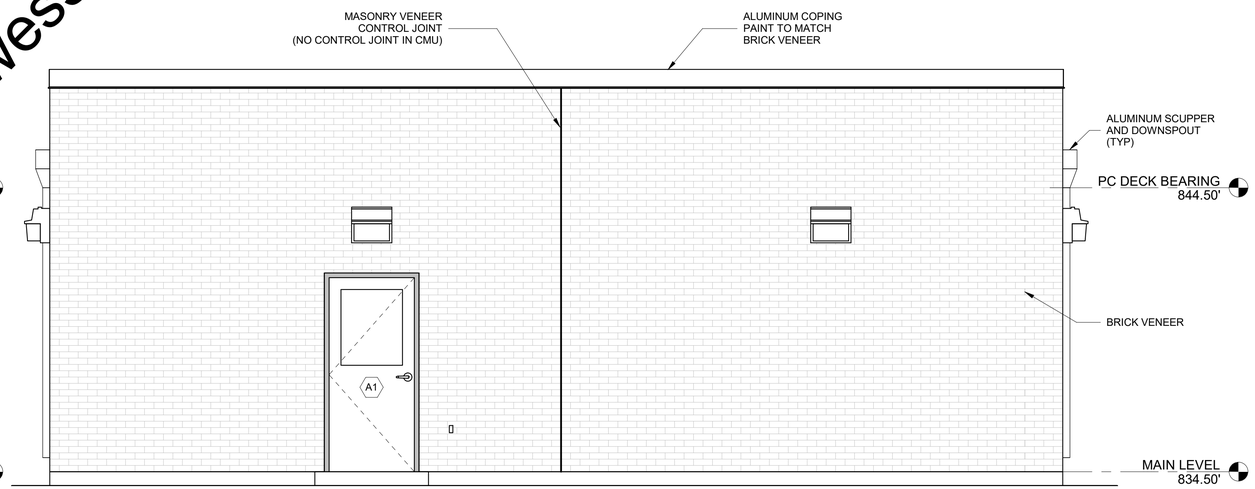

SOUTH ELEVATION

0 2 4 6 FT 3/8"=1'-0"

For Viewing Purposes Only - Visit wesslerengineering.com to Purchase

SCALE VERIFICATION	DRAWN BY	JL
BAR IS ONE INCH LONG ON ORIGINAL DRAWING	CHECKED BY	BRP
	APPROVED BY	RWH
	ISSUE DATE	MARCH 2020
	PROJECT NUMBER	193216-04-001

NO.	DATE	INITIALS	REVISION DESCRIPTION

ROBERT W. HOLDEN, II
REGISTERED
No. 10000096
STATE OF INDIANA
PROFESSIONAL ENGINEER
3/4/2020

WESSLER ENGINEERING
More than a Project™

WASTEWATER SYSTEM EXPANSION
CITY OF FRANKFORT, INDIANA
CONTRACT A - WASTEWATER TREATMENT PLANT

NEW SECONDARY CONTROL BUIDLING ELEVATIONS

SHEET NO. **9A2**

PAGE NO. 98

Plotted: 3/4/2020 3:38:31 PM C:\users\Jonathan\LDocuments\193216-New Secondary Control Bldg_CENTRAL - R19_JonathanL_WE.rvt

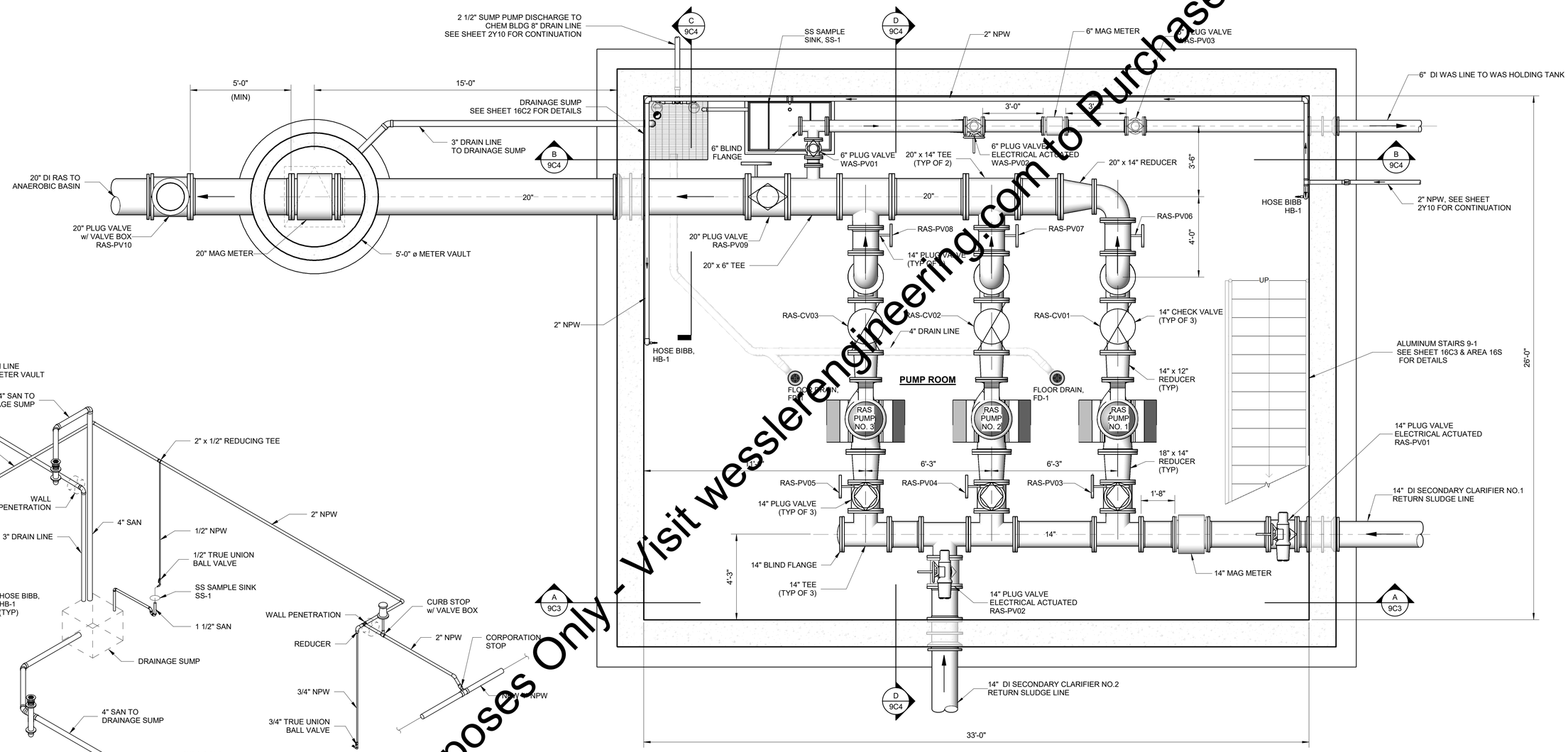

LOWER LEVEL PLAN

0 2 4 6 FT
3/8"=1'-0"

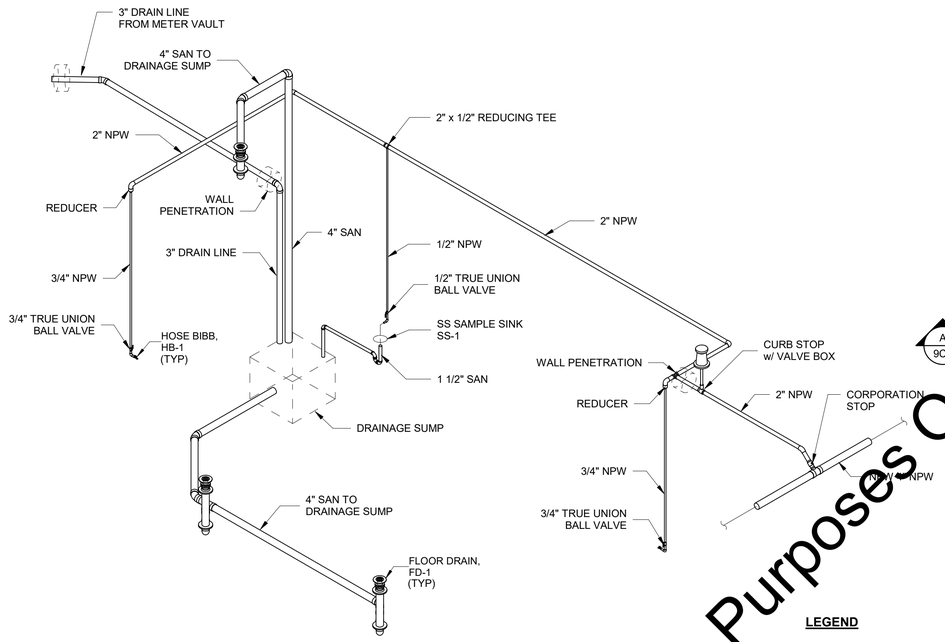

PLUMBING SCHEMATIC

SCALE: NONE

LEGEND

NPW	NON-POTABLE WATER
SAN	SANITARY LINE
→	FLOW DIRECTION

NOTE:

FLOOR DRAIN, FD-1: DUCO CAST IRON BODY WITH FLASHING COLLAR, ADJUSTABLE ROUND 12" NICKEL BRONZE TOP AND 4" BOTTOM OUTLET AS MANUFACTURED BY. J.R. SMITH, MODEL 2140, OR APPROVED EQUAL. PROVIDE TRAP IN SANITARY LINE.

HOSE BIBB, HB-1: 3/4" NPT INLET, 3/4" MALE HOSE NOZZLE, CHROME PLATED SOLID BRASS, WALL MOUNTED WITH ATMOSPHERIC VACUUM BREAKER.

"For Viewing Purposes Only - Visit wesslerengineering.com to Purchase"

SCALE VERIFICATION	DRAWN BY	TMLN
BAR IS ONE INCH LONG ON ORIGINAL DRAWING	CHECKED BY	BRP
	APPROVED BY	RWH
	ISSUE DATE	MARCH 2020
	PROJECT NUMBER	193216-04-001

NO.	DATE	INITIALS	REVISION DESCRIPTION

ROBERT W. HOLDEN, II REGISTERED No. 10000096 STATE OF INDIANA PROFESSIONAL ENGINEER 3/4/2020

WESSLER ENGINEERING
More than a Project™

WASTEWATER SYSTEM EXPANSION
CITY OF FRANKFORT, INDIANA
CONTRACT A - WASTEWATER TREATMENT PLANT

NEW SECONDARY CONTROL BUILDING
LOWER LEVEL PLAN

SHEET NO. **9C1**

PAGE NO. 99

Plotted: 2/26/2020 10:30:33 AM C:\users\JonathanL\Documents\193216-New Secondary Control Bldg_CENTRAL - R19_JonathanL_WE.rvt

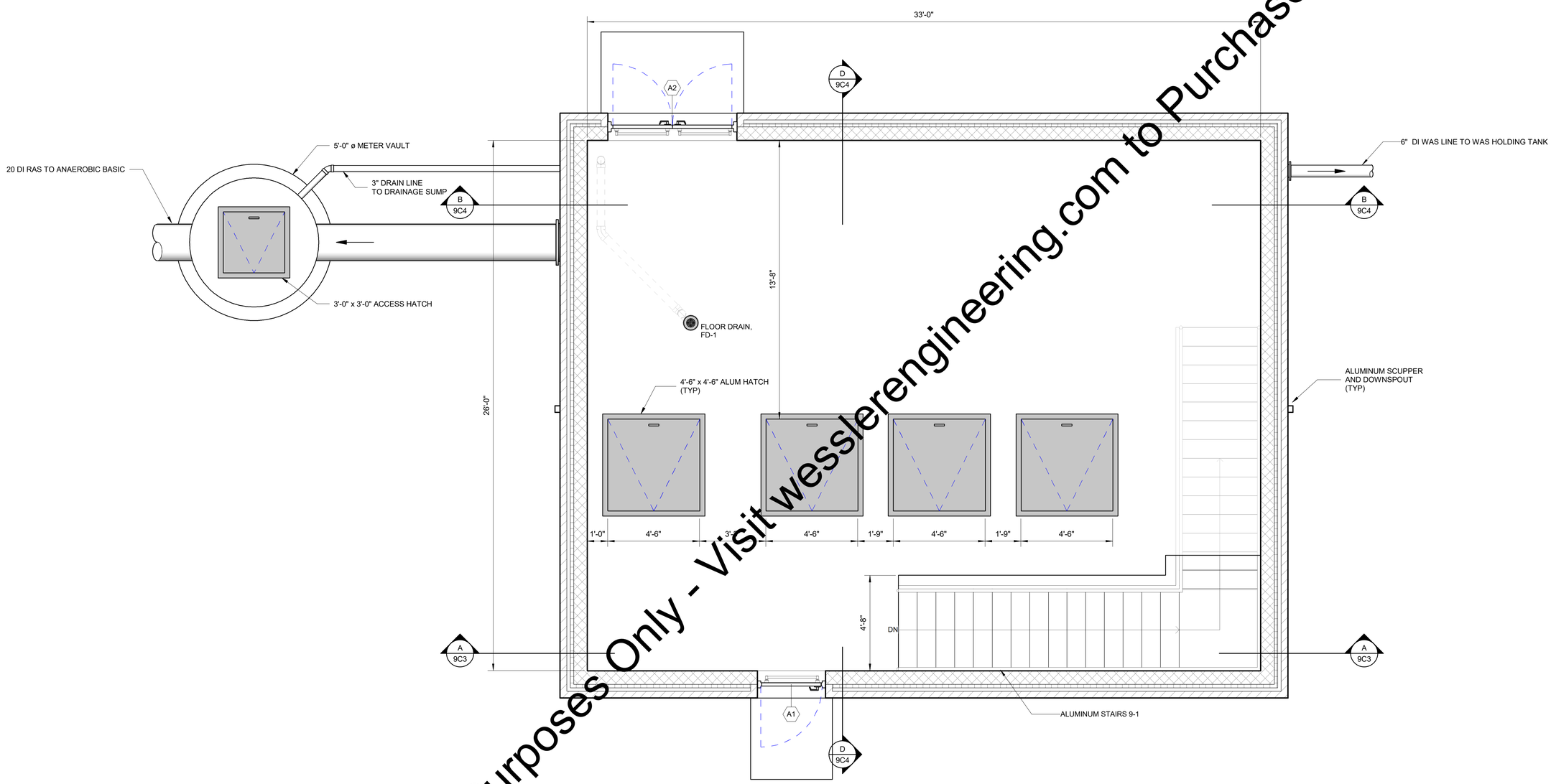

MAIN LEVEL PLAN

0 2 4 6 FT
3/8"=1'-0"

NOTE:

FLOOR DRAIN, FD-1: DUCO CAST IRON BODY WITH FLASHING COLLAR, ADJUSTABLE ROUND 12" NICKEL BRONZE TOP AND 4" BOTTOM OUTLET AS MANUFACTURED BY. J.R. SMITH, MODEL 2140, OR APPROVED EUQAL. PROVIDE TRAP IN SANITARY LINE.

"For Vewing Purposes Only - Visit wesslerengineering.com to Purchase"

SCALE VERIFICATION	DRAWN BY	JALN
BAR IS ONE INCH LONG ON ORIGINAL DRAWING	CHECKED BY	BRP
	APPROVED BY	RWH
	ISSUE DATE	MARCH 2020
	PROJECT NUMBER	193216-04-001

NO.	DATE	INITIALS	REVISION DESCRIPTION

ROBERT W. HOLDEN, II
REGISTERED
No. 10000096
STATE OF INDIANA
PROFESSIONAL ENGINEER
3/4/2020

WESSLER ENGINEERING
More than a Project™

WASTEWATER SYSTEM EXPANSION

CITY OF FRANKFORT, INDIANA
CONTRACT A - WASTEWATER TREATMENT PLANT

NEW SECONDARY CONTROL BUILDING
UPPER LEVEL PLAN

SHEET NO.
9C2

PAGE NO.
100

Plotted: 2/26/2020 10:30:35 AM C:\users\Jonathan\LDocuments\193216-New Secondary Control Bldg_CENTRAL - R19_Jonathan_LWE.rvt

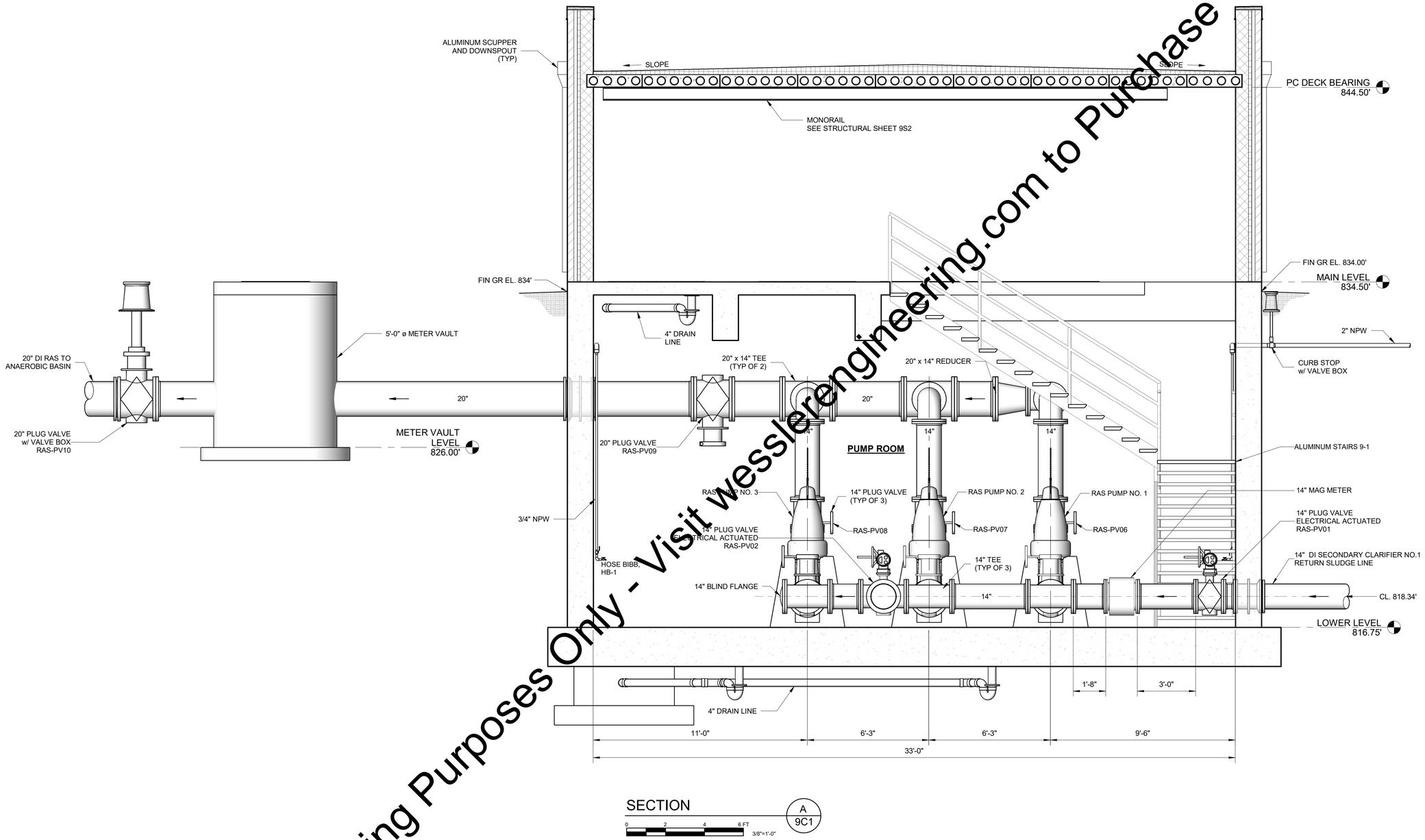

SECTION A 9C1

0 2 4 6 FT 3/8"=1'-0"

For Vewing Purposes Only - Visit wesslerengineering.com to Purchase"

SCALE VERIFICATION	DRAWN BY	MLN
BAR IS ONE INCH LONG ON ORIGINAL DRAWING	CHECKED BY	BRP
	APPROVED BY	RWH
	ISSUE DATE	MARCH 2020
	PROJECT NUMBER	193216-04-001

NO.	DATE	INITIALS	REVISION DESCRIPTION

ROBERT W. HOLDEN, II REGISTERED No. 10000096 STATE OF INDIANA PROFESSIONAL ENGINEER 3/4/2020

WESSLER ENGINEERING

More than a Project™

WASTEWATER SYSTEM EXPANSION

CITY OF FRANKFORT, INDIANA

CONTRACT A - WASTEWATER TREATMENT PLANT

NEW SECONDARY CONTROL BUILDING

SECTION

SHEET NO. **9C3**

PAGE NO. 101

Plotted: 2/26/2020 10:30:38 AM C:\users\Jonathan\Documents\193216-New Secondary Control Bldg_CENTRAL - R19_Jonathan_WE.rvt

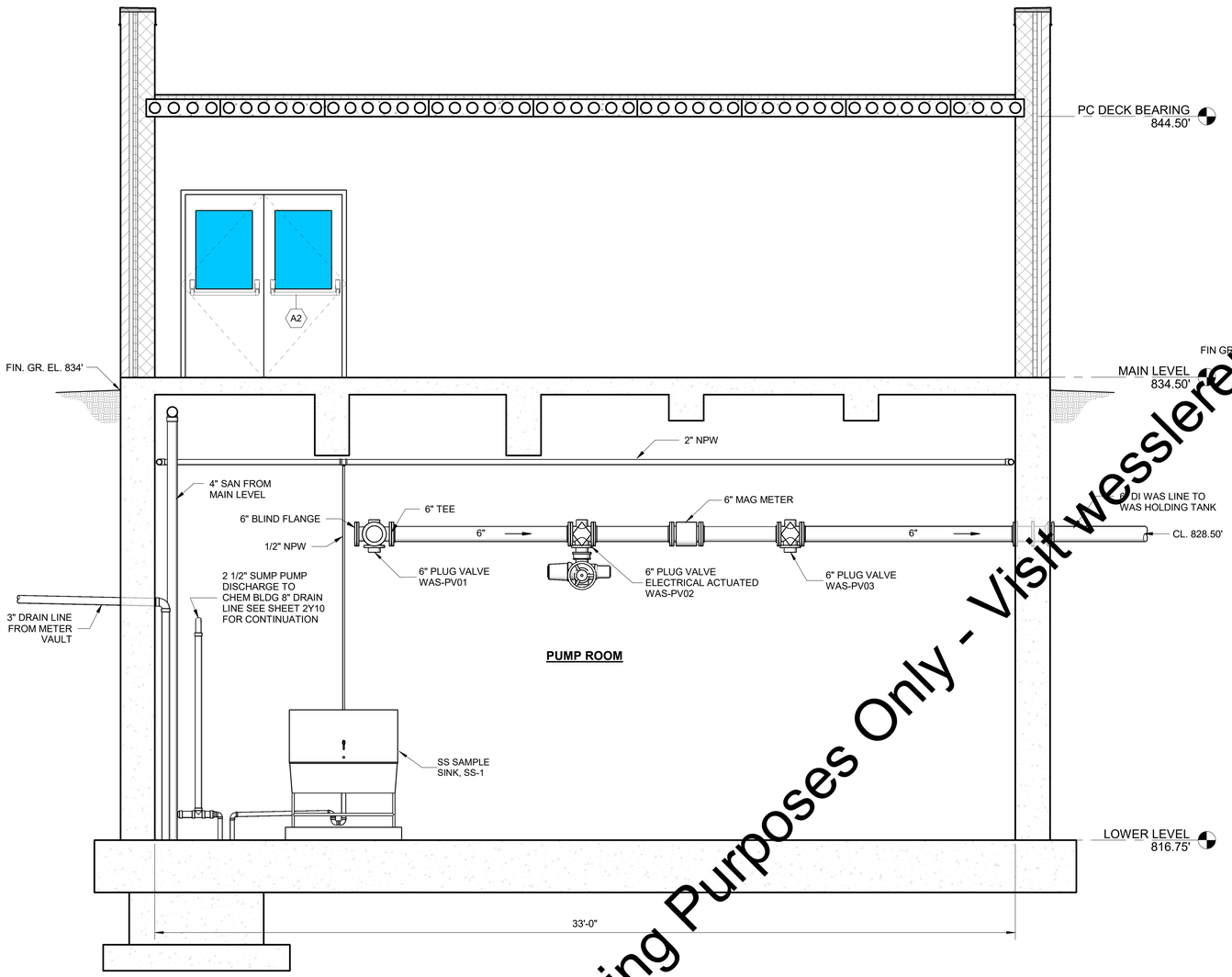

SECTION B 9C1

0 2 4 6 FT 3/8"=1'-0"

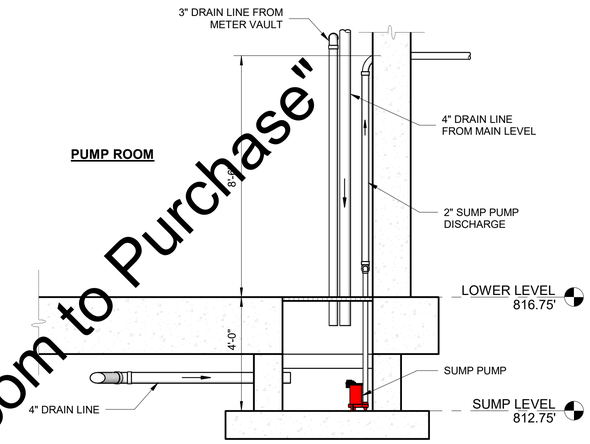

SECTION C 9C1

0 2 4 6 FT 3/8"=1'-0"

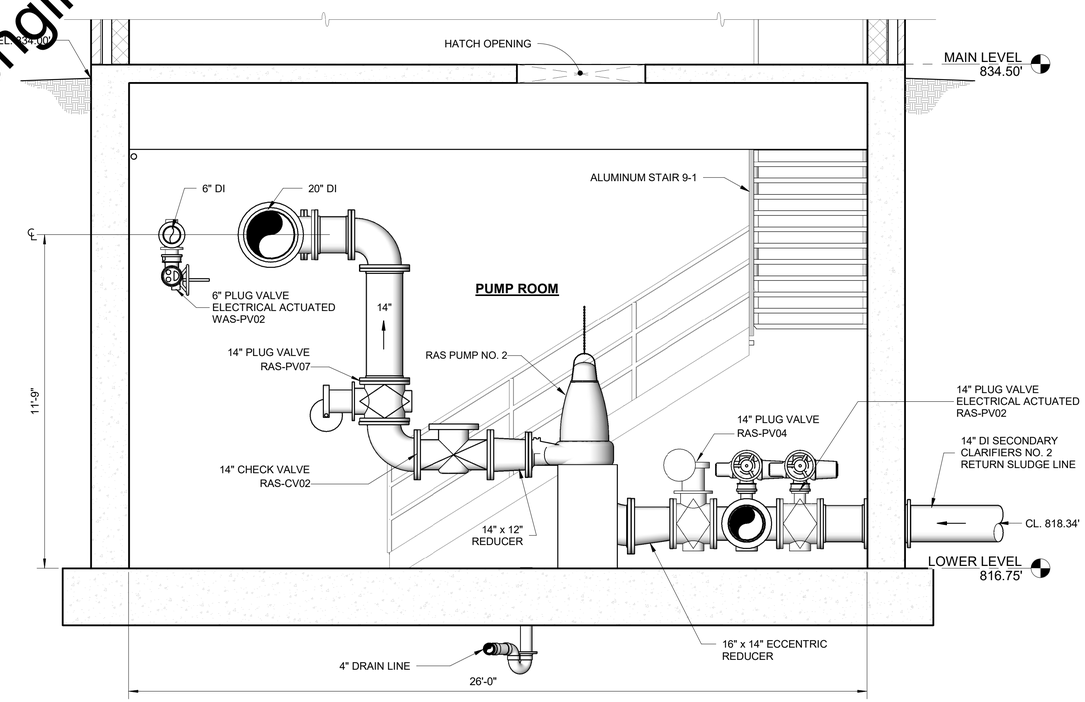

SECTION D 9C1

0 2 4 6 FT 3/8"=1'-0"

"For Viewing Purposes Only - Visit wesslerengineering.com to Purchase"

SCALE VERIFICATION	DRAWN BY	JLN
BAR IS ONE INCH LONG ON ORIGINAL DRAWING	CHECKED BY	BRP
	APPROVED BY	RWH
	ISSUE DATE	MARCH 2020
	PROJECT NUMBER	193216-04-001

NO.	DATE	INITIALS	REVISION DESCRIPTION

ROBERT W. HOLDEN II REGISTERED No. 10000096 STATE OF INDIANA PROFESSIONAL ENGINEER 3/4/2020

WESSLER ENGINEERING

More than a Project™

WASTEWATER SYSTEM EXPANSION

CITY OF FRANKFORT, INDIANA

CONTRACT A - WASTEWATER TREATMENT PLANT

NEW SECONDARY CONTROL BUILDING

SECTIONS

SHEET NO. **9C4**

PAGE NO. 102

Plotted: 2/26/2020 10:30:40 AM C:\users\JonathanL\Documents\193216-New Secondary Control Bldg_CENTRAL - R19_JonathanL_WE.rvt

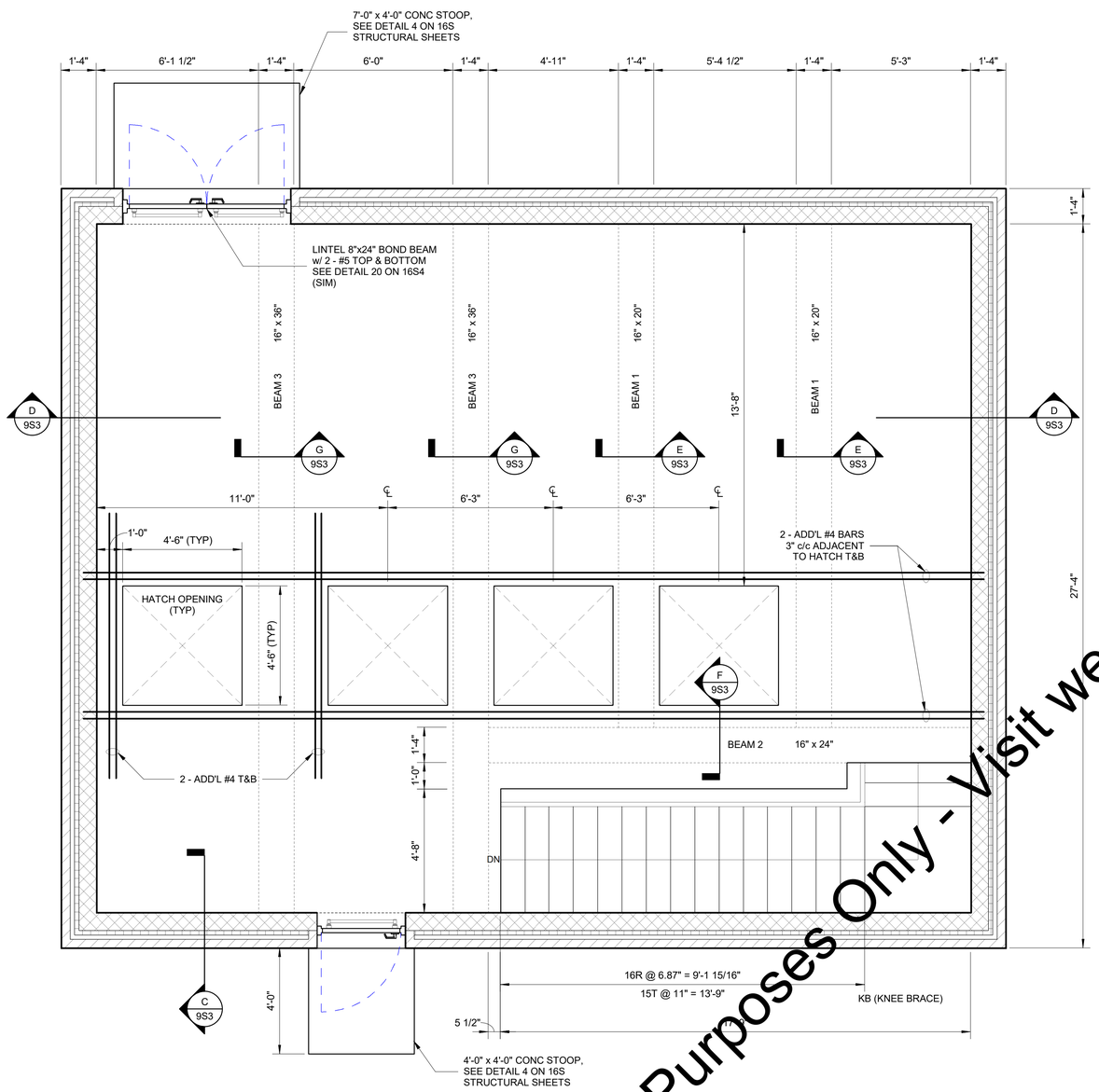

MAIN LEVEL FRAMING PLAN

0 2 6 FT 3/8"=1'-0"

FLOOR LIVE LOAD 40 PSF
SEISMIC SHEAR V = 9.3K

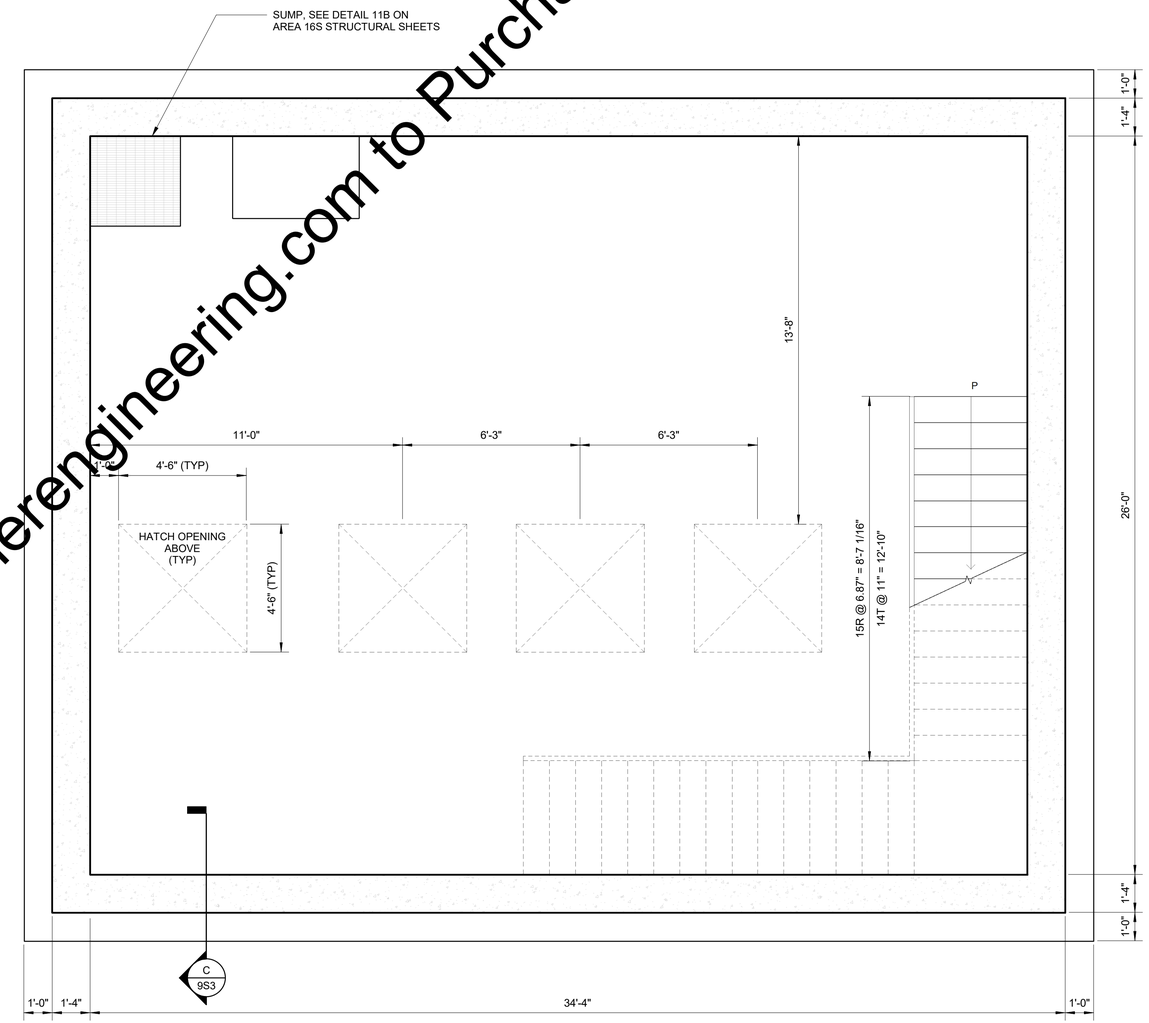

FOUNDATION PLAN

0 2 4 6 FT 3/8"=1'-0"

FOR STRUCTURAL GENERAL NOTES SEE 1S1.
FOR STANDARD DETAILS SEE AREA 16S SHEETS.

"For Viewing Purposes Only - Visit wesslerengineering.com to Purchase"

SCALE VERIFICATION	DRAWN BY	JB
BAR IS ONE INCH LONG ON ORIGINAL DRAWING	CHECKED BY	KNW
	APPROVED BY	JRB
	ISSUE DATE	MARCH 2020
	PROJECT NUMBER	193216-04-001

NO.	DATE	INITIALS	REVISION DESCRIPTION

JEFFREY ROSS BALLARD REGISTERED No. 60860191 STATE OF INDIANA PROFESSIONAL ENGINEER 3/4/2020

WESSLER ENGINEERING
More than a Project™

WASTEWATER SYSTEM EXPANSION
CITY OF FRANKFORT, INDIANA
CONTRACT A - WASTEWATER TREATMENT PLANT

NEW SECONDARY CONTROL BUILDING PLANS

SHEET NO. **9S1**

PAGE NO. 103

Plotted: 2/26/2020 10:30:46 AM C:\users\Jonathan\Documents\193216-New Secondary Control Bldg_CENTRAL - R19_JonathanL_WE.rvt

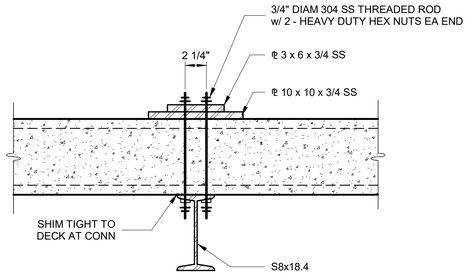

MONORAIL DETAIL (A / 9S2)

0 1/2 1 1 1/2 FT — 1 1/2"=1'-0"

SERVICE LOAD PER CONNECTION = 4.5k

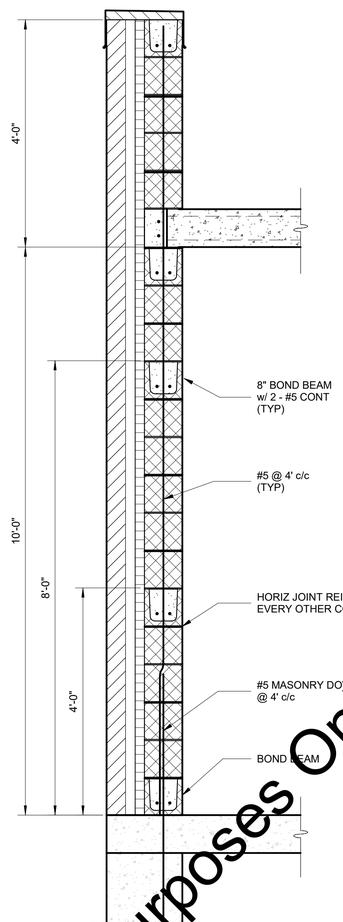

TYP WALL SECTION (B / 9S2)

0 1 2 3 FT — 3/4"=1'-0"

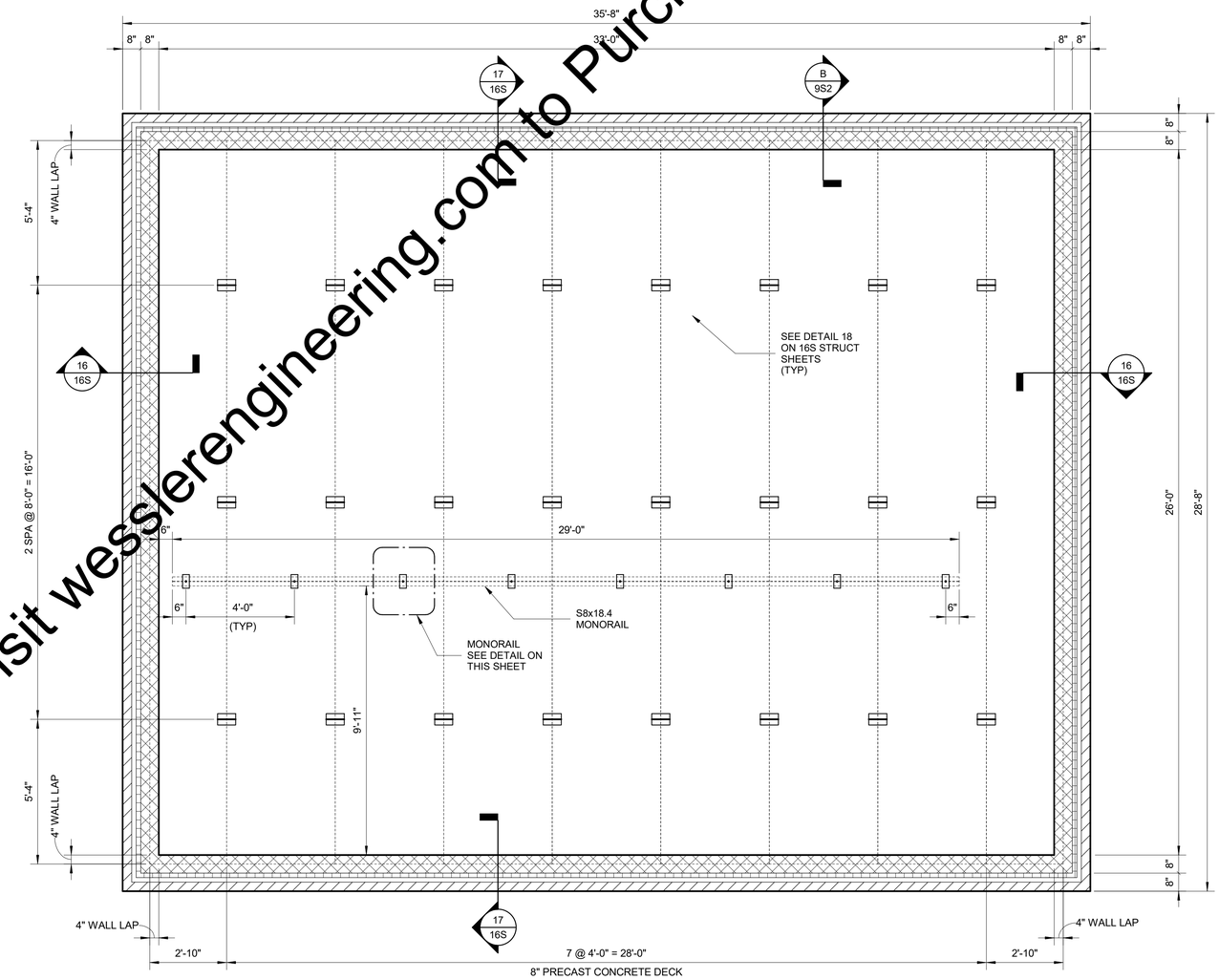

ROOF FRAMING PLAN

0 2 4 6 FT — 3/8"=1'-0"

FOR STRUCTURAL GENERAL NOTES SEE 1S1.
FOR STANDARD DETAILS SEE AREA 16S SHEETS.

"For Vewing Purposes Only - Visit wesslerengineering.com to Purchase"

SCALE VERIFICATION	DRAWN BY	JB
BAR IS ONE INCH LONG ON ORIGINAL DRAWING	CHECKED BY	KNW
	APPROVED BY	JRB
	ISSUE DATE	MARCH 2020
	PROJECT NUMBER	193216-04-001

NO.	DATE	INITIALS	REVISION DESCRIPTION

JEFFREY ROSS BALLARD — REGISTERED No. 60860191 — STATE OF INDIANA — PROFESSIONAL ENGINEER — 3/4/2020

WESSLER ENGINEERING
More than a Project™

WASTEWATER SYSTEM EXPANSION
CITY OF FRANKFORT, INDIANA
CONTRACT A - WASTEWATER TREATMENT PLANT

NEW SECONDARY CONTROL BUILDING
ROOF PLAN

SHEET NO. **9S2**

PAGE NO. 104

Plotted: 2/26/2020 10:30:46 AM C:\Users\Jonathan\Documents\193216-New Secondary Control Bldg_CENTRAL - R19_Jonathan_WE.rvt

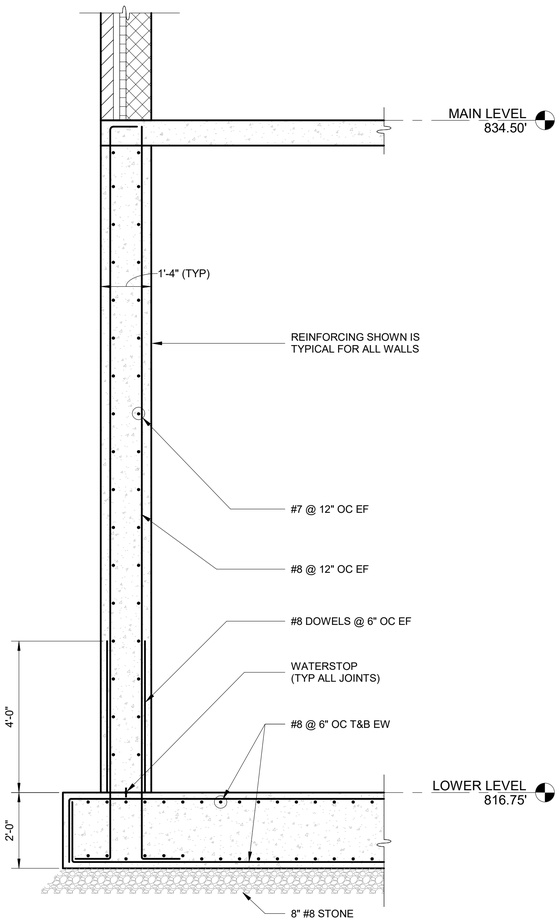

SECTION C 9S1

0 1 2 4 FT 1/2"=1'-0"

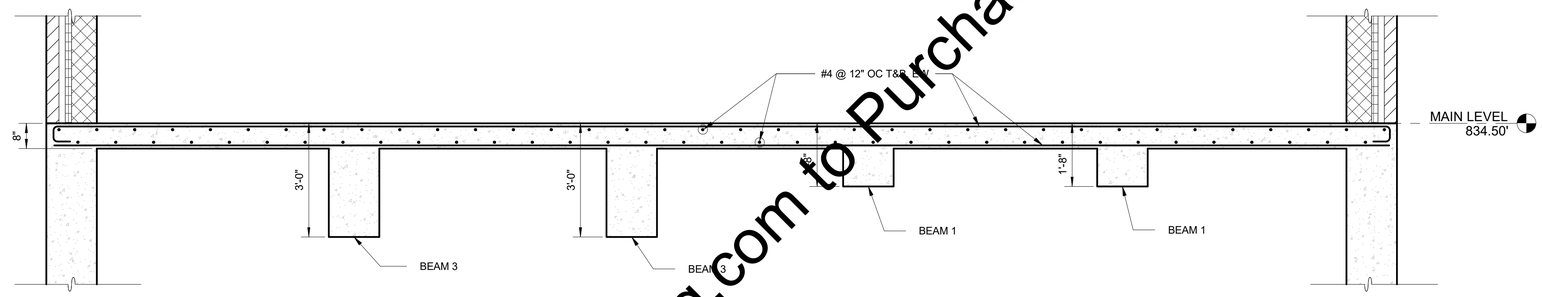

SECTION D 9S1

0 1 2 4 FT 1/2"=1'-0"

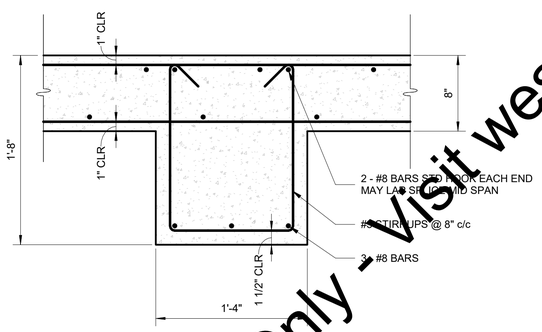

SECTION - BEAM 1 E 9S1

0 1/2 1 1 1/2 FT 1 1/2"=1'-0"

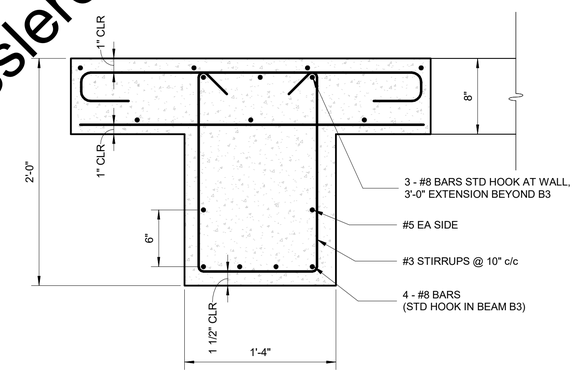

SECTION - BEAM 2 F 9S1

0 1/2 1 1 1/2 FT 1 1/2"=1'-0"

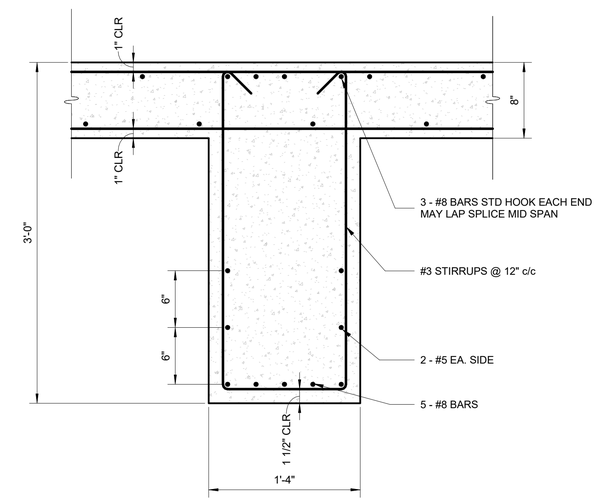

SECTION - BEAM 3 G 9S1

0 1/2 1 1 1/2 FT 1 1/2"=1'-0"

FOR STRUCTURAL GENERAL NOTES SEE 1S1.
FOR STANDARD DETAILS SEE AREA 16S SHEETS.

SCALE VERIFICATION	DRAWN BY	JB
BAR IS ONE INCH LONG ON ORIGINAL DRAWING	CHECKED BY	KNW
	APPROVED BY	JRB
	ISSUE DATE	MARCH 2020
	PROJECT NUMBER	193216-04-001

NO.	DATE	INITIALS	REVISION DESCRIPTION

JEFFREY ROSS BALLARD REGISTERED No. 60860191 STATE OF INDIANA PROFESSIONAL ENGINEER 3/4/2020

WESSLER ENGINEERING
More than a Project™

WASTEWATER SYSTEM EXPANSION
CITY OF FRANKFORT, INDIANA
CONTRACT A - WASTEWATER TREATMENT PLANT

NEW SECONDARY CONTROL BUILDING
SECTIONS

SHEET NO. **9S3**
PAGE NO. 105

"For Vewing Purposes Only - Visit wesslerengineering.com to Purchase"

Plotted: 2/26/2020 10:30:47 AM C:\Users\Jonathan\Documents\193216-New Secondary Control Bldg_CENTRAL - R19_Jonathan_WE.rvt

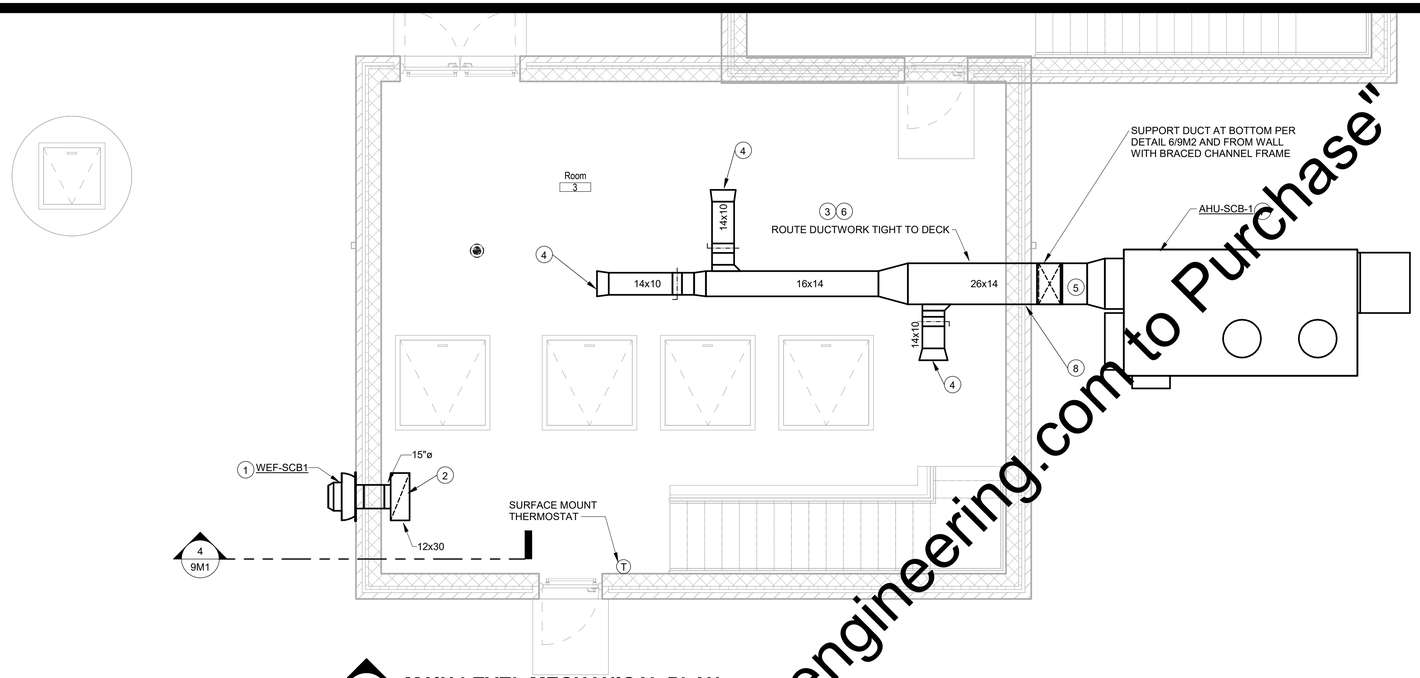

MAIN LEVEL MECHANICAL PLAN
Scale: 1/4" = 1'-0"

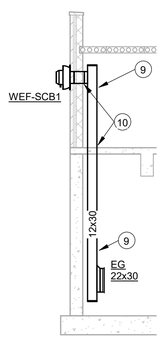

4 Ductwork Section
Scale: 1/8" = 1'-0"

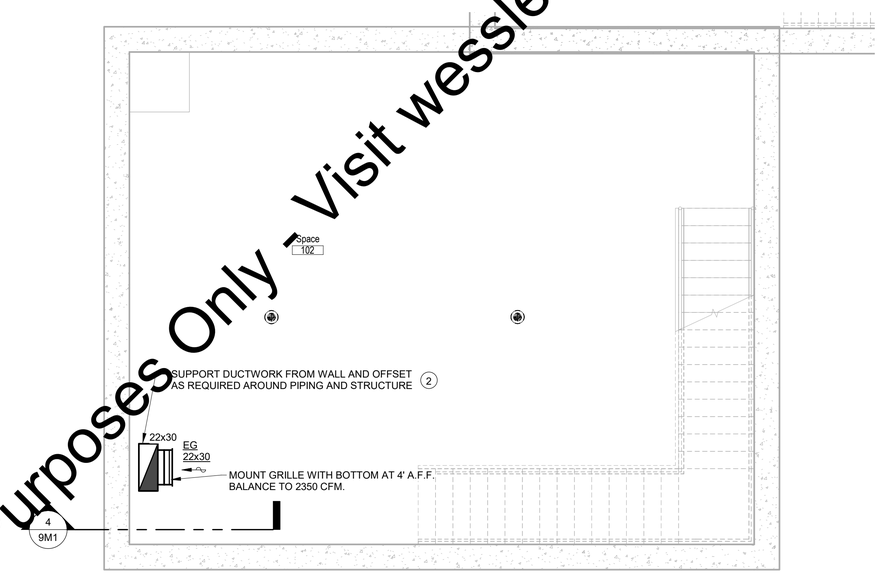

LOWER LEVEL MECHANICAL PLAN
Scale: 1/4" = 1'-0"

GENERAL NOTES:

1. ALL WORK MUST COMPLY WITH CURRENT MECHANICAL CODE.
2. RIGID AND FLEXIBLE DUCTWORK FABRICATION SHALL CONFORM TO THE LATEST EDITION OF SMACNA "HVAC DUCT CONSTRUCTION STANDARDS".
3. DUCTWORK SHALL BE CONSTRUCTED TO THE FOLLOWING CLASSES:
   a. SUPPLY: PRESSURE 0-4"WC, LEAK CLASS A, VELOCITY <4000 FPM
   b. RETURN AND EXHAUST: PRESSURE -1 TO +1" WC, LEAK CLASS C, VELOCITY <2000 FPM
4. INSULATE ALL SUPPLY AIR DUCTWORK WITH 1 1/2" RIGID FIBERGLASS WITH FSK JACKET. SEAL ALL JOINTS, SEAMS, AND ENDS. PREPARE FOR PAINTING AND PAINT WITH EPOXY PAINT WITH COLOR SELECTED BY ARCHITECT
5. NEW AIR SYSTEMS WITHIN PROJECT AREA TO BE TESTED, ADJUSTED, AND BALANCED BY LICENSED TAB AGENCY.
6. CONTRACTOR TO COORDINATE WITH ALL TRADES TO INSTALL AND MAINTAIN SYSTEMS WITH CLEARANCE FOR SERVICE AND MAINTENANCE.
7. REPORT DISCREPANCIES BETWEEN DRAWINGS AND EXISTING CONDITIONS TO ENGINEER PRIOR TO FABRICATING ANY DUCTWORK, PIPING, OR MECHANICAL ASSEMBLIES.
8. PROVIDE BALANCING DEVICES IN ALL BRANCH DUCTWORK OF SYSTEMS WITH MORE THAN ONE OUTLET/INLET.
9. PROPERLY SUSPEND ALL EQUIPMENT, DUCTWORK, PIPING, DEVICES, TRANSFER DUCTS, ETC FROM STRUCTURE.
10. CONTRACTOR SHALL FOLLOW ALL OF THE OWNER'S SAFETY PROTOCOLS AND GUIDELINES.
11. ALL DUCTWORK, PLENUMS, UNIT CASINGS STRUCTURE TO BE 316 STAINLESS CONSTRUCTION WITH 316 STAINLESS HARDWARE. ALL COILS, FANS, AND OPERATING SURFACES EXPOSED TO AIRSTREAM OR ENVORONMENT (INCLUDING CONDENSER COILS AND FANS) TO BE COATED WITH HERESITE OR PRIOR APPROVED EQUIVALENT COATING WITH DIRECT TESTING IN AMMONIA AND HYDROGEN SULFIDE ENVIRONMENTS. ALL DUCT ACCESSORIES, HARDWARE AND SUPPORTS TO BE CONSTRUCTED AS LISTED ABOVE OR SHALL BE PRIMED AND PAINTED WITH MIN. TWO COATS ZINK RICH EPOXY COATING.

PLAN NOTES:

1 COORDINATE WITH STRUCTURAL DRAWINGS FOR EXACT MOUNTNG HEIGHT OF EXHAUST FAN.
2 SUPPORT DUCTWORK FROM WALL. SUPPORTS TO BE PRIMED AND PAINTED WITH ZINC RICH EPOXY PAINT. HARDWARE TO BE 316 STAINLESS STEEL.
3 COORDINATE DUCT INSTALLATION WITH ALL TRADES TO AVOID ROUTING OVER SWITCHGEAR MAINTAIN SERVICE CLEARANCE TO ALL EQUIPMENT, AREAWAYS, AND HOISTWAYS.
4 TRANISITION TO 18x14 AND TERMINATE WITH DOUBLE DEFLECTION STAINLESS STEEL GRILLE.
5 INSULATE EXTERIOR DUCTWORK WITH 2" RIGID POLYISO INSULATION WITH ALUMINUM JACKET - SEE DETAIL 5/9M2
6 INSULATE INTERIOR SUPPLY DUCTWORK WITH 1 1/2" RIGID FIBERGLASS WITH FSK JACKET.
7 UNIT MOUNTED ON CONCRETE PAD WITH TOP SLIGHTLY SLOPED TO SHED WATER. TOP OF PAD MIN. 6" ABOVE FINISHED GRADE
8 REFER TO DETAIL 4/9M2 FOR THROUGH WALL DUCT PENETRATION.
9 SUPPORT DUCTWORK FROM WALL. SUPPORTS TO BE PRIMED AND PAINTED WITH ZINC RICH EPOXY PAINT. HARDWARE TO BE 316 STAINLESS STEEL.
10 INSULATE EXHAUST DUCT FROM WALL PENETRATION DOWN TO FLOOR OF MAIN LEVEL. 1 1/2" RIGID FIBERGLASS WITH ALUMINUM JACKET.

"For Vewing Purposes Only - Visit wesslerengineering.com to Purchase"

Applied Engineering Services
5975 Castle Creek Parkway N Drive, Suite 300 • Indianapolis, Indiana 46250
Tel: 317.810.4141 • Fax: 317.810.4140 • www.applied-e-s.com

SCALE VERIFICATION
BAR IS ONE INCH LONG ON ORIGINAL DRAWING

DRAWN BY	DAM
CHECKED BY	DTM
APPROVED BY	DTM
ISSUE DATE	MARCH 2020
PROJECT NUMBER	193216-04-001

NO.	DATE	INITIALS	REVISION DESCRIPTION

DANIEL THOMAS MILES REGISTERED No. PE10302029 STATE OF INDIANA PROFESSIONAL ENGINEER 02/04/2020

WESSLER ENGINEERING
More than a Project™

WASTEWATER SYSTEM EXPANSION
CITY OF FRANKFORT, INDIANA
CONTRACT A - WASTEWATER TREATMENT PLANT

SECONDARY CONTROL BUILDING MECHANICAL PLANS

SHEET NO. 9M1
PAGE NO. 106

ORIGINAL SHEET SIZE IS 22"x34" (ANSI D)
2/28/2020 1:57:09 PM AESI Proj. No: 19-141
0 1/2" 1" 2"

PACKAGED ROOFTOP UNIT SCHEDULE

TAG NO.	AREA SERVED	TYPE	DX COOLING COIL											ELEC HEAT SECTION					FAN									COMPRESSOR/CONDENSER							FILTERS			ELECTRICAL DATA				MFG.	MODEL #	WGT. LBS.	REMARKS
			CFM	OA CFM	TOTAL MBH	SEN. MBH	EADB	EAWB	LADB	LAWB	REFRIG. TYPE	SUCT. TEMP.	MAX. FACE VEL.	MBH	KW	TEMP RISE	VOLTS/PH	MIN STEPS	FAN TYPE	DRIVE	NO. OF FANS	TOTAL SP	EXTERNAL SP	FAN RPM	WHEEL DIA.	MOTOR HP	MOTOR RPM	VOLT/PH	MIN. NO OF COMP	COMPRESSOR TYPE	MIN. STEPS OF UNLOADING	NO OF CONDENSER FANS	FAN TYPE	FAN HP EACH	DESIGN AMBIENT TEMP.	NO.	TYPE	SIZE	MCA	MOP	EM POWER	CONTROL TYPE				
AHU-SCB-1	SECONDARY CONTROL	PACKAGED RTU HEATING/COOLING	2100	2100	160	86	95.0	78.0	58.0	57.0	410A	44.5	490	262	77.0	115	460/3	SCR	PLENUM	DIRECT	1	3.1	1.25	2245	15	2.0	1800	460/3	1	SCROLL	MOD	2	RADIAL	1.0	115	2	PLEATED MERV 8	16x20	156	175		INTEGRAL DDC	INNOVENT	CAHU-2100	4000	1,2,3,4

NOTES:
1. 316 STAINLESS STEEL CONSTRUCTION INCLUDING HARDWARE, SUPPORTS, ACCESSORIES, ETC. 2" DOUBLE WALL INSULATED CABINET INCLUDING FLOOR AND ROOF, WELDED 316 STAINLESS STEEL STRUCTURAL BASE, FANS AND COIIS INCLUDING CONDENSER TO HAVE BAKED EPOXY CORROSION RESISTANT COATING.
2. PROVIDE UNIT MOUNTED VFD WITH UNIT. FAN MOTORS TO HAVE GROUNDING RINGS.
3. PROVIDE SELF CONTAINED CONTROLLER WITH SEQUENCES FOR CONTINUOUS FAN OPERATION, COOLING, HEATING, AND DEHUMIDIFICATION BASED ON SPACE MOUNTED THERMOSTAT AND UNIT MOUNTED HUMIDISTAT. CONTROL FOR DISCHARGE HUMIDITY BELOW 60%.
4. UNIT MOUNTED ON CONCRETE PAD AT GRADE.

RETURN AND EXHAUST GRILLE SCHEDULE

TAG NO.	NOMINAL FACE SIZE (IN.)	MIN. CORE AREA (SQ. FT.)	BRANCH DUCT SIZE TO GRILLE (IN.)	CFM RANGE	MAX. NC LEVEL	MAX. CORE VELOCITY (FPM)	MAX. VELOCITY PRESSURE (IN. W.C.)	MAX. TOTAL PRESSURE (IN. W. C.)	MFR.	MODEL NO.	REMARKS
SG	20X20	2.57	PER PLANS	1000-1200	18	500	0.016	0.04	TITUS	301FL	1,3
EG	20X20	2.57	PER PLANS	1000-1500	15	500	0.016	0.040	TITUS	350ZFL	3

NOTES:
1. DUAL DEFLECTION 3/4" BLADE SPACING.
2. ALUMINUM CONSTRUCTION BAKED ENAMAL PAINT - WHITE.
3. 316 STAINLESS CONSTRUCTION AND HARDWARE.

EXHAUST FANS

TAG NO.	AREA SERVED	FAN					SOUND POWER LEVELS (OCTAVE BAND)								MOTOR				DISCONNECT		CONTROL	WEIGHT	BASIS OF DESIGN		NOTES
		FAN TYPE	CFM	STATIC PRESSURE (IN. W. C.)	SPEED (RPM)	DRIVE	1	2	3	4	6	7	8	SOUND LEVEL (LwA) INLET	HP	VOLTS	PHASE	EM POWER	PROVIDED BY	LOCATION			MFG.	MODEL #	
WEF-SCB1	GENERAL	WALL MTD	2350	0.75	1725	DIRECT	70	65	82	74	69	50	61	59	78	1.5	480	3		MFGR	ON FAN	C	100	GREENHECK	CUE-141-A	1,2

NOTES:
1. FAN TO RUN CONTINUOUSLY.
2. FAN WHEEL TO BE NON-SPARKING CONSTRUCTION. FAN AND HOUSING TO BE HERESITE OR HI-PROCESS ESSEX COATED FOR CORROSION RESISTANCE.

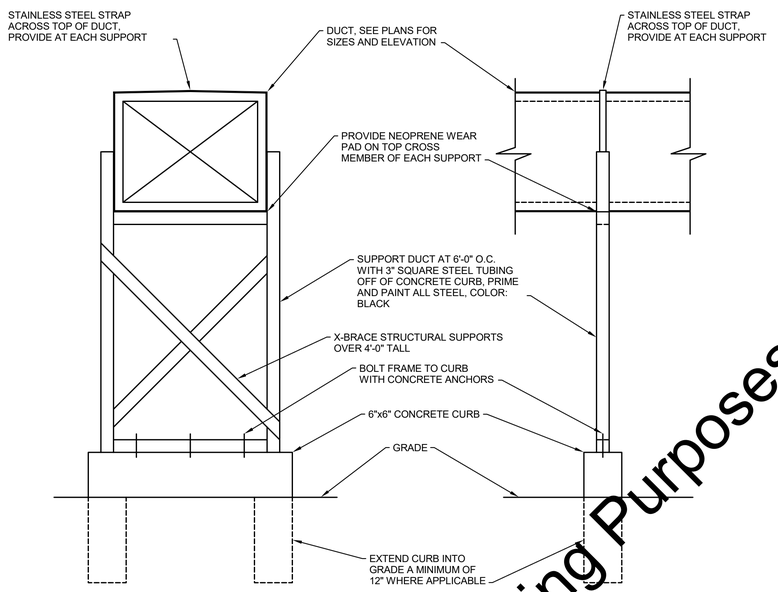

6 **EXTERIOR DUCT SUPPORT DETAIL**
Scale: 12" = 1'-0"

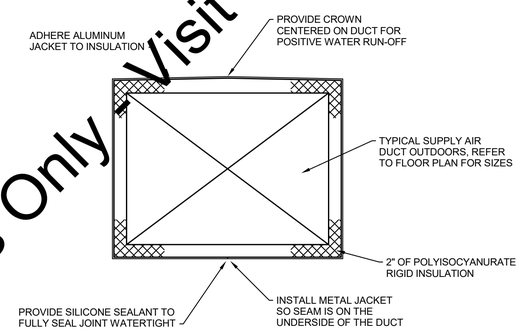

NOTES:
1. OVERLAP ALL HORIZONTAL JOINTS A MINIMUM OF 2" AND SEAL WATERTIGHT.

5 **EXTERIOR DUCT INSULATION DETAIL**
Scale: 12" = 1'-0"

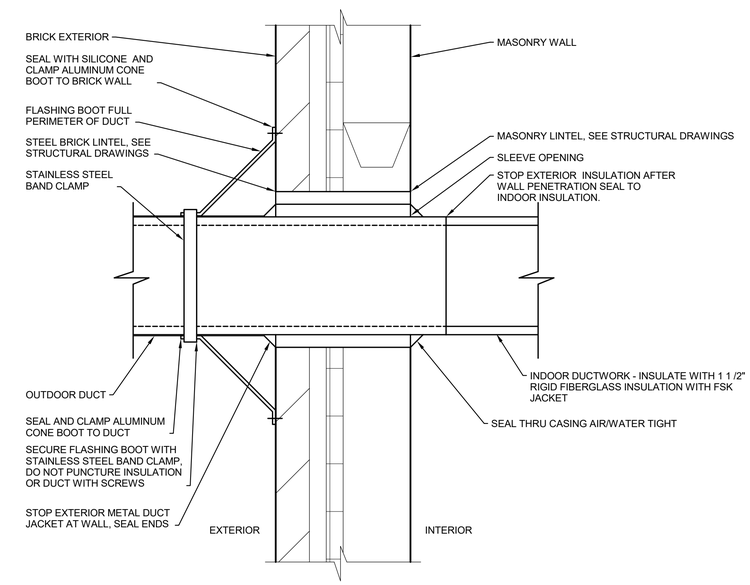

4 **DUCT THROUGH WALL PENETRATION DETAIL**
Scale: 12" = 1'-0"

For Viewing Purposes Only - Visit wesslerengineering.com to Purchase"

0 1/2" 1" 2"

ORIGINAL SHEET SIZE IS 22"x34" (ANSI D)
2/28/2020 1:57:14 PM AESI Proj. No: 19-141

Applied Engineering Services
5975 Castle Creek Parkway N Drive, Suite 300 • Indianapolis, Indiana 46250
Tel: 317.810.4141 • Fax: 317.810.4140 • www.applied-e-s.com

SCALE VERIFICATION
BAR IS ONE INCH LONG ON ORIGINAL DRAWING

DRAWN BY	DAM
CHECKED BY	DTM
APPROVED BY	DTM
ISSUE DATE	MARCH 2020
PROJECT NUMBER	193216-04-001

NO.	DATE	INITIALS	REVISION DESCRIPTION

DANIEL THOMAS MILLS REGISTERED No. PE10302029 STATE OF INDIANA PROFESSIONAL ENGINEER 03/04/2020

WESSLER ENGINEERING
More than a Project™

WASTEWATER SYSTEM EXPANSION
CITY OF FRANKFORT, INDIANA
CONTRACT A - WASTEWATER TREATMENT PLANT

SECONDARY CONTROL BUILDING
MECHANICAL DETAILS AND SCHEDULES

SHEET NO. **9M2**

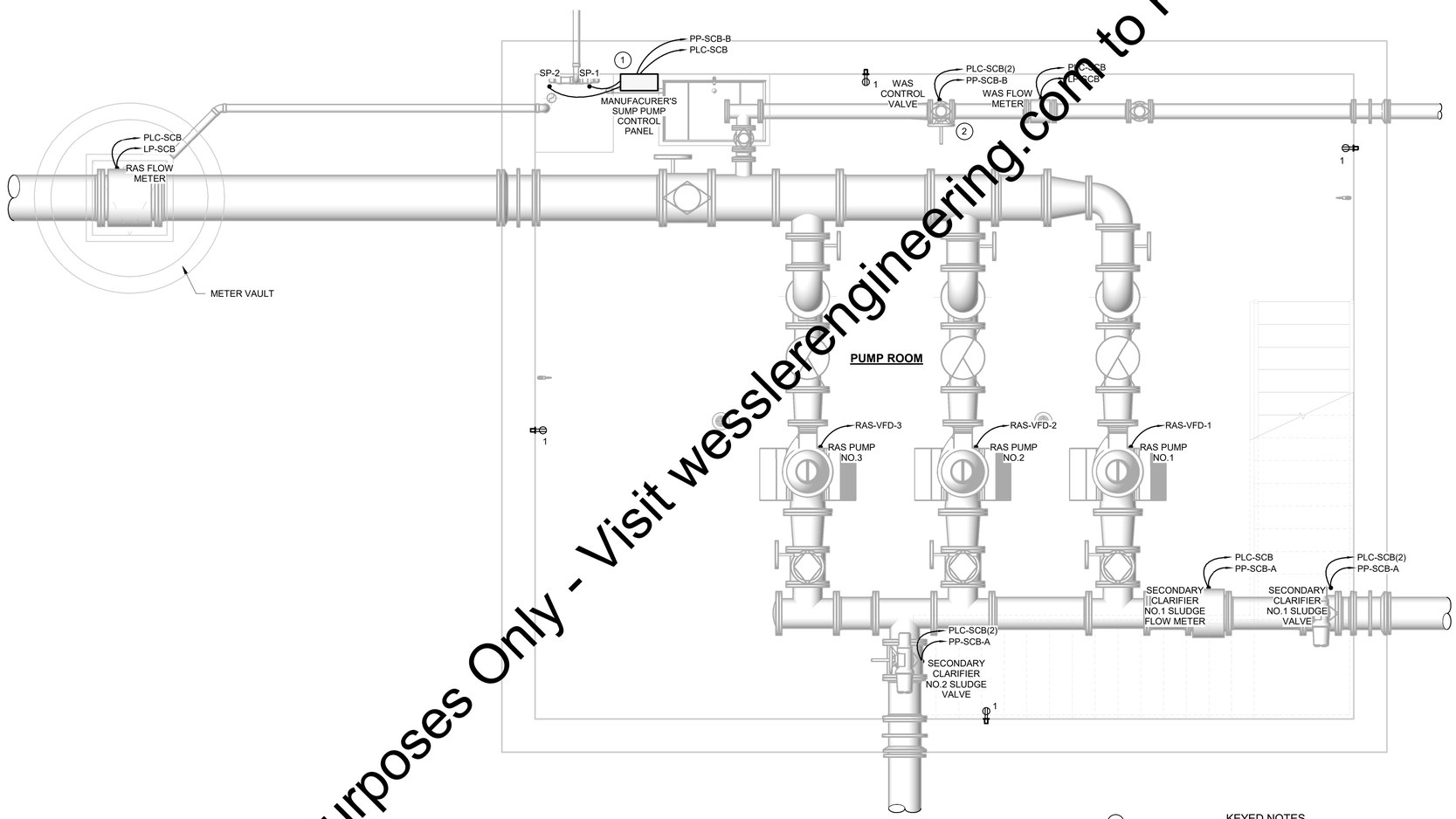

LOWER LEVEL POWER PLAN

0 2 4 6 FT
3/8"=1'-0"

(#) KEYED NOTES

1 CONNECT PUMPS AND CONTROLS PER MANUFACTURER REQUIREMENTS.
2 MOUNT REMOTE CONTROL STATION ON WALL BELOW ACTUATOR. 3/4"C, MANUFACTURER CABLE.

"For Vewing Purposes Only - Visit wesslerengineering.com to Purchase"

SCALE VERIFICATION	DRAWN BY	EAS
BAR IS ONE INCH LONG ON ORIGINAL DRAWING	CHECKED BY	BRP
	APPROVED BY	WCM
	ISSUE DATE	MARCH 2020
	PROJECT NUMBER	193216-04-001

NO.	DATE	INITIALS	REVISION DESCRIPTION

WAYNE C. MOORE REGISTERED No. 10707476 STATE OF INDIANA PROFESSIONAL ENGINEER 3/4/2020

WESSLER ENGINEERING
More than a Project™

WASTEWATER SYSTEM EXPANSION
FRANKFORT UTILITIES
FRANKFORT, INDIANA

NEW SECONDARY CONTROL BUILDING - LOWER LEVEL POWER PLAN

SHEET NO. **9E1**
PAGE NO. 108

Plotted: 3/5/2020 9:49:55 AM J:\Frankfort\Projects\193216 Frankfort WWTP Exp\CAD 04-001\Revit\Models\193216-EL-New Secondary Control Bldg - R19.rvt

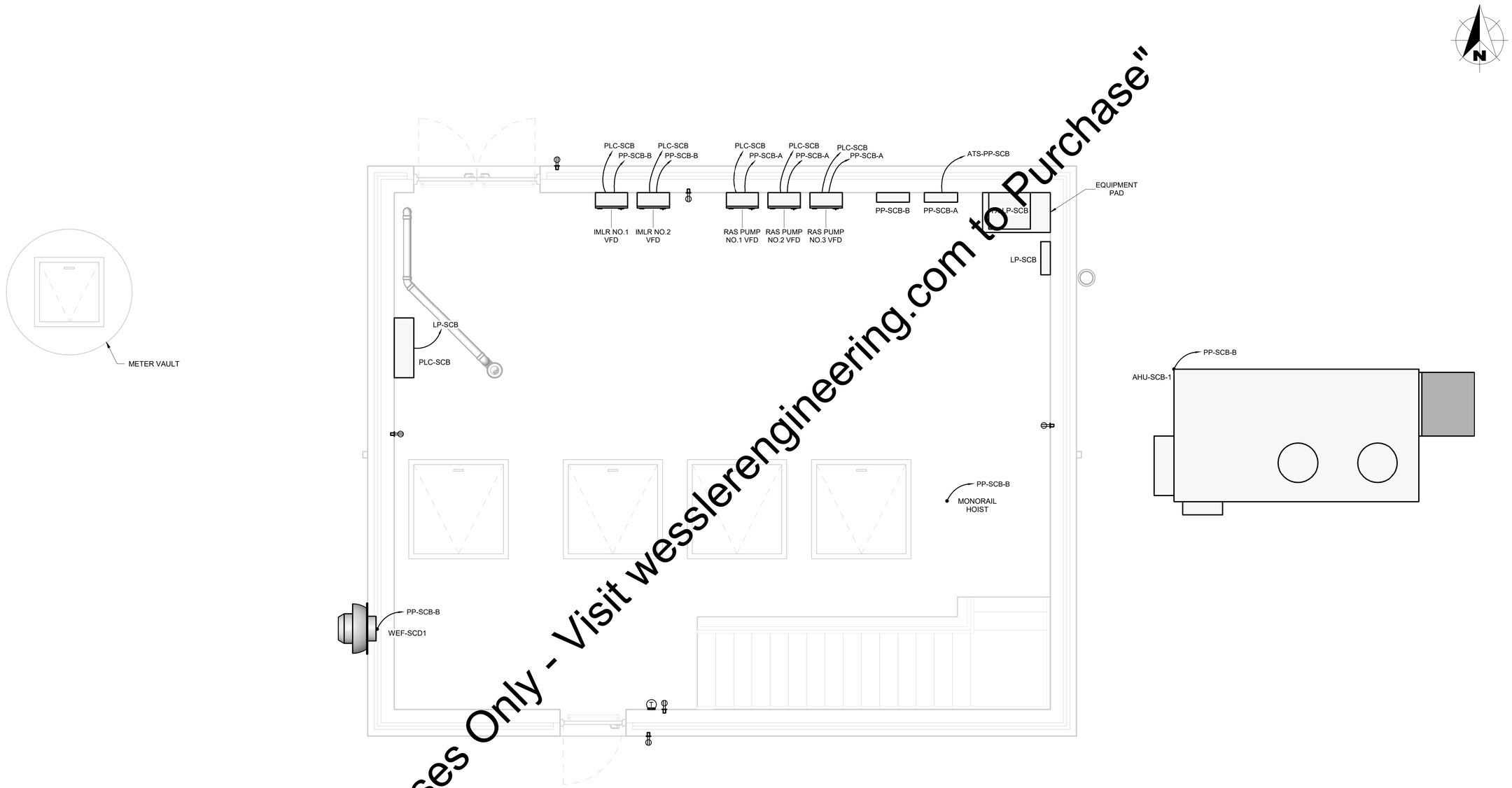

UPPER LEVEL POWER PLAN

0 2 4 6 FT
3/8"=1'-0"

"For Vewing Purposes Only - Visit wesslerengineering.com to Purchase"

SCALE VERIFICATION	DRAWN BY	EAS
BAR IS ONE INCH LONG ON ORIGINAL DRAWING	CHECKED BY	WCM
	APPROVED BY	WCM
	ISSUE DATE	MARCH 2020
	PROJECT NUMBER	193216-04-001

NO.	DATE	INITIALS	REVISION DESCRIPTION

WAYNE C. MOORE REGISTERED No. 10707476 STATE OF INDIANA PROFESSIONAL ENGINEER 3/4/2020

WESSLER ENGINEERING
More than a Project™

WASTEWATER SYSTEM EXPANSION
FRANKFORT UTILITIES
FRANKFORT, INDIANA

NEW SECONDARY CONTROL BUILDING - UPPER LEVEL POWER PLAN

SHEET NO. **9E2**

PAGE NO. 109

J:\Frankfort\Projects\193216 Frankfort WWTP Exp\CAD 04-001\Revit\Models\193216-EL-New Secondary Control Bldg - R19.rvt
Plotted: 3/5/2020 9:49:58 AM

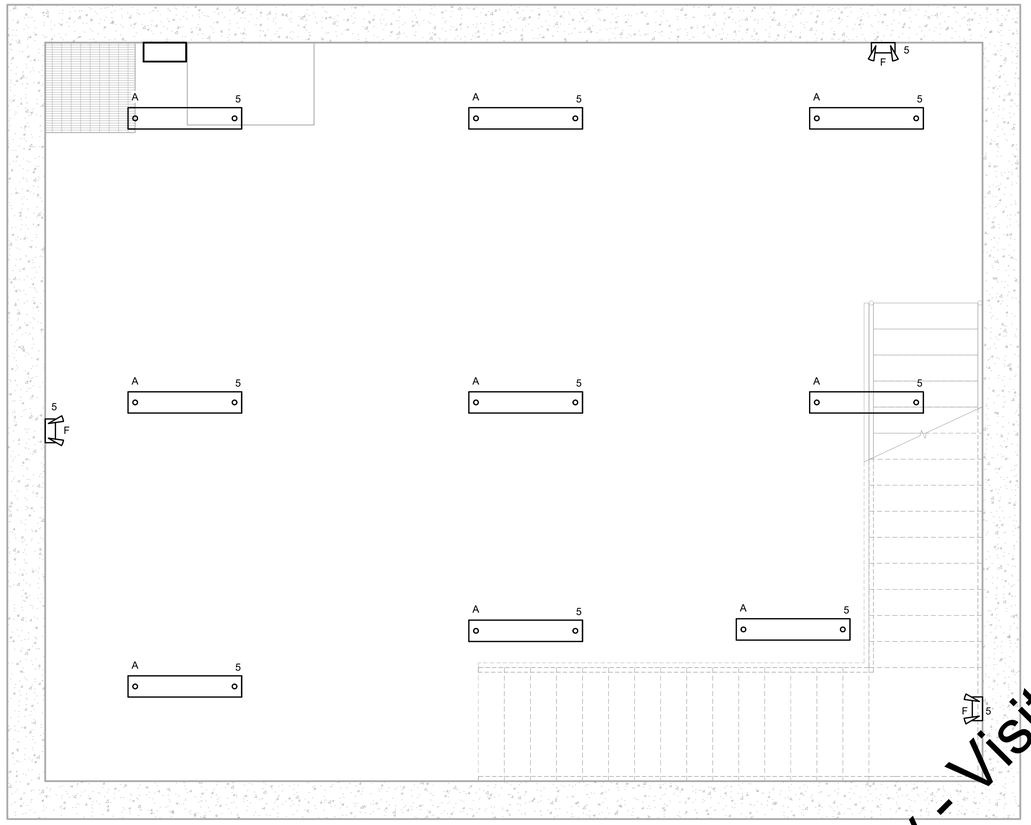

LOWER LEVEL LIGHTING PLAN

0 2 4 6 FT 3/8"=1'-0"

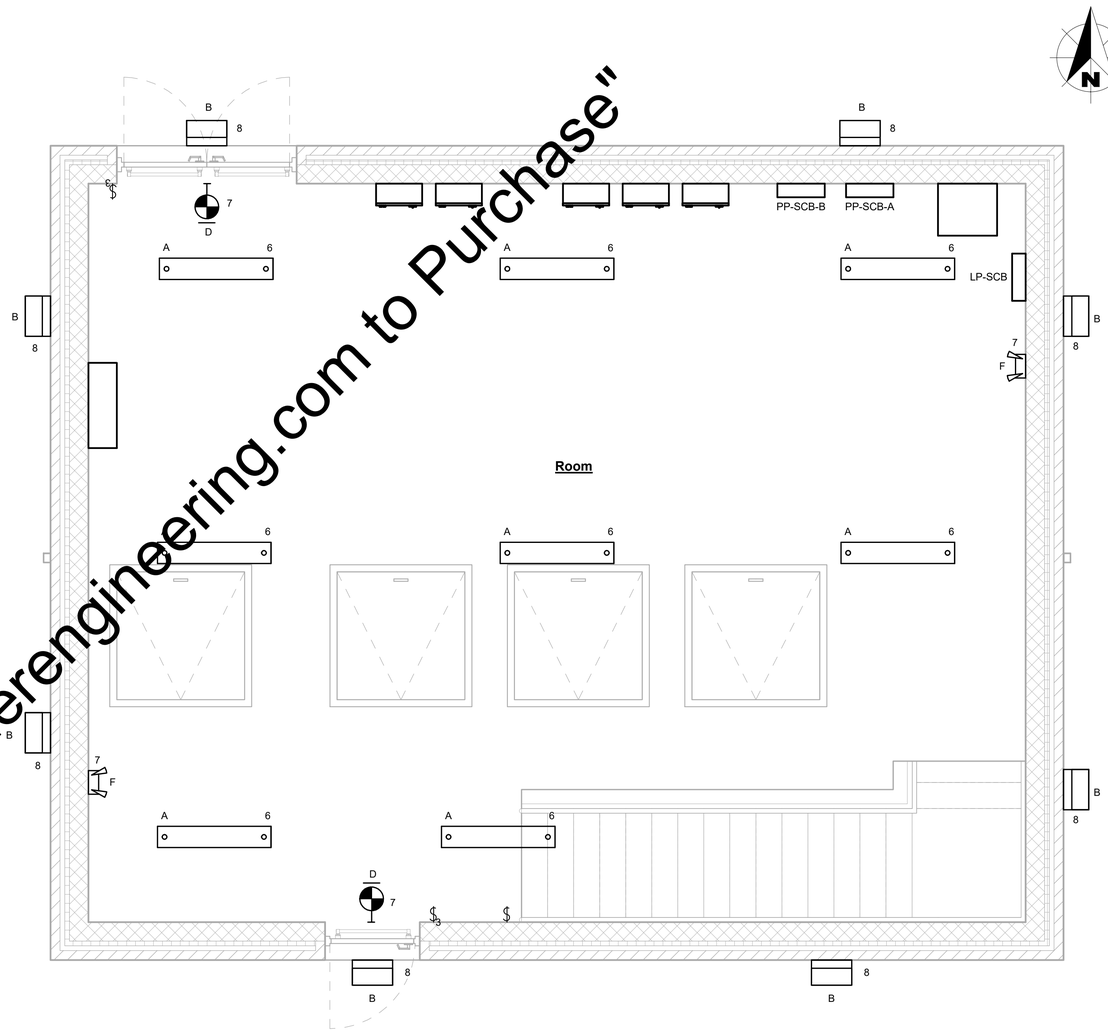

UPPER LEVEL LIGHTING PLAN

0 2 4 6 FT 3/8"=1'-0"

"For Vewing Purposes Only - Visit wesslerengineering.com to Purchase"

SCALE VERIFICATION	DRAWN BY	EAS
BAR IS ONE INCH LONG ON ORIGINAL DRAWING	CHECKED BY	WCM
	APPROVED BY	WCM
	ISSUE DATE	MARCH 2020
	PROJECT NUMBER	193216-04-001

NO.	DATE	INITIALS	REVISION DESCRIPTION

WAYNE C. MOORE REGISTERED No. 10707476 STATE OF INDIANA PROFESSIONAL ENGINEER 3/4/2020

WESSLER ENGINEERING
More than a Project™

WASTEWATER SYSTEM EXPANSION
FRANKFORT UTILITIES
FRANKFORT, INDIANA

NEW SECONDARY CONTROL BUILDING - LIGHTING PLANS

SHEET NO. **9E3**

PAGE NO. 110

Plotted: 3/5/2020 9:50:00 AM J:\Frankfort\Projects\193216 Frankfort WWTP Exp\CAD 04-001\Revit\Models\193216-EL-New Secondary Control Bldg - R19.rvt

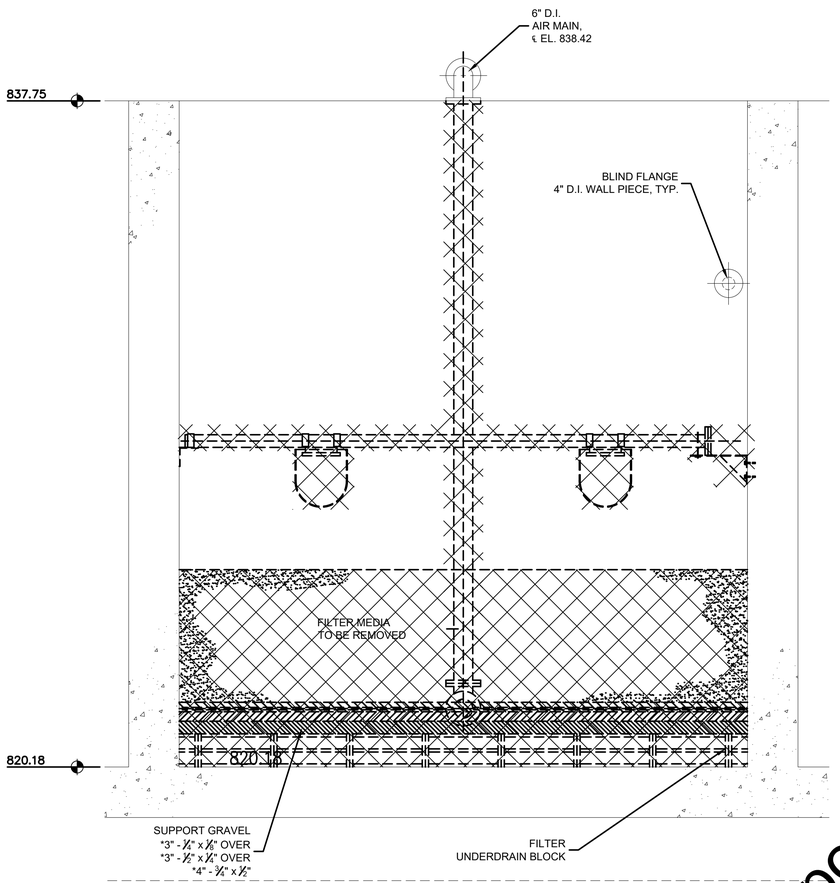

TYPICAL FILTER DEMOLITION SECTION

0 1 2 4 FT 1/2"=1'-0"

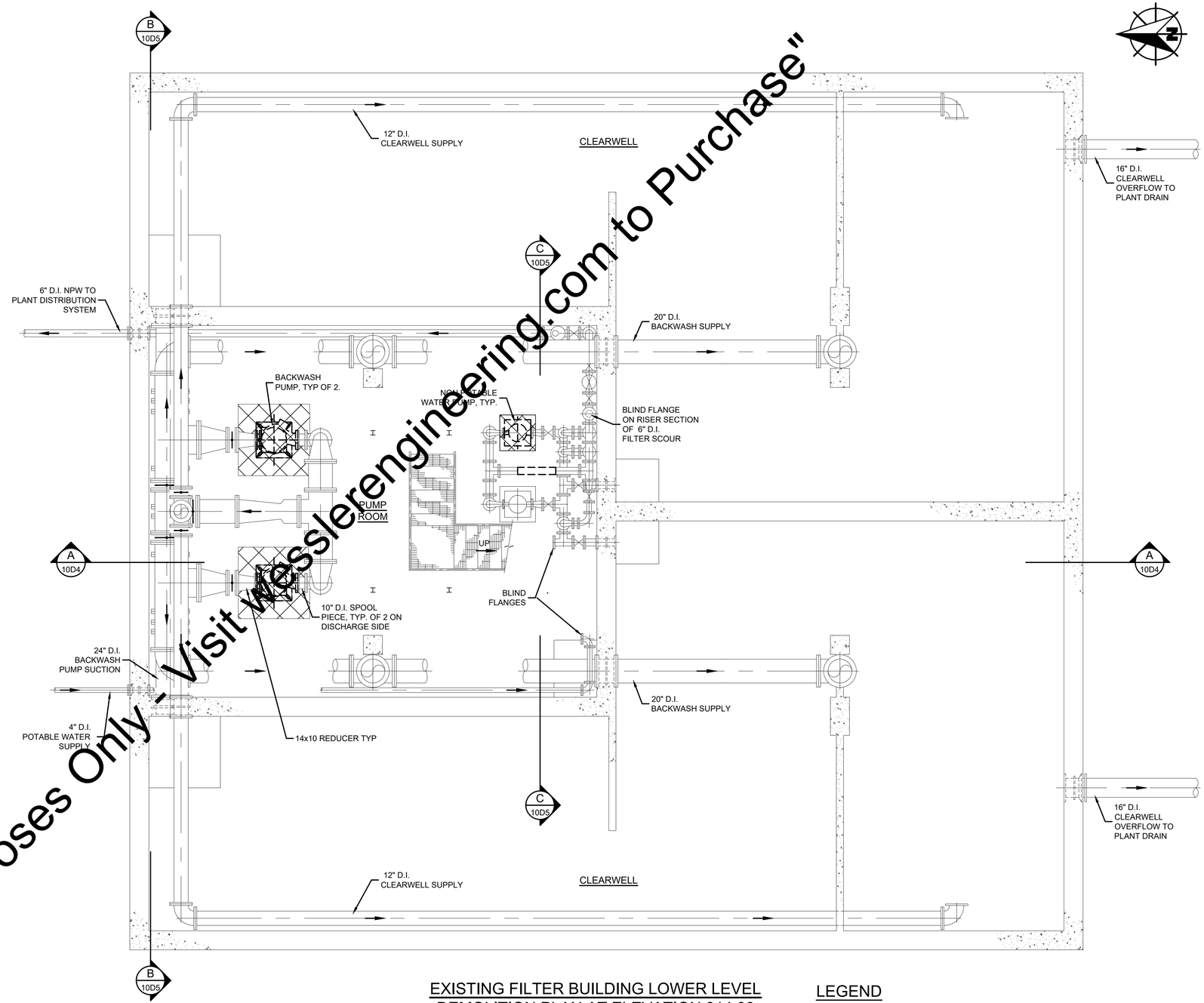

EXISTING FILTER BUILDING LOWER LEVEL
DEMOLITION PLAN AT ELEVATION 814.00

0 2 4 8 FT 1/4"=1'-0"

LEGEND

EXISTING FEATURES TO REMAIN

EXISTING FEATURES TO BE DEMOLISHED

"For Viewing Purposes Only - Visit wesslerengineering.com to Purchase"

SCALE VERIFICATION	DRAWN BY	TWE
BAR IS ONE INCH LONG ON ORIGINAL DRAWING	CHECKED BY	ALT
	APPROVED BY	RWH
	ISSUE DATE	MARCH 2020
	PROJECT NUMBER	193216-04-001

NO.	DATE	INITIALS	REVISION DESCRIPTIONS

ROBERT W. HOLDEN II REGISTERED No. 10000096 STATE OF INDIANA PROFESSIONAL ENGINEER 03/04/2020

WESSLER ENGINEERING
More than a Project™

WASTEWATER SYSTEM EXPANSION

CITY OF FRANKFORT, INDIANA
CONTRACT A - WASTEWATER TREATMENT PLANT

EXISTING TERTIARY FILTER - LOWER LEVEL DEMOLITION PLAN

SHEET NO.
10D1

PAGE NO.
111

Drawing: J:\FrankfortProjects\193216 Frankfort WWTP Exp\CAD 04-0010WG\Sheets\Area 10 - EX-FB\10D FB-DEMO.dwg | Layout: 10D1 | Plotted: 02/28/20 @ 12:01:49 | LastSavedBy: JasonW

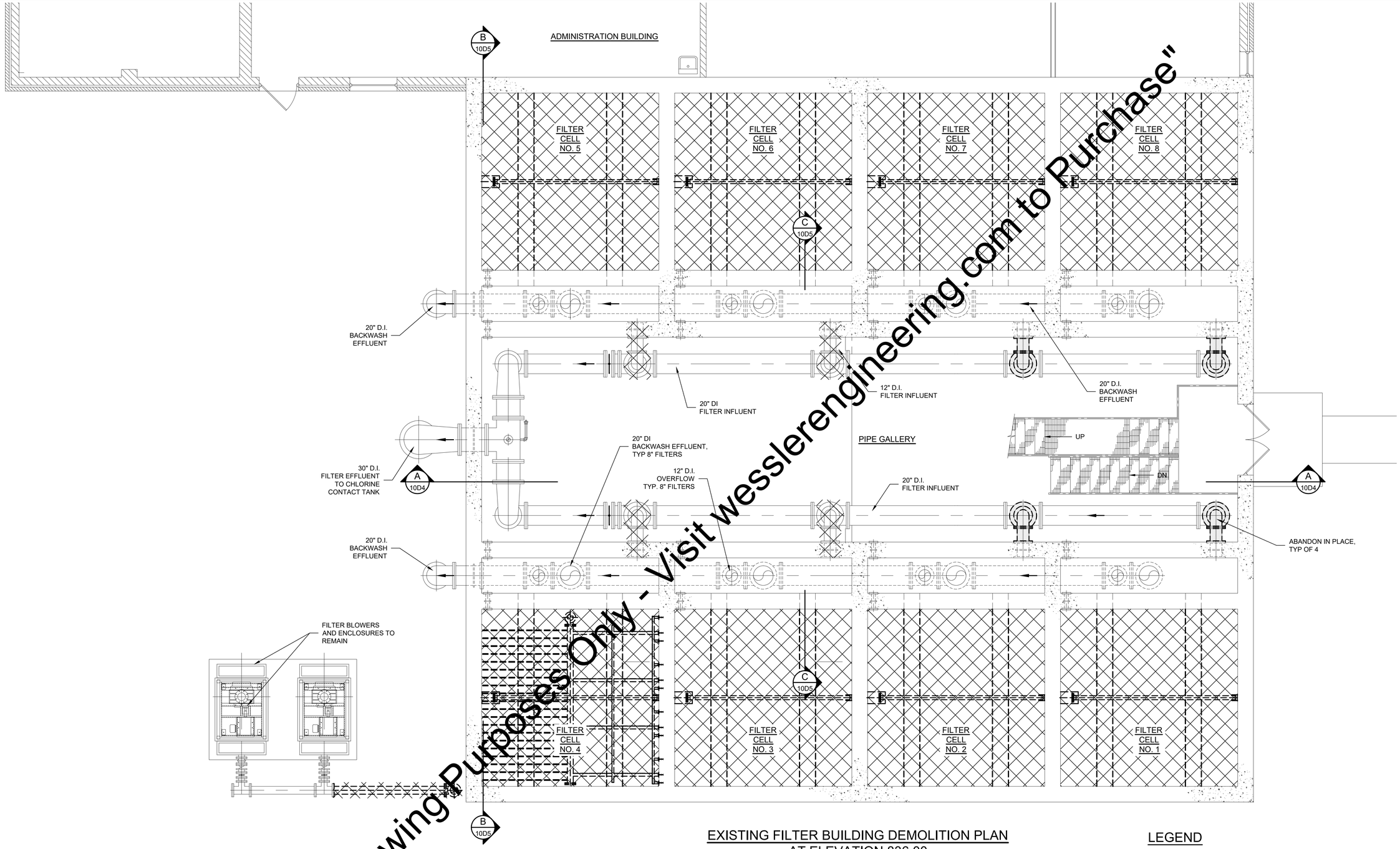

EXISTING FILTER BUILDING DEMOLITION PLAN
AT ELEVATION 836.00

0 2 4 8 FT
1/4"=1'-0"

LEGEND

EXISTING FEATURES TO REMAIN

EXISTING FEATURES TO BE DEMOLISHED

"For Vewing Purposes Only - Visit wesslerengineering.com to Purchase"

SCALE VERIFICATION	DRAWN BY	TWL
BAR IS ONE INCH LONG ON ORIGINAL DRAWING	CHECKED BY	KLT
	APPROVED BY	RWH
	ISSUE DATE	MARCH 2020
	PROJECT NUMBER	193216-04-001

NO.	DATE	INITIALS	REVISION DESCRIPTIONS

ROBERT W. HOLDEN, II REGISTERED No. 10000096 STATE OF INDIANA PROFESSIONAL ENGINEER 03/04/2020

WESSLER ENGINEERING
More than a Project™

WASTEWATER SYSTEM EXPANSION

CITY OF FRANKFORT, INDIANA
CONTRACT A - WASTEWATER TREATMENT PLANT

EXISTING TERTIARY FILTER - MIDDLE LEVEL DEMOLITION PLAN

SHEET NO.
10D2

PAGE NO.
112

Drawing: J:\Frankfort\Projects\193216 Frankfort WWTP Exp\CAD 04-001\DWG\Sheets\Area 10 - EX-FB\10D FB-DEMO.dwg | Layout: 10D2 | Plotted: 02/28/20 @ 12:08:35 | LastSavedBy: JasonW

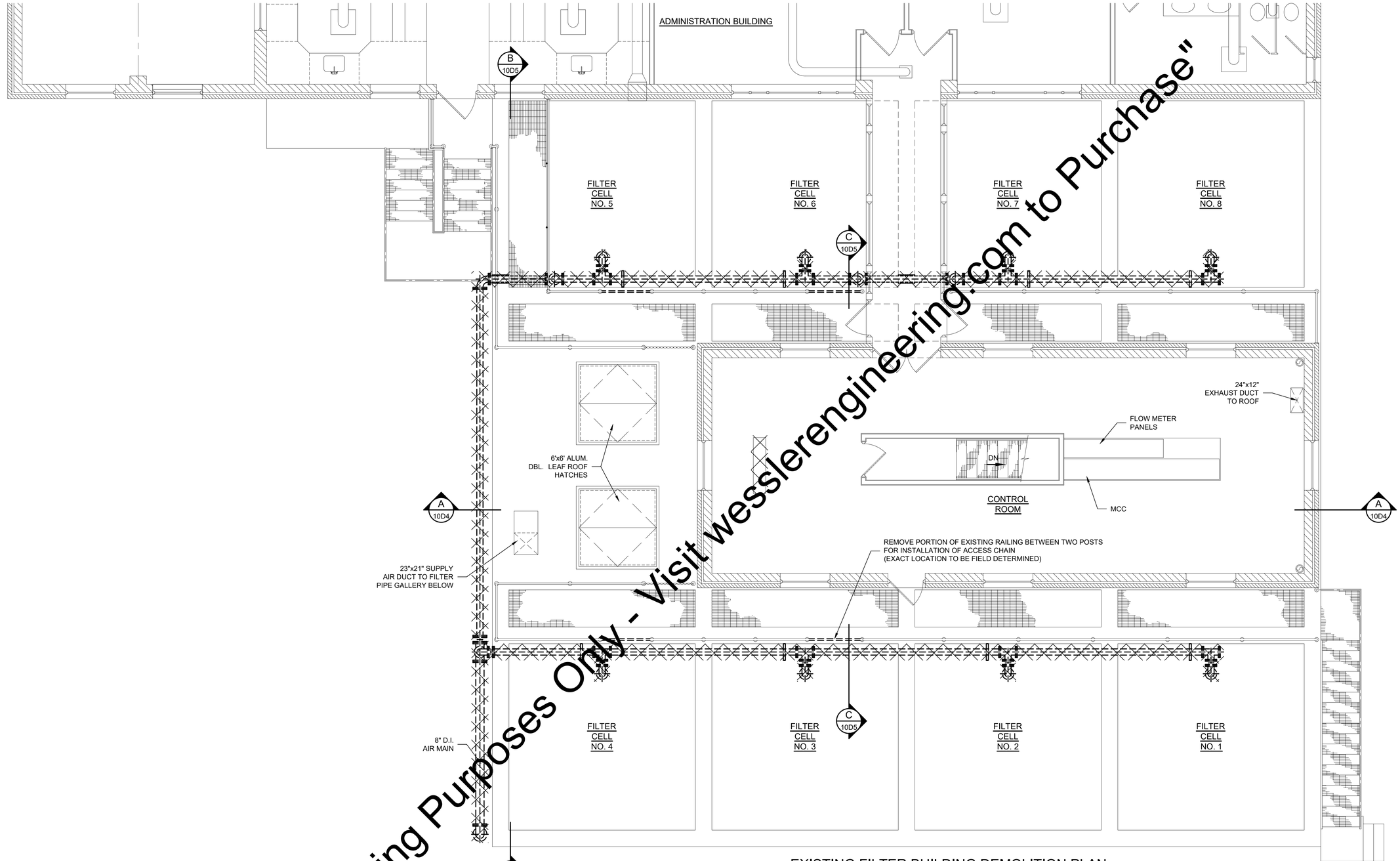

EXISTING FILTER BUILDING DEMOLITION PLAN
AT ELEVATION 840.00

0 2 4 8 FT
1/4"=1'-0"

LEGEND

EXISTING FEATURES TO REMAIN

EXISTING FEATURES TO BE DEMOLISHED

"For Vewing Purposes Only - Visit wesslerengineering.com to Purchase"

SCALE VERIFICATION	DRAWN BY	TWC
BAR IS ONE INCH LONG ON ORIGINAL DRAWING	CHECKED BY	MLT
	APPROVED BY	RWH
	ISSUE DATE	MARCH 2020
	PROJECT NUMBER	193216-04-001

NO.	DATE	INITIALS	REVISION DESCRIPTIONS

ROBERT W. HOLDEN, II REGISTERED No. 10000096 STATE OF INDIANA PROFESSIONAL ENGINEER 03/04/2020

WESSLER ENGINEERING
More than a Project™

WASTEWATER SYSTEM EXPANSION

CITY OF FRANKFORT, INDIANA
CONTRACT A - WASTEWATER TREATMENT PLANT

EXISTING TERTIARY FILTER - UPPER LEVEL DEMOLITION PLAN

SHEET NO.
10D3

PAGE NO.
113

Drawing: J:\Frankfort\Projects\193216 Frankfort WWTP Exp\CAD 04-001\DWG\Sheets\Area 10 - EX-FB\10D FB-DEMO.dwg | Layout: 10D3 | Plotted: 02/28/20 @ 12:16:29 | LastSavedBy: JasonW

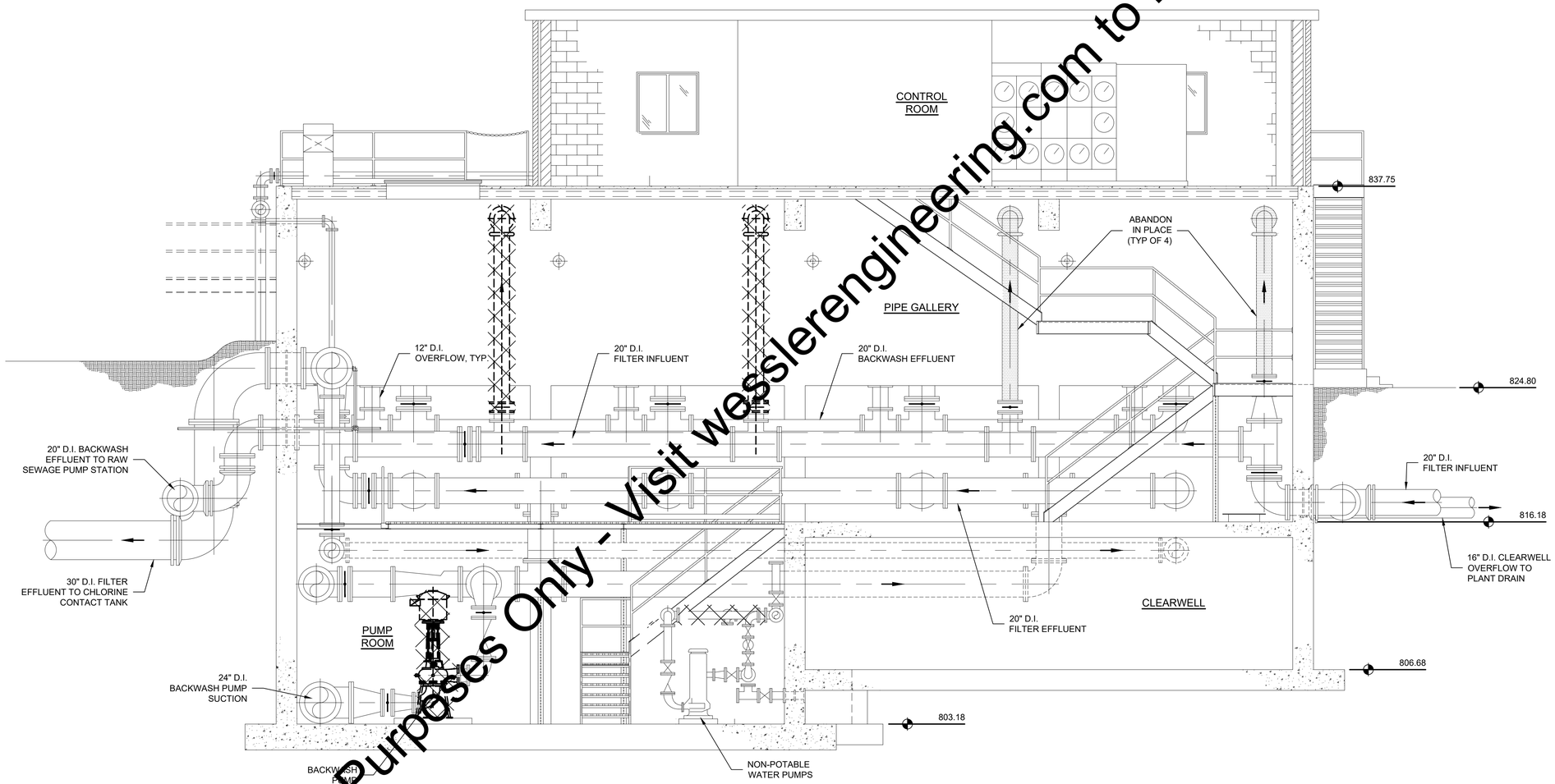

SECTION A 10D1 10D2 10D3

0 2 4 8 FT 1/4"=1'-0"

LEGEND

EXISTING FEATURES TO REMAIN

EXISTING FEATURES TO BE DEMOLISHED

"For Vewing Purposes Only - Visit wesslerengineering.com to Purchase"

SCALE VERIFICATION	DRAWN BY	TWS
BAR IS ONE INCH LONG ON ORIGINAL DRAWING	CHECKED BY	KLT
	APPROVED BY	RWH
	ISSUE DATE	MARCH 2020
	PROJECT NUMBER	193216-04-001

NO.	DATE	INITIALS	REVISION DESCRIPTIONS

ROBERT W. HOLDEN, II REGISTERED No. 10000096 STATE OF INDIANA PROFESSIONAL ENGINEER 03/04/2020

WESSLER ENGINEERING
More than a Project™

WASTEWATER SYSTEM EXPANSION

CITY OF FRANKFORT, INDIANA
CONTRACT A - WASTEWATER TREATMENT PLANT

EXISTING TERTIARY FILTER - DEMOLITION SECTIONS

SHEET NO. **10D4**

PAGE NO. 114

Drawing: J:\Frankfort\Projects\193216 Frankfort WWTP Exp\CAD 04-0010\DWG\Sheets\Area 10 - EX-FB\10D FB-DEMO.dwg | Layout: 10D4 | Plotted: 02/28/20 @ 12:24:43 | LastSavedBy: JasonW

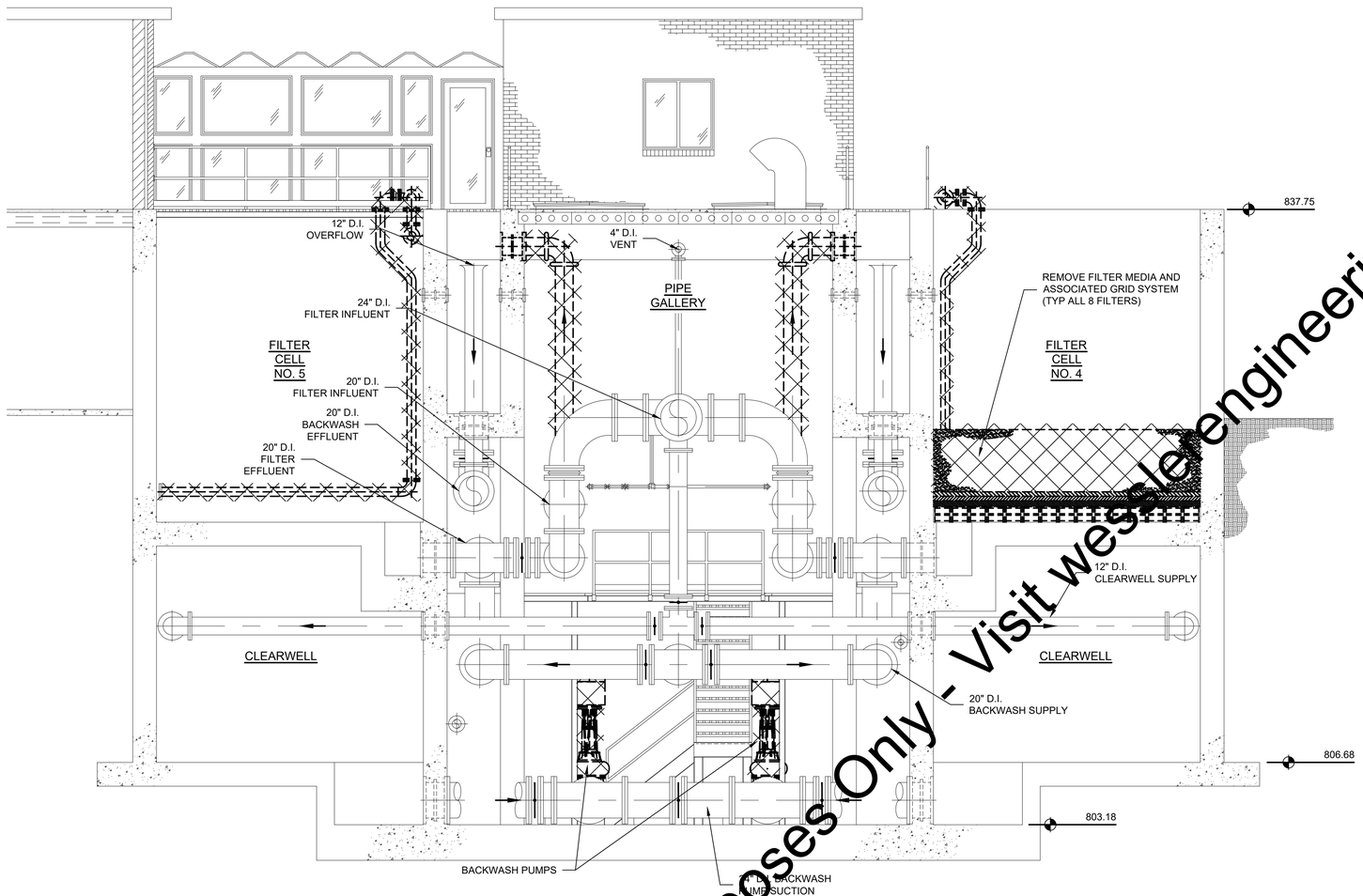

SECTION B 10D1

0 2 4 8 FT 1/4"=1'-0"

10D2
10D3

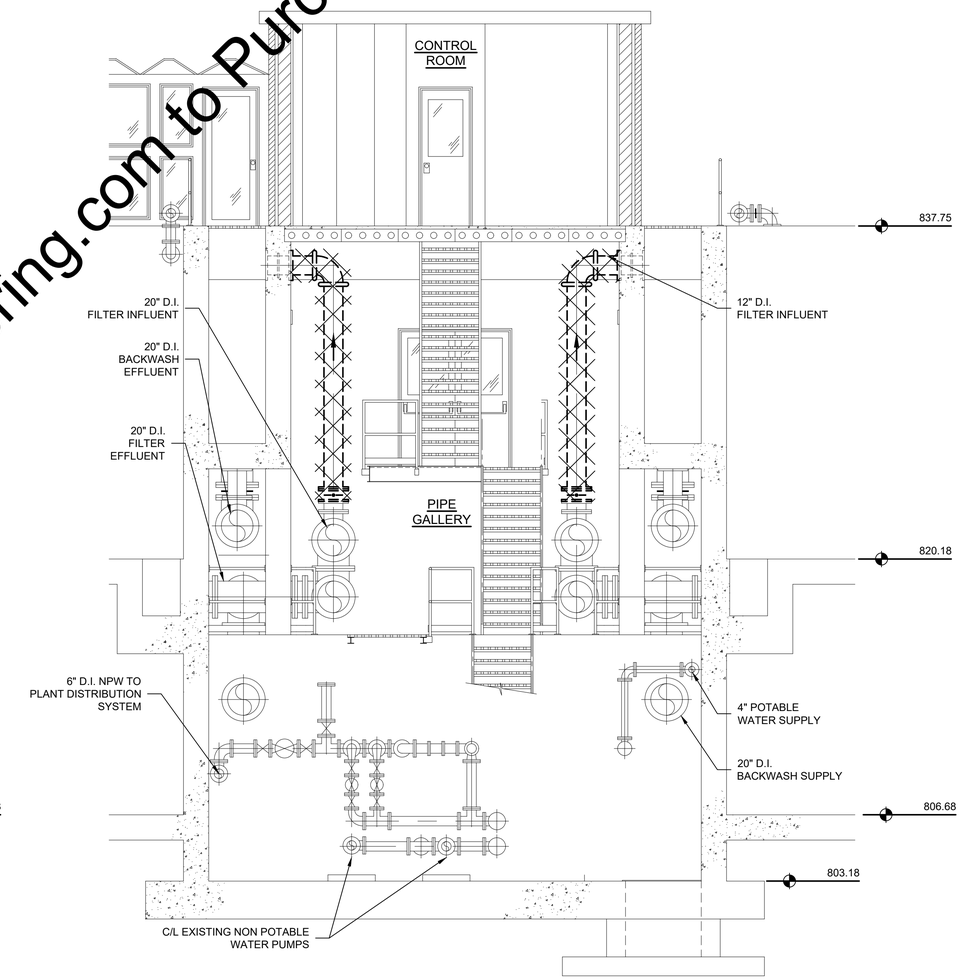

SECTION C 10D1

0 2 4 8 FT 1/4"=1'-0"

10D2
10D3

LEGEND

EXISTING FEATURES TO REMAIN

EXISTING FEATURES TO BE DEMOLISHED

"For Vewing Purposes Only - Visit wessleengineering.com to Purchase"

SCALE VERIFICATION	DRAWN BY	TWH
BAR IS ONE INCH LONG ON ORIGINAL DRAWING	CHECKED BY	ALT
	APPROVED BY	RWH
	ISSUE DATE	MARCH 2020
	PROJECT NUMBER	193216-04-001

NO.	DATE	INITIALS	REVISION DESCRIPTIONS

ROBERT W. HOLDEN, II REGISTERED No. 10000096 STATE OF INDIANA PROFESSIONAL ENGINEER 03/04/2020

WESSLER ENGINEERING
More than a Project™

WASTEWATER SYSTEM EXPANSION

CITY OF FRANKFORT, INDIANA
CONTRACT A - WASTEWATER TREATMENT PLANT

EXISTING TERTIARY FILTER - DEMOLITION SECTIONS

SHEET NO. **10D5**

PAGE NO. 115

Drawing: J:\Frankfort\Projects\193216 Frankfort WWTP Exp\CAD 04-001\DWG\Sheets\Area 10 - EX-FB\10D FB-DEMO.dwg | Layout: 10D5 | Plotted: 02/28/20 @ 12:45:17 | LastSavedBy: JasonW

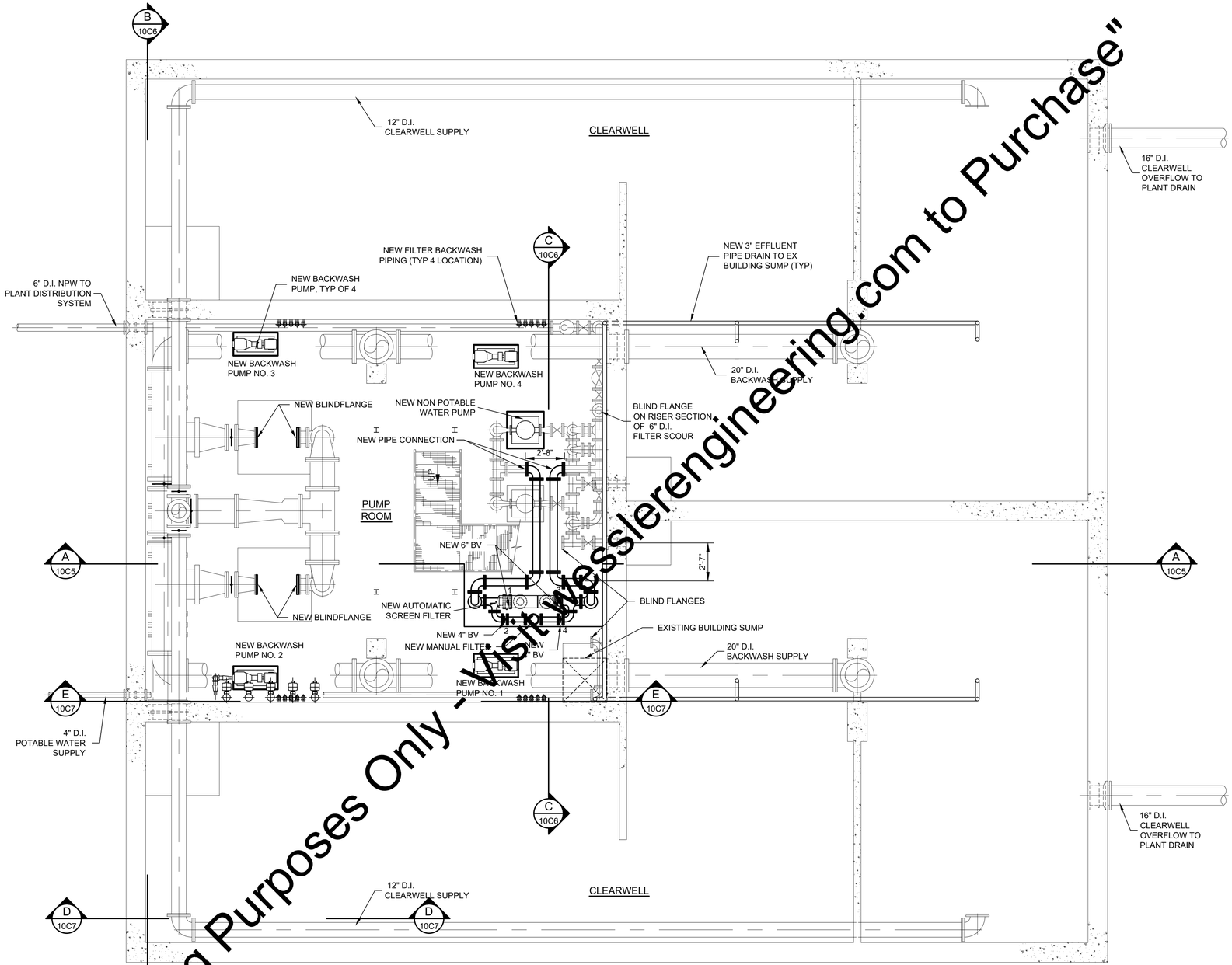

NOTES:

1. REPLACE EXISTING SUMP PUMP SYSTEM WITH NEW PUMPS AND PIPING PER SPECIFICATIONS AND DETAILS ON SHEET 16C2.

LEGEND

EXISTING FEATURES

NEW FEATURES

LOWER LEVEL MODIFICATION PLAN
AT ELEVATION 814.00

0 2 4 8 FT
1/4"=1'-0"

"For Viewing Purposes Only - Visit Wesslerengineering.com to Purchase"

SCALE VERIFICATION	DRAWN BY	TWE
BAR IS ONE INCH LONG ON ORIGINAL DRAWING	CHECKED BY	ALT
	APPROVED BY	RWH
	ISSUE DATE	MARCH 2020
	PROJECT NUMBER	193216-04-001

NO.	DATE	INITIALS	REVISION DESCRIPTIONS

ROBERT W. HOLDEN II REGISTERED No. 10000096 STATE OF INDIANA PROFESSIONAL ENGINEER 03MAR2020

WESSLER ENGINEERING
More than a Project™

WASTEWATER SYSTEM EXPANSION

CITY OF FRANKFORT, INDIANA
CONTRACT A - WASTEWATER TREATMENT PLANT

EXISTING TERTIARY FILTER - LOWER LEVEL MODIFICATION PLAN

SHEET NO.
10C1

PAGE NO.
116

Drawing: J:\Frankfort\Projects\193216 Frankfort WWTP Exp\CAD 04-001\DWG\Sheets\Area 10 - EX-FB\10C FB-PROPOSED.dwg | Layout: 10C1 LOWER - 814.00 | Plotted: 02/28/20 @ 01:06:56 | LastSavedBy: MikeN

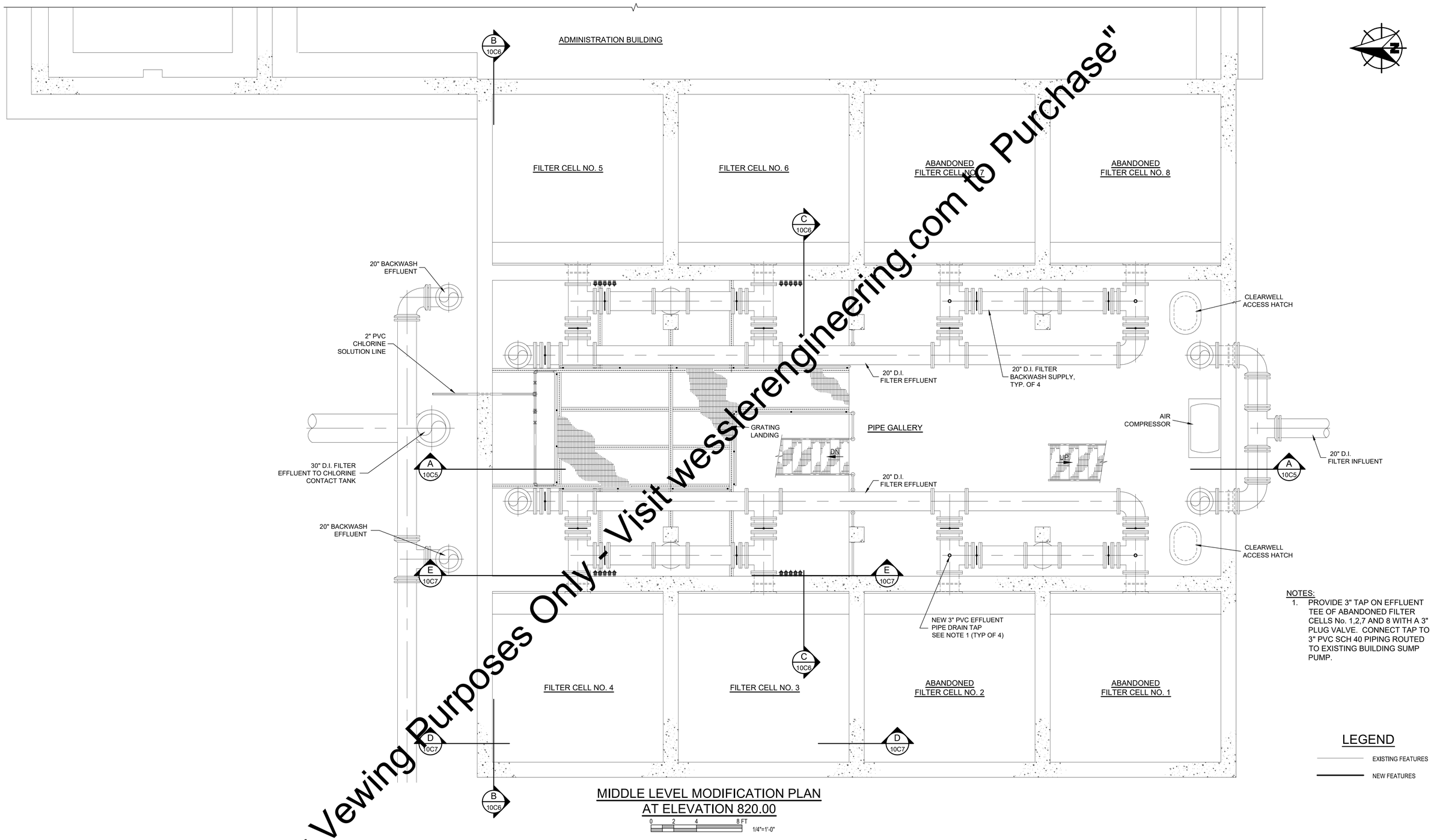

MIDDLE LEVEL MODIFICATION PLAN
AT ELEVATION 820.00

NOTES:
1. PROVIDE 3" TAP ON EFFLUENT TEE OF ABANDONED FILTER CELLS No. 1,2,7 AND 8 WITH A 3" PLUG VALVE. CONNECT TAP TO 3" PVC SCH 40 PIPING ROUTED TO EXISTING BUILDING SUMP PUMP.

LEGEND
EXISTING FEATURES
NEW FEATURES

"For Vewing Purposes Only - Visit wesslerengineering.com to Purchase"

SCALE VERIFICATION	DRAWN BY	TWE
BAR IS ONE INCH LONG ON ORIGINAL DRAWING	CHECKED BY	ALT
	APPROVED BY	RWH
	ISSUE DATE	MARCH 2020
	PROJECT NUMBER	193216-04-001

NO.	DATE	INITIALS	REVISION DESCRIPTIONS

ROBERT W. HOLDEN II REGISTERED No. 10000096 STATE OF INDIANA PROFESSIONAL ENGINEER 03MAR2020

WESSLER ENGINEERING
More than a Project™

WASTEWATER SYSTEM EXPANSION
CITY OF FRANKFORT, INDIANA
CONTRACT A - WASTEWATER TREATMENT PLANT

EXISTING TERTIARY FILTER - MIDDLE LEVEL MODIFICATION PLAN

SHEET NO. **10C2**

PAGE NO. 117

Drawing: J:\Frankfort\Projects\193216 Frankfort WWTP Exp\CAD 04-001\DWG\Sheets\Area 10 - EX-FB\10C FB-PROPOSED.dwg | Layout: 10C2 MIDDLE - 820.00 | Plotted: 02/28/20 @ 01:07:18 | LastSavedBy: MikeN

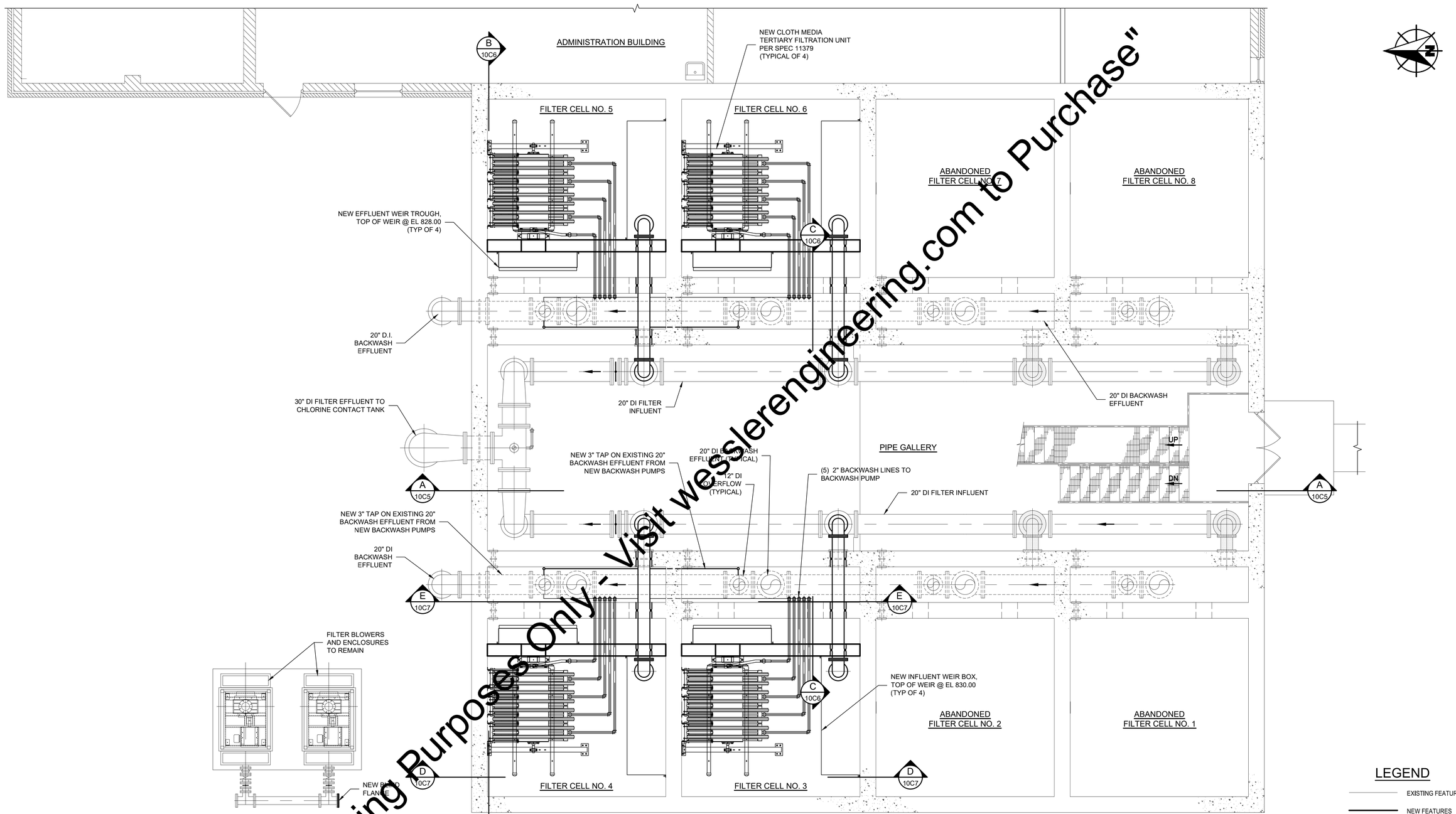

UPPER LEVEL MODIFICATION PLAN
AT ELEVATION 836.00

LEGEND

EXISTING FEATURES

NEW FEATURES

"For Viewing Purposes Only - Visit wesslerengineering.com to Purchase"

SCALE VERIFICATION	DRAWN BY	TWL
BAR IS ONE INCH LONG ON ORIGINAL DRAWING	CHECKED BY	KLT
	APPROVED BY	RWH
	ISSUE DATE	MARCH 2020
	PROJECT NUMBER	193216-04-001

NO.	DATE	INITIALS	REVISION DESCRIPTIONS

ROBERT W. HOLDEN, II REGISTERED No. 10000096 STATE OF INDIANA PROFESSIONAL ENGINEER 03/04/2020

WESSLER ENGINEERING
More than a Project™

WASTEWATER SYSTEM EXPANSION

CITY OF FRANKFORT, INDIANA
CONTRACT A - WASTEWATER TREATMENT PLANT

EXISTING TERTIARY FILTER - UPPER LEVEL MODIFICATION PLAN

SHEET NO. **10C3**

PAGE NO. 118

Drawing: J:\Frankfort\Projects\193216 Frankfort WWTP Exp\CAD 04-0010\DWGS\Sheets\Area 10 - EX-FB\10C FB-PROPOSED.dwg | Layout: 10C3 UPPER - 836.00 | Plotted: 02/28/20 @ 01:07:40 | LastSavedBy: MikeN

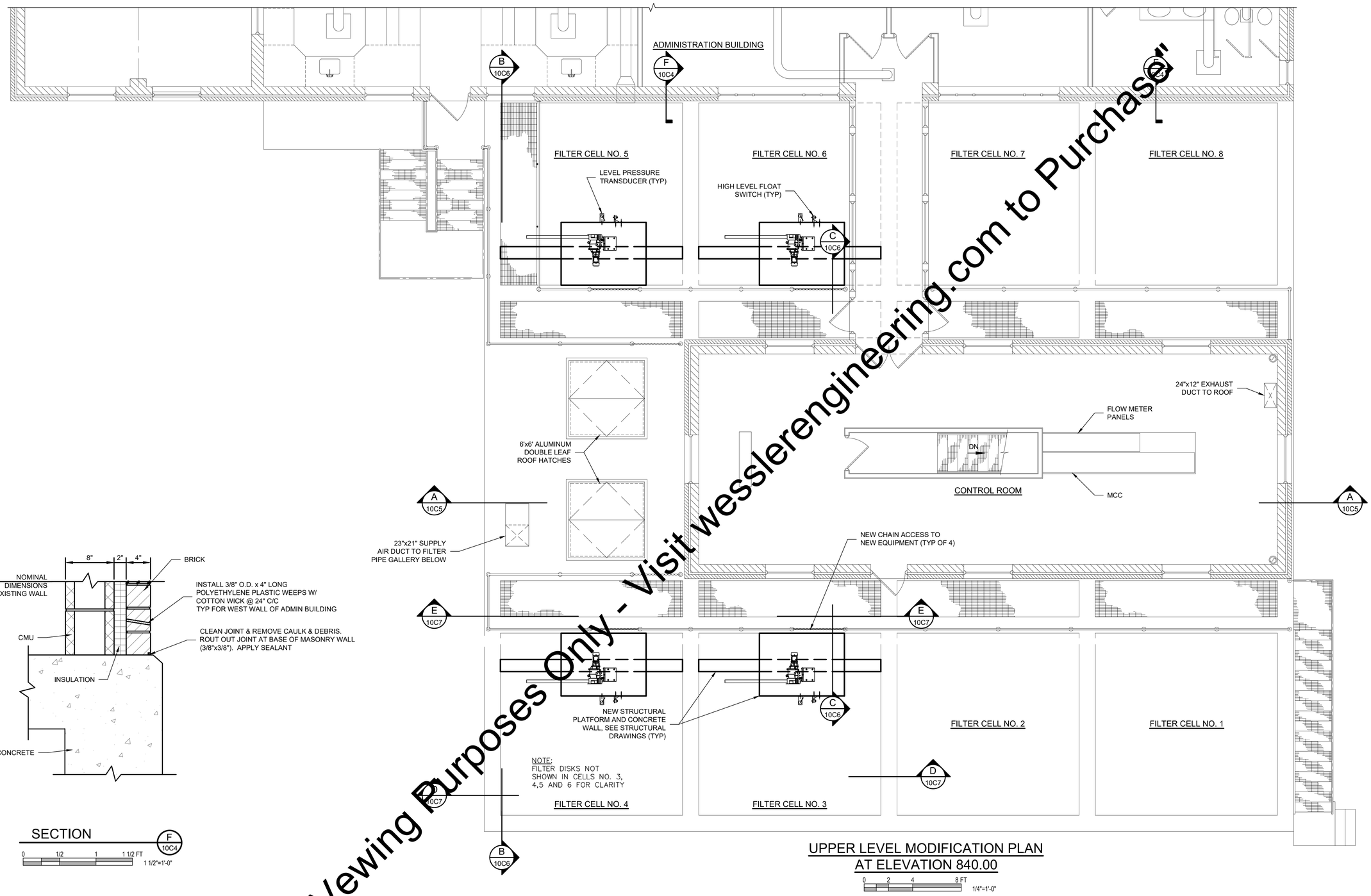

UPPER LEVEL MODIFICATION PLAN
AT ELEVATION 840.00

0 2 4 8 FT
1/4"=1'-0"

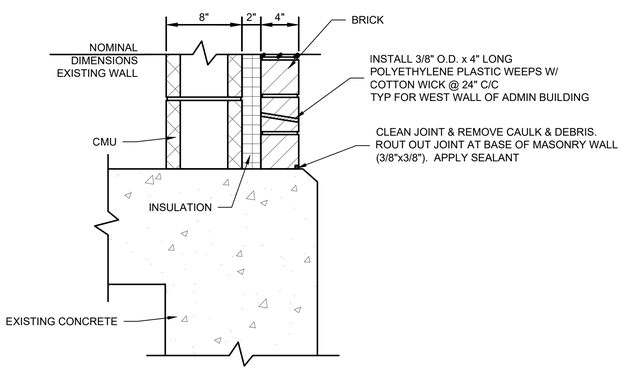

SECTION F 10C4

0 1/2 1 1 1/2 FT
1 1/2"=1'-0"

LEGEND

EXISTING FEATURES
NEW FEATURES

"For Viewing Purposes Only - Visit wesslerengineering.com to Purchase"

SCALE VERIFICATION	DRAWN BY	TWS
BAR IS ONE INCH LONG ON ORIGINAL DRAWING	CHECKED BY	KLT
	APPROVED BY	RWH
	ISSUE DATE	MARCH 2020
	PROJECT NUMBER	193216-04-001

NO.	DATE	INITIALS	REVISION DESCRIPTIONS

ROBERT W. HOLDEN II REGISTERED No. 10000096 STATE OF INDIANA PROFESSIONAL ENGINEER 03/04/2020

WESSLER ENGINEERING
More than a Project™

WASTEWATER SYSTEM EXPANSION
CITY OF FRANKFORT, INDIANA
CONTRACT A - WASTEWATER TREATMENT PLANT

EXISTING TERTIARY FILTER - TOP LEVEL MODIFICATION PLAN

SHEET NO. **10C4**

PAGE NO. 119

Drawing: J:\Frankfort\Projects\193216 Frankfort WWTP Exp\CAD 04-001\DWG\Sheets\Area 10 - EX-FB\10C-FB-PROPOSED.dwg | Layout: 10C4 TOP - 840.00 | Plotted: 02/28/20 @ 01:08:01 | LastSavedBy: MikeN

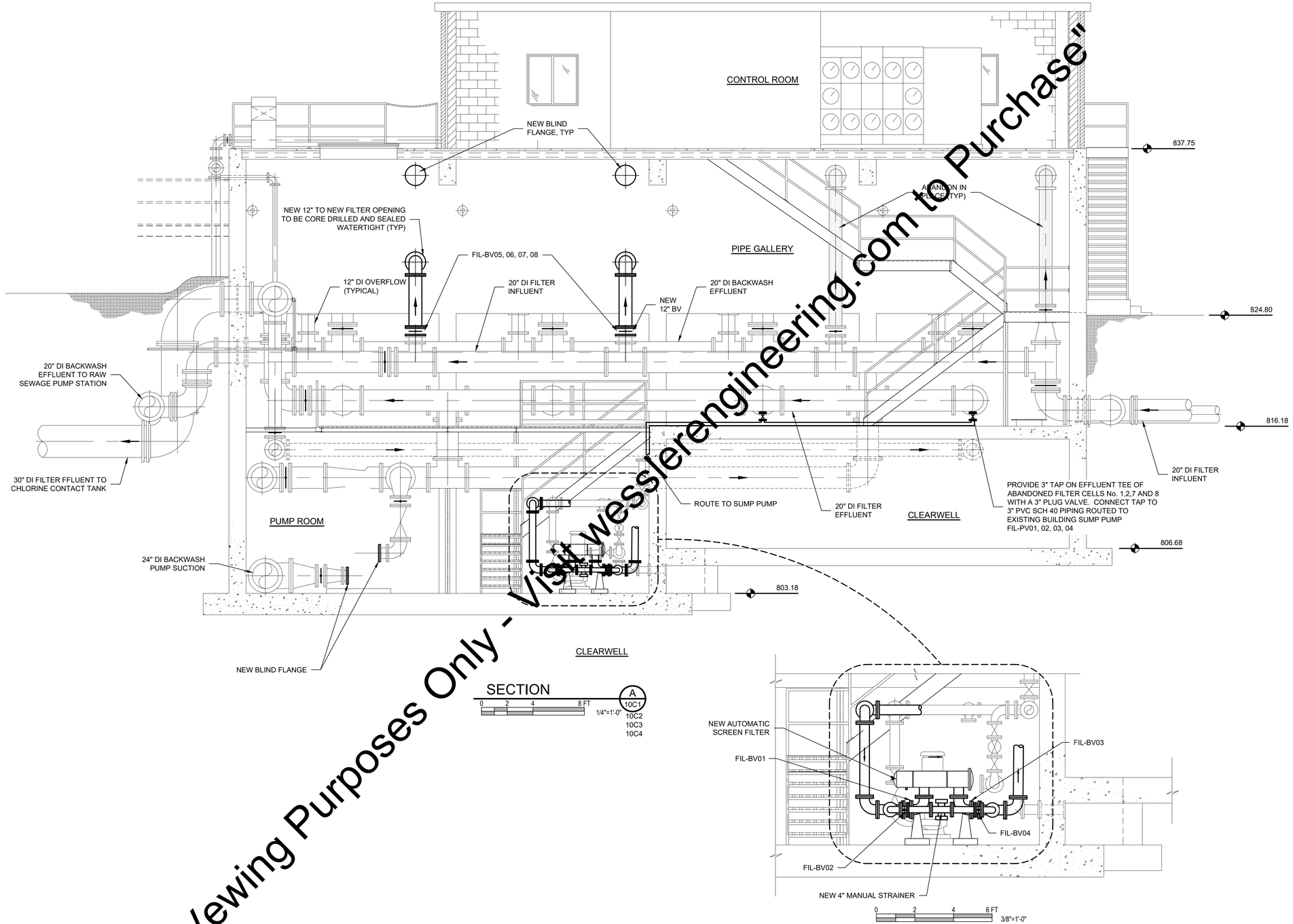

"For Vewing Purposes Only - Visit wesslerengineering.com to Purchase"

LEGEND

- EXISTING FEATURES
- NEW FEATURES

SCALE VERIFICATION	DRAWN BY	TWL
BAR IS ONE INCH LONG ON ORIGINAL DRAWING	CHECKED BY	ALT
	APPROVED BY	RWH
	ISSUE DATE	MARCH 2020
	PROJECT NUMBER	193216-04-001

NO.	DATE	INITIALS	REVISION DESCRIPTIONS

ROBERT W. HOLDEN II REGISTERED No. 10000096 STATE OF INDIANA PROFESSIONAL ENGINEER 03/04/2020

WESSLER ENGINEERING
More than a Project™

WASTEWATER SYSTEM EXPANSION

CITY OF FRANKFORT, INDIANA
CONTRACT A - WASTEWATER TREATMENT PLANT

EXISTING TERTIARY FILTER - MODIFICATION SECTIONS

SHEET NO. **10C5**

PAGE NO. 120

Drawing: J:\Frankfort\Projects\193216 Frankfort WWTP Exp\CAD 04-001\DWG\Sheets\Area 10 - EX-FB\10C FB-PROPOSED.dwg | Layout: 10C5 SECTION | Plotted: 02/28/20 @ 01:08:22 | LastSavedBy: MikeN

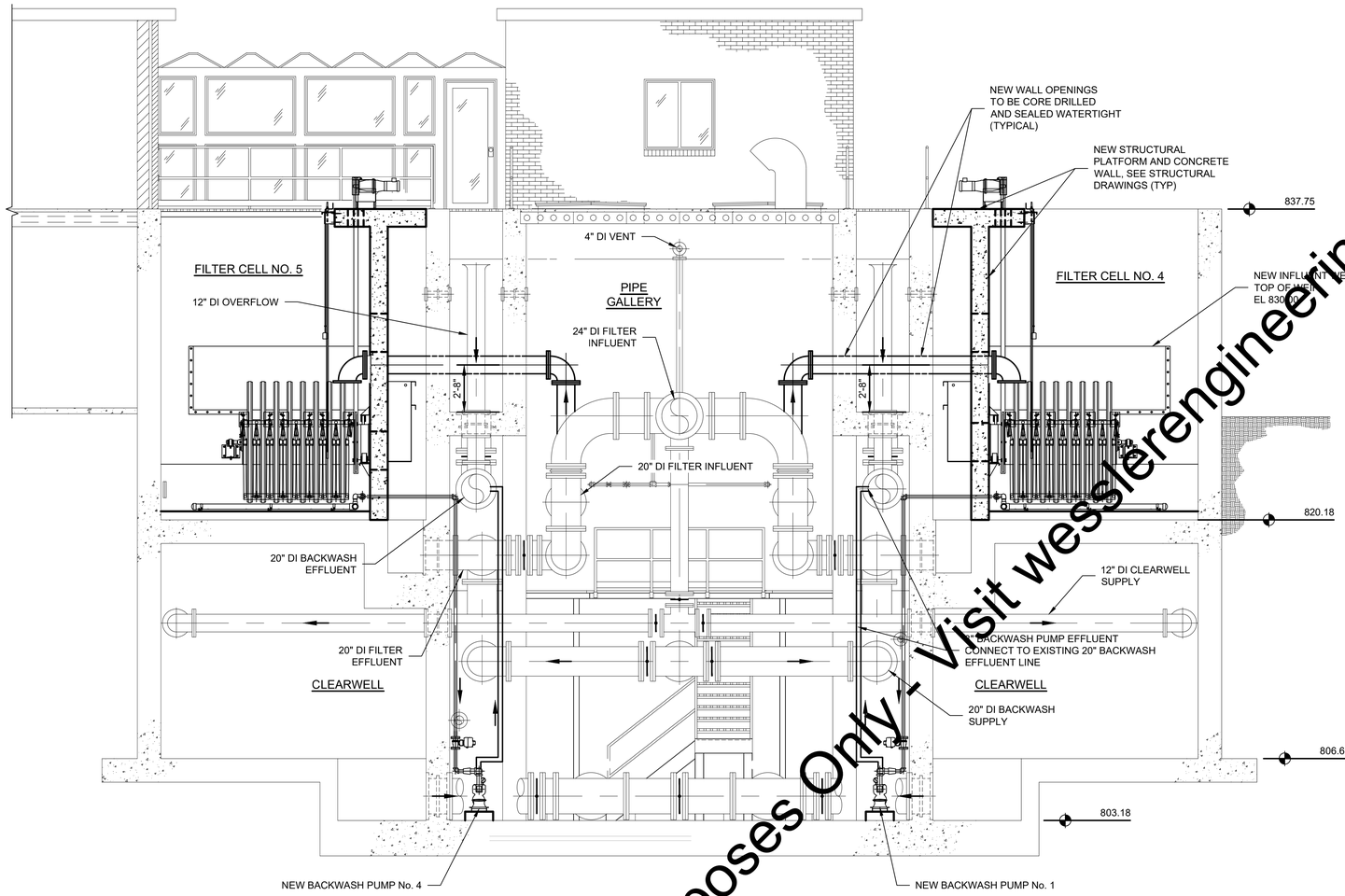

SECTION B 10C1
0 2 4 8 FT
1/4"=1'-0"
10C2
10C3
10C4

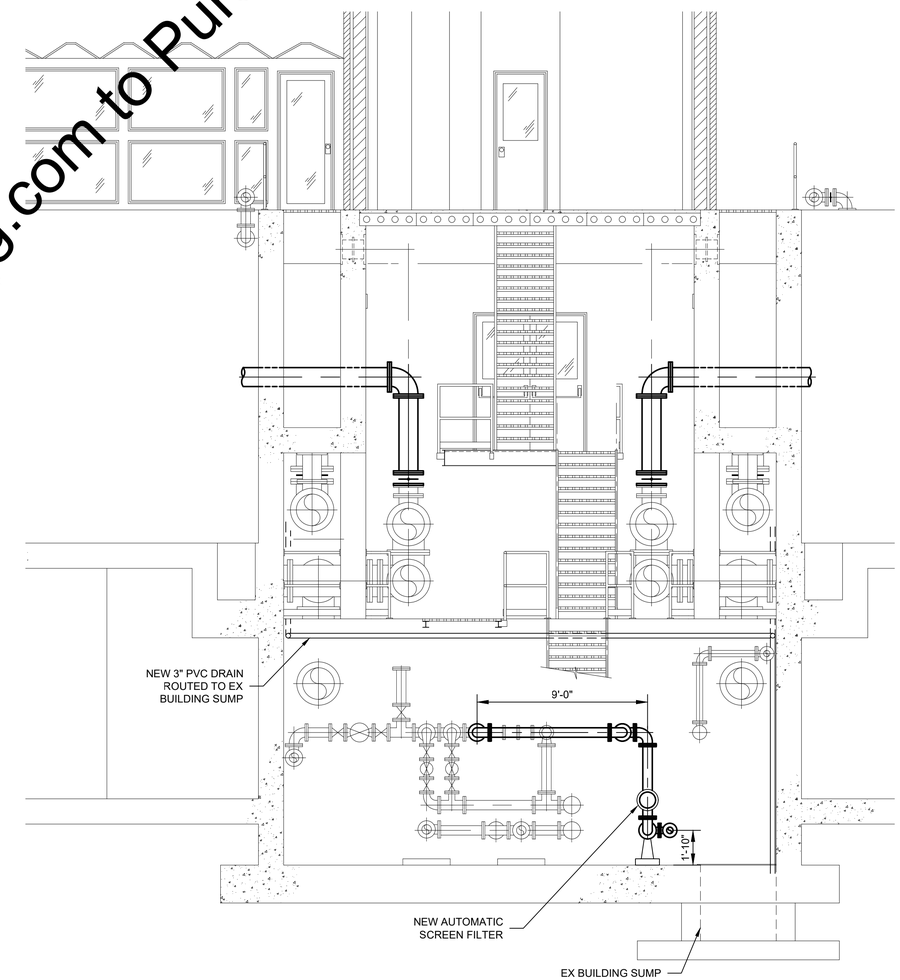

SECTION C 10C1
0 2 4 8 FT
1/4"=1'-0"
10C2
10C3
10C4

LEGEND

EXISTING FEATURES

NEW FEATURES

"For Viewing Purposes Only - Visit wesslerengineering.com to Purchase"

SCALE VERIFICATION	DRAWN BY	TWE
BAR IS ONE INCH LONG ON ORIGINAL DRAWING	CHECKED BY	ALT
	APPROVED BY	RWH
	ISSUE DATE	MARCH 2020
	PROJECT NUMBER	193216-04-001

NO.	DATE	INITIALS	REVISION DESCRIPTIONS

ROBERT W. HOLDEN II REGISTERED No. 10000096 STATE OF INDIANA PROFESSIONAL ENGINEER 03MAR2020

WESSLER ENGINEERING
More than a Project™

WASTEWATER SYSTEM EXPANSION

CITY OF FRANKFORT, INDIANA
CONTRACT A - WASTEWATER TREATMENT PLANT

EXISTING TERTIARY FILTER - MODIFICATION SECTIONS

SHEET NO.
10C6

PAGE NO.
121

Drawing: J:\Frankfort\Projects\193216 Frankfort WWTP Exp\CAD 04-001\DWGS\Sheets\Area 10 - EX-FB\10C FB-PROPOSED.dwg | Layout: 10C6 SECTIONS | Plotted: 02/28/20 @ 01:08:52 | LastSavedBy: MikeN

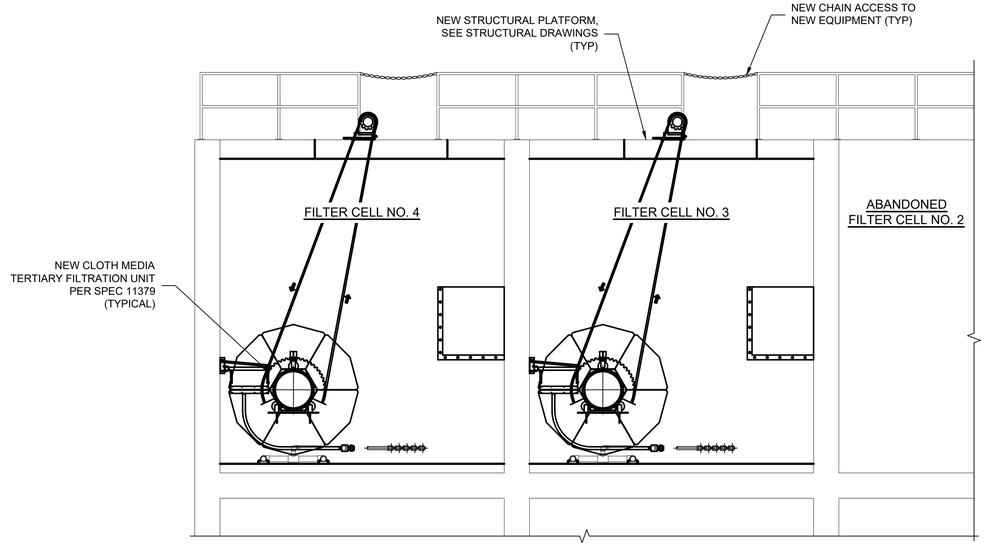

SECTION D 10C1
0 2 4 8 FT
1/4"=1'-0"
10C2
10C3
10C4

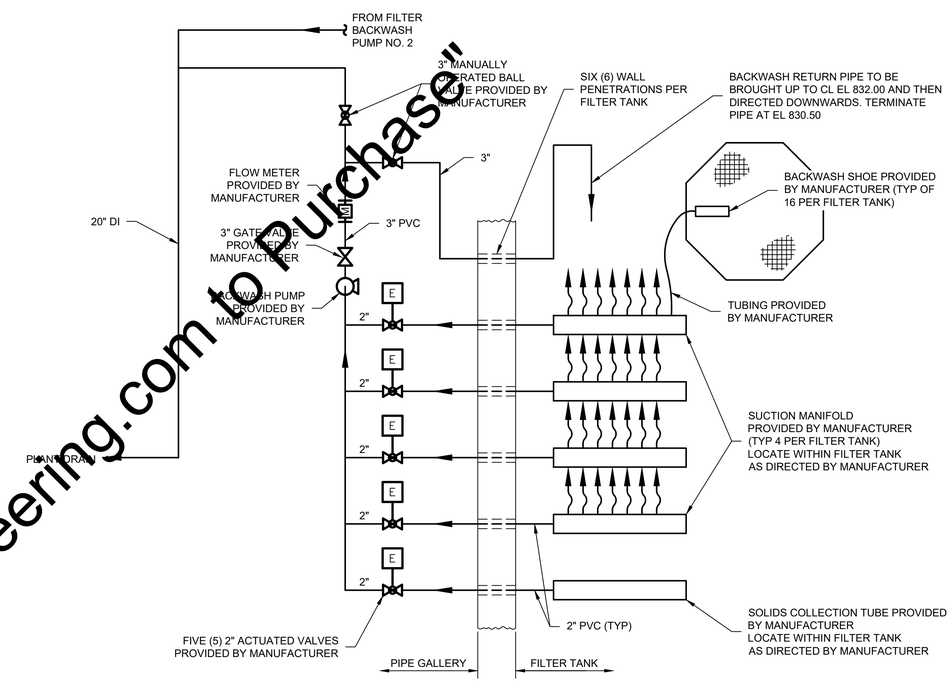

CLOTH MEDIA FILTER
BACKWASH SYSTEM DIAGRAM
SCALE: NONE
TYPICAL OF FOUR CELLS

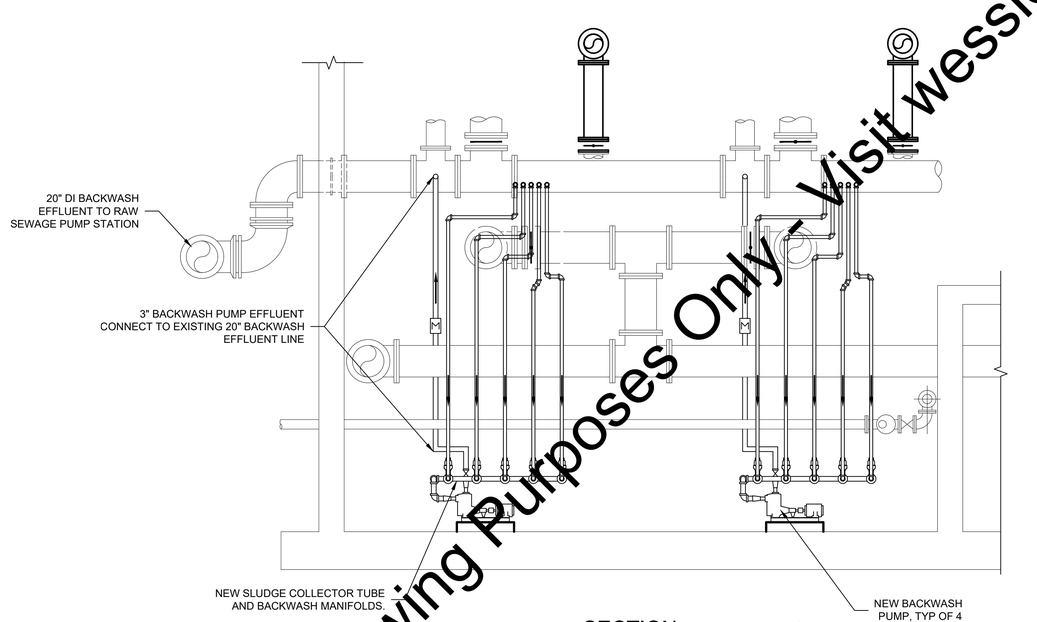

SECTION E 10C1
0 2 4 8 FT
1/4"=1'-0"
10C2
10C3
10C4

LEGEND
EXISTING FEATURES
NEW FEATURES

"For Viewing Purposes Only - Visit wesslerengineering.com to purchase"

SCALE VERIFICATION	DRAWN BY	TWC
BAR IS ONE INCH LONG ON ORIGINAL DRAWING	CHECKED BY	MLT
	APPROVED BY	RWH
	ISSUE DATE	MARCH 2020
	PROJECT NUMBER	193216-04-001

NO.	DATE	INITIALS	REVISION DESCRIPTIONS

ROBERT W. HOLDEN, II REGISTERED No. 10000096 STATE OF INDIANA PROFESSIONAL ENGINEER 03/04/2020

WESSLER ENGINEERING
More than a Project™

WASTEWATER SYSTEM EXPANSION
CITY OF FRANKFORT, INDIANA
CONTRACT A - WASTEWATER TREATMENT PLANT

EXISTING TERTIARY FILTER - MODIFICATION SECTIONS

SHEET NO. **10C7**
PAGE NO. 122

Drawing: J:\Frankfort\Projects\193216 Frankfort WWTP Exp\CAD 04-001\DWG\Sheets\Area 10 - EX-FB\10C FB-PROPOSED.dwg | Layout: 10C7 SECTIONS | Plotted: 02/28/20 @ 01:09:14 | LastSavedBy: MikeN

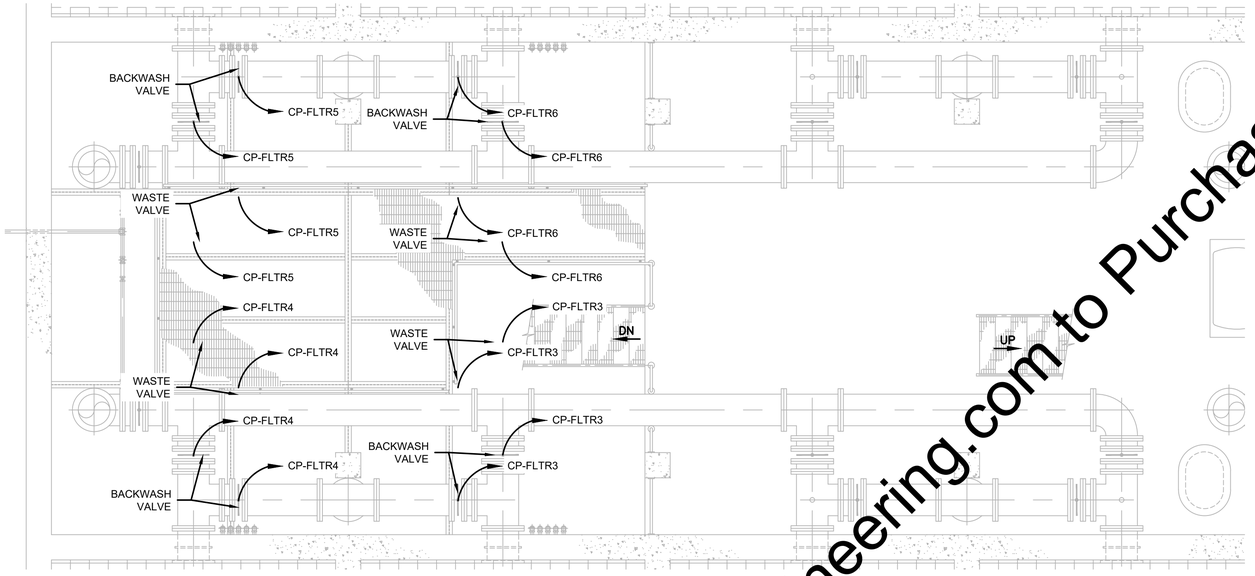

MIDLEVEL ELECTRICAL PLAN AT ELEVATION 820.00

0 2 4 8 FT 1/4"=1'-0"

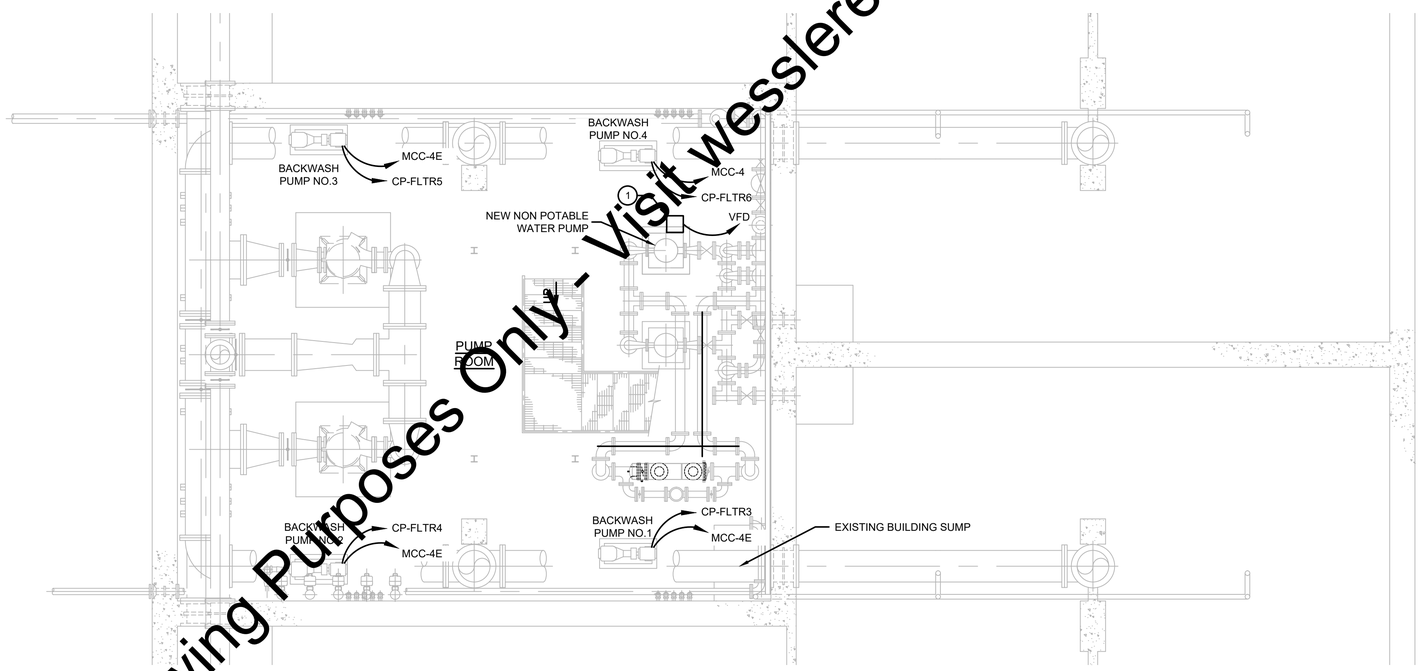

LOWER LEVEL ELECTRICAL PLAN AT ELEVATION 814.00

0 2 4 8 FT 1/4"=1'-0"

NOTES:

1 SEE ONE-LINE DIAGRAMS AND PANEL SCHEDULES FOR CONDUIT AND WIRE REQUIREMENTS.

KEYED NOTES:

1 30A, 480V, 3-POLE, NEMA 4X, SST, NFSS

"For Vewing Purposes Only - Visit wesslerengineering.com to Purchase"

SCALE VERIFICATION	DRAWN BY	EAS
BAR IS ONE INCH LONG ON ORIGINAL DRAWING	CHECKED BY	WCM
	APPROVED BY	WCM
	ISSUE DATE	MARCH 2020
	PROJECT NUMBER	193216-04-001

NO.	DATE	INITIALS	REVISION DESCRIPTIONS

WAYNE C. MOORE REGISTERED No. 10707476 STATE OF INDIANA PROFESSIONAL ENGINEER 03/04/2020

WESSLER ENGINEERING
More than a Project™

WASTEWATER SYSTEM EXPANSION

CITY OF FRANKFORT, INDIANA
CONTRACT A - WASTEWATER TREATMENT PLANT

EXISTING FILTER BUILDING - POWER PLAN

SHEET NO. **10E1**

PAGE NO. 123

Drawing: J:\Frankfort\Projects\193216 Frankfort WWTP Exp\CAD 04-001\DWG\Sheets\Area 10 - EX-FB\10E FB-EL.dwg | Layout: 10E1 | Plotted: 03/04/20 @ 10:13:17 | LastSavedBy: MikeN

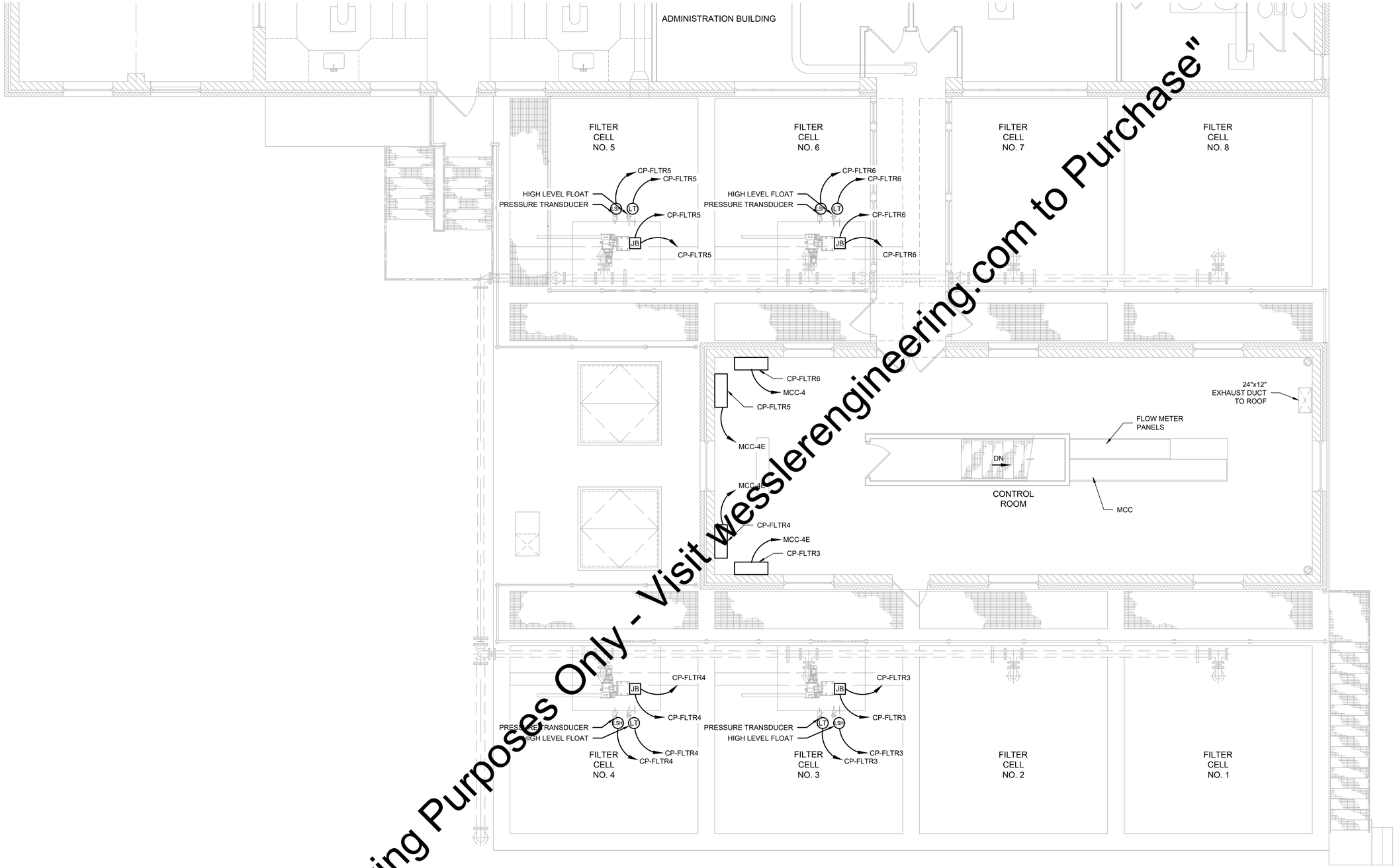

FILTER BUILDING - UPPRER LEVEL ELECTRICAL PLAN

0 2 4 8 FT
1/4"=1'-0"

"For Vewing Purposes Only - Visit wesslerengineering.com to Purchase"

SCALE VERIFICATION	DRAWN BY	EAG
BAR IS ONE INCH LONG ON ORIGINAL DRAWING	CHECKED BY	WCM
	APPROVED BY	WCM
	ISSUE DATE	MARCH 2020
	PROJECT NUMBER	193216-04-001

NO.	DATE	INITIALS	REVISION DESCRIPTIONS

WAYNE C. MOORE REGISTERED No. 10707476 STATE OF INDIANA PROFESSIONAL ENGINEER 03/04/2020

WESSLER ENGINEERING
More than a Project™

WASTEWATER SYSTEM EXPANSION

CITY OF FRANKFORT, INDIANA
CONTRACT A - WASTEWATER TREATMENT PLANT

EXISTING FILTER BUILDING - POWER PLAN

SHEET NO.
10E2

PAGE NO.
124

Drawing: J:\Frankfort\Projects\193216 Frankfort WWTP Exp\CAD 04-001\DWG\Sheets\Area 10 - EX-FB\10E FB-EL.dwg | Layout: 10E2 | Plotted: 03/05/20 @ 12:27:02 | LastSavedBy: MikeN

WASTEWATER SYSTEM EXPANSION

FOR THE

CITY OF FRANKFORT, INDIANA

CONTRACT A - WASTEWATER TREATMENT PLANT

VOLUME II

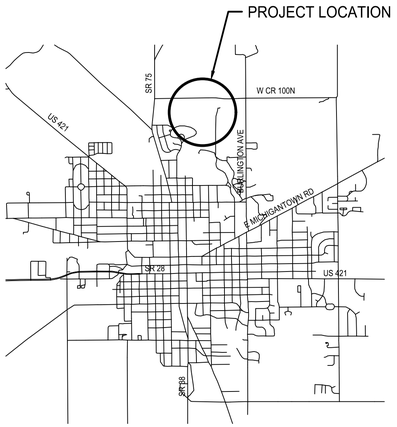

FRANKFORT
VICINITY MAP
SCALE: NONE

STATE LOCATION MAP
SCALE: NONE

CITY COUNCIL

JUDITH SHEETS	MAYOR
MEGAN SHEETS	MEMBER
MICHAEL BRITE	MEMBER
STEVE BEARDSLEY	MEMBER
JOE PALMER	MEMBER
ERIC WOODS	MEMBER
BRANDT FULLER	MEMBER
CLARENCE WARTHAN	MEMBER

UTILITIES SERVICE BOARD

MIKE KELLEY	PRESIDENT
KENT BREWER	VICE PRESIDENT
RICK GUNYON	MEMBER
MIKE REEDER	MEMBER
JOE ROOT	MEMBER

WASTEWATER SUPERINTENDENT

MIKE BECK

WESSLER ENGINEERING
More than a Project™
INDIANAPOLIS
6219 South East Street
Indianapolis, Indiana 46227
Phone: (317) 788-4551 - Fax: (317) 788-4553
www.wesslerengineering.com

PROJECT NO. 193216-04-001

MARCH 2020

ROBERT W. HOLDEN II
PROJECT MANAGER
REGISTERED ENGINEER STATE OF INDIANA NO. 10000096

JEFFREY ROSS BALLARD
PROJECT MANAGER
REGISTERED ENGINEER STATE OF INDIANA NO. 60860191
STRUCTURAL

WAYNE C. MOORE
PROJECT MANAGER
REGISTERED ENGINEER STATE OF INDIANA NO. 10707476
ELECTRICAL

DANIEL THOMAS MILES
PROJECT MANAGER
REGISTERED ENGINEER STATE OF INDIANA NO. 10302029
MECHANICAL - HVAC

"For Viewing Purposes Only - Visit wesslerengineering.com to purchase"

Drawing: J:\Frankfort\Projects\193216 Frankfort WWTP Exp\CAD 04-001\DWG\Sheets\Area 1 - Gen\1G-GS.dwg | Layout: COVER SHEET (VOL 2) | Plotted: 03/05/20 @ 12:36:01 | LastSavedBy: MikeN

DRAWING INDEX

FRANKFORT WASTEWATER TREATMENT FACILITY IMPROVEMENTS PROJECT

SHEET TYPE DEFINITIONS:

G - GENERAL
D - DEMOLITION
A - ARCHITECTURAL
C - CIVIL/PROCESS
S - STRUCTURAL
M - HEATING, VENTILATION AND AIR CONDITIONING
P - PLUMBING
E - ELECTRICAL
I - INSTRUMENTATION AND CONTROL
Y - SITE

SHEET NUMBER	AREA	SHEET TYPE	NUMBER	SHEET DESIGNATION	
VOLUME 2					
125	1	G	1.1	1G1.1	COVER SHEET - VOLUME 2
126	1	G	3.0	1G3	DRAWING INDEX - VOLUME 2
EXISTING CHLORINE CONTACT TANK (AREA 11)					
127	11	C	1.0	11C1	EXISTING CHLORINE CONTACT TANK MODIFICATION - PLAN
128	11	C	2.0	11C2	EXISTING CHLORINE CONTACT TANK MODIFICATION - SECTIONS
129	11	E	1.0	11E1	EXISTING CHLORINE CONTACT TANK - POWER PLANS
EXISTING ANAEROBIC DIGESTERS MODIFICATIONS (AREA 12)					
130	12	D	1.0	12D1	EXISTING ANAEROBIC DIGESTERS - OPERATIONS LEVEL DEMOLITION PLAN
131	12	D	2.0	12D2	EXISTING ANAEROBIC DIGESTERS - DEMOLITION SECTIONS
132	12	D	3.0	12D3	EXISTING SLUDGE PROCESS BUILDING - DEMOLITON PLANS
133	12	C	1.0	12C1	EXISTING ANAEROBIC DIGESTERS - OPERATIONS LEVEL MODIFICATION PLAN
134	12	C	2.0	12C2	EXISTING ANAEROBIC DIGESTERS - MODIFICATIONS TOP PLAN
135	12	C	3.0	12C3	EXISTING ANAEROBIC DIGESTERS - MODIFICATIONS SECTIONS
136	12	C	4.0	12C4	EXISTING SLUDGE PROCESS BUILDING - MODIFICATIONS PLANS
137	12	C	5.0	12C5	EXISTING SLUDGE PROCESS BUILDING - MODIFICATIONS SECTIONS
138	12	C	6.0	12C6	SLUDGE PROCESS PIPING AND NPW SCHEMATIC
139	12	C	7.0	12C7	GAS PIPING SCHEMATIC
140	12	S	1.0	12S1	SLUDGE PROCESS BUILDING - STRUCTURAL
141	12	E	1.0	12E1	EXISTING ANAEROBIC DIGESTERS MODIFICATIONS - ELECTRICAL PLAN
142	12	E	2.0	12E2	EXISTING ANAEROBIC DIGESTERS MODIFICATIONS - POWER PLAN
143	12	E	3.0	12E3	EXISTING SLUDGE PROCESS BUILDING - POWER PLAN
NEW THICKENING AND DEWATERING BUILDING (AREA 13)					
144	13	G	1.0	13G1	NEW THICKENING AND DEWATERING BUILDING - PERSPECTIVE VIEWS
145	13	A	1.0	13A1	NEW THICKENING AND DEWATERING BUILDING - LOWER LEVEL PLAN
146	13	A	2.0	13A2	NEW THICKENING AND DEWATERING BUILDING - UPPER LEVEL PLAN
147	13	A	3.0	13A3	NEW THICKENING AND DEWATERING BUILDING - ROOF PLAN
148	13	A	4.0	13A4	NEW THICKENING AND DEWATERING BUILDING - ELEVATIONS
149	13	C	1.0	13C1	NEW THICKENING AND DEWATERING BUILDING - LOWER LEVEL PLAN
150	13	C	2.0	13C2	NEW THICKENING AND DEWATERING BUILDING - UPPER LEVEL PLAN
151	13	C	3.0	13C3	NEW THICKENING AND DEWATERING BUILDING - SECTION
152	13	C	4.0	13C4	NEW THICKENING AND DEWATERING BUILDING - SECTION
153	13	C	5.0	13C5	NEW THICKENING AND DEWATERING BUILDING - SECTION
154	13	C	6.0	13C6	NEW THICKENING AND DEWATERING BUILDING - SECTION AND DETAILS
155	13	S	1.0	13S1	NEW THICKENING AND DEWATERING BUILDING - FOUNDATION PLAN
156	13	S	2.0	13S2	NEW THICKENING AND DEWATERING BUILDING - FRAMING PLAN
157	13	S	3.0	13S3	NEW THICKENING AND DEWATERING BUILDING - ROOF FRAMING PLAN
158	13	S	4.0	13S4	NEW THICKENING AND DEWATERING BUILDING - STRUCTURAL SECTIONS
159	13	S	5.0	13S5	NEW THICKENING AND DEWATERING BUILDING - STRUCTURAL SECTIONS
160	13	S	6.0	13S6	NEW THICKENING AND DEWATERING BUILDING - STRUCTURAL ELEVATIONS
161	13	M	1.0	13M1	NEW THICKENING AND DEWATERING BUILDING - MECHANICAL PLANS
162	13	M	2.0	13M2	NEW THICKENING AND DEWATERING BUILDING - MECHANICAL PLANS
163	13	M	3.0	13M3	NEW THICKENING AND DEWATERING BUILDING - MECHANICAL DETAILS AND SCHEDULES
164	13	P	1.0	13P1	NEW THICKENING AND DEWATERING BUILDING - PLUMBING PLAN
165	13	P	2.0	13P2	NEW THICKENING AND DEWATERING BUILDING - PLUMBING ISOMETRIC AND DETAILS
166	13	E	1.0	13E1	NEW THICKENING AND DEWATERING BUILDING - LOWER LEVEL POWER PLAN
167	13	E	2.0	13E2	NEW THICKENING AND DEWATERING BUILDING - UPPER LEVEL POWER PLAN
168	13	E	3.0	13E3	NEW THICKENING AND DEWATERING BUILDING - ROOF LEVEL POWER PLAN
169	13	E	4.0	13E4	NEW THICKENING AND DEWATERING BUILDING - LOWER LEVEL LIGHTING PLAN
170	13	E	5.0	13E5	NEW THICKENING AND DEWATERING BUILDING - UPPER LEVEL LIGHTING PLAN
NEW LONG TERM BIOSOLIDS STORAGE BUILDING (AREA 14)					
171	14	G	1.0	14G1	NEW LONG TERM BIOSOLIDS STORAGE BUILDING - PERSPECTIVE VIEW
172	14	C	1.0	14C1	NEW LONG TERM BIOSOLIDS STORAGE BUILDING - OVERALL PLAN AND PIPING SCHEMATIC
173	14	C	2.0	14C2	NEW LONG TERM BIOSOLIDS STORAGE BUILDING - PARTIAL PLAN NORTH
174	14	C	3.0	14C3	NEW LONG TERM BIOSOLIDS STORAGE BUILDING - PARTIAL PLAN SOUTH
175	14	C	4.0	14C4	NEW LONG TERM BIOSOLIDS STORAGE BUILDING - SECTIONS
176	14	C	5.0	14C5	NEW LONG TERM BIOSOLIDS STORAGE BUILDING - ELEVATIONS
177	14	S	1.0	14S1	NEW LONG TERM BIOSOLIDS STORAGE BUILDING - FOUNDATION PLAN
178	14	S	2.0	14S2	NEW LONG TERM BIOSOLIDS STORAGE BUILDING - CONTROL JOINT PLAN
179	14	S	3.0	14S3	NEW LONG TERM BIOSOLIDS STORAGE BUILDING - SECTIONS AND DETAILS
180	14	E	1.0	14E1	NEW LONG TERM BIOSOLIDS STORAGE BUILDING - POWER AND LIGHTING PLAN

DRAWING INDEX

FRANKFORT WASTEWATER TREATMENT FACILITY IMPROVEMENTS PROJECT

SHEET TYPE DEFINITIONS:

G - GENERAL
D - DEMOLITION
A - ARCHITECTURAL
C - CIVIL/PROCESS
S - STRUCTURAL
M - HEATING, VENTILATION AND AIR CONDITIONING
P - PLUMBING
E - ELECTRICAL
I - INSTRUMENTATION AND CONTROL
Y - SITE

SHEET NUMBER	AREA	SHEET TYPE	NUMBER	SHEET DESIGNATION	
EXISTING ADMINISTRATION BUILDING MODIFICATIONS (AREA 15)					
181	15	D	1.0	15D1	EXISTING ADMINISTRATION BUILDING UPPER AND LOWER LEVEL - DEMOLITION PLANS
182	15	C	1.0	15C1	EXISTING ADMINISTRATION BUILDING UPPER AND LOWER - MODIFICATIONS PLANS
183	15	E	1.0	15E1	EXISTING ADMINISTRATION BUILDING UPPER AND LOWER - POWER PLANS
MISCELLANEOUS DETAILS (AREA 16)					
184	16	Y	1.0	16Y1	MISCELLANEOUS SITE DETAILS
185	16	Y	2.0	16Y2	MISCELLANEOUS SITE DETAILS
186	16	Y	3.0	16Y3	MISCELLANEOUS SITE DETAILS
187	16	C	1.0	16C1	PROCESS VALVE SCHEDULE
188	16	C	2.0	16C2	MISCELLANEOUS DETAILS
189	16	C	3.0	16C3	MISCELLANEOUS DETAILS
190	16	C	4.0	16C4	DOOR AND WINDOW SCHEDULE AND DETAILS
191	16	S	1.0	16S1	TYPICAL STRUCTURAL DETAILS
192	16	S	2.0	16S2	TYPICAL STRUCTURAL DETAILS
193	16	S	3.0	16S3	TYPICAL STRUCTURAL DETAILS
194	16	S	4.0	16S4	TYPICAL STRUCTURAL DETAILS
195	16	S	5.0	16S5	TYPICAL STRUCTURAL DETAILS
196	16	S	6.0	16S6	TYPICAL STRUCTURAL DETAILS
197	16	E	1.0	16E1	PANEL SCHEDULES
198	16	E	2.0	16E2	PANEL SCHEDULES
199	16	E	3.0	16E3	ELECTRICAL DETAILS
200	16	E	4.0	16E4	ELECTRICAL DETAILS
201	16	EC	1.0	16EC1	EROSION CONTROL DETAILS
202	16	EC	2.0	16EC2	EROSION CONTROL DETAILS - NEW GRADING PLAN
ELECTRICAL (AREA 17)					
203	17	E	1.0	17E1	OVERALL ELECTRICAL ONE-LINE
204	17	E	2.0	17E2	17E ELECT ONE-LINE DIAGRAM #1
205	17	E	3.0	17E3	EXISTING LAGOON PUMP STATION ONE-LINE DIAGRAM
206	17	E	4.0	17E4	EXISTING PRIMARY SLUDGE PUMP ROOM ONE-LINE DIAGRAM
207	17	E	5.0	17E5	AERATION BUILDING MCC-2 AND MCC-2E ONE-LINE DEMO
208	17	E	6.0	17E6	AERATION BUILDING PP-AER AND PP-AER-E ONE-LINE DIAGRAM
209	17	E	7.0	17E7	SECONDARY CONTROL BUILDING ONE-LINE DIAGRAM
210	17	E	8.0	17E8	FILTER BUILDING MCC-4 AND MCC-4E ONE-LINE DIAGRAM
211	17	E	9.0	17E9	THICKENING AND DEWATERING BUILDING ONE-LINE DIAGRAM
212	17	E	10.0	17E10	SECONDARY CONTROL BUILDING ONE-LINE DIAGRAM
213	17	E	11.0	17E11	DIGESTER CONTROL BUILDING ONE-LINE DIAGRAM
214	17	E	12.0	17E12	CONTROL ONE-LINE DIAGRAMS
215	17	E	13.0	17E13	CONTROL ONE-LINE DIAGRAMS
216	17	E	14.0	17E14	CONTROL ONE-LINE DIAGRAMS
217	17	E	15.0	17E15	CONTROL ONE-LINE DIAGRAMS
218	17	E	16.0	17E16	CONTROL ONE-LINE DIAGRAMS
219	17	E	17.0	17E17	CONTROL ONE-LINE DIAGRAMS
INSTRUMENTATION AND CONTROL (AREA 18)					
220	18	N	1.0	18N1	PIPING AND INSTRUMENTATION DRAWING HEADWORKS
221	18	N	2.0	18N2	PIPING AND INSTRUMENTATION DRAWING EQUALIZATION LAGOONS
222	18	N	3.0	18N3	PIPING AND INSTRUMENTATION DRAWING AERATION
223	18	N	4.0	18N4	PIPING AND INSTRUMENTATION DRAWING SECONDARY CLARIFIERS AND WAS
224	18	N	5.0	18N5	PIPING AND INSTRUMENTATION DRAWING TERTIARY FILTERS
225	18	N	6.0	18N6	PIPING AND INSTRUMENTATION DRAWING THICKENING AND DEWATERING
226	18	N	7.0	18N7	PIPING AND INSTRUMENTATION DRAWING DIGESTERS AND SLUDGE PROCESS
227	18	N	8.0	18N8	PIPING AND INSTRUMENTATION DRAWING CHLORINE CONTACT TANK
228	18	N	9.0	18N9	PIPING AND INSTRUMENTATION DRAWING NETWORK DIAGRAM

"For Viewing Purposes Only - Visit wesslerengineering.com to Purchase"

SCALE VERIFICATION	DRAWN BY	MLN
BAR IS ONE INCH LONG ON ORIGINAL DRAWING	CHECKED BY	CLT
	APPROVED BY	RWH
	ISSUE DATE	MARCH 2020
	PROJECT NUMBER	193216-04-001

NO.	DATE	INITIALS	REVISION DESCRIPTIONS

ROBERT W. HOLDEN II REGISTERED No. 10000096 STATE OF INDIANA PROFESSIONAL ENGINEER 03/04/2020

WESSLER ENGINEERING
More than a Project™

WASTEWATER SYSTEM EXPANSION

CITY OF FRANKFORT, INDIANA
CONTRACT A - WASTEWATER TREATMENT PLANT

DRAWING INDEX VOLUME 2

SHEET NO. **1G3**

PAGE NO. 126

Drawing: J:\Frankfort\Projects\193216 Frankfort WWTP Exp\CAD 04-001\DWG\Sheets\Area 1 - Gen\1G-GS.dwg | Layout: DRAWING INDEX VOLUME 2-1G3 | Plotted: 03/05/20 @ 12:36:44 | LastSavedBy: MikeN

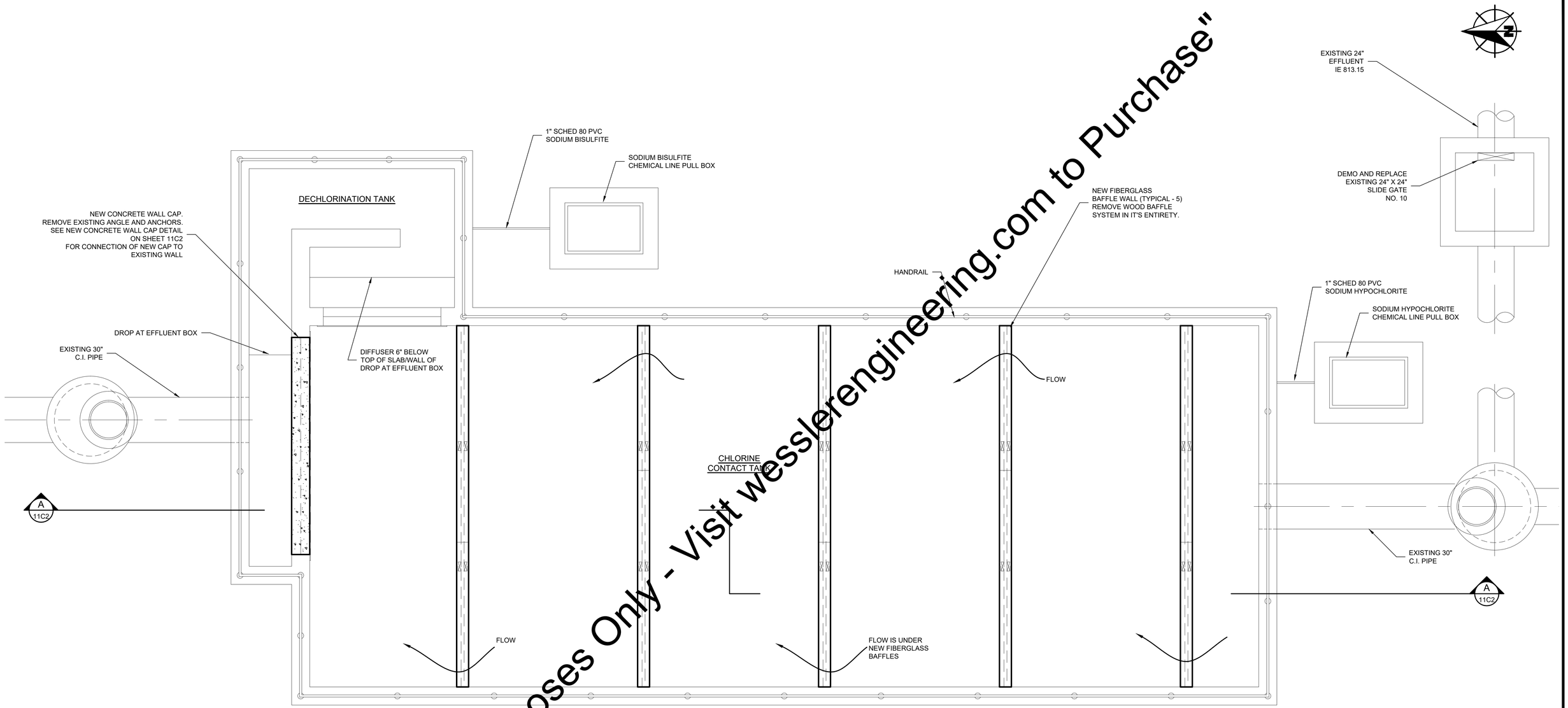

MODIFICATION PLAN

0 2 4 6 FT
3/8"=1'-0"

LEGEND

EXISTING FEATURES
NEW FEATURES

"For Viewing Purposes Only - Visit wesslerengineering.com to Purchase"

SCALE VERIFICATION	DRAWN BY	TWL
BAR IS ONE INCH LONG ON ORIGINAL DRAWING	CHECKED BY	CLT
	APPROVED BY	RWH
	ISSUE DATE	MARCH 2020
	PROJECT NUMBER	193216-04-001

NO.	DATE	INITIALS	REVISION DESCRIPTIONS
	EXISTING		

ROBERT W. HOLDEN, II
REGISTERED
No. 10000096
STATE OF INDIANA
PROFESSIONAL ENGINEER
03/04/2020

WESSLER ENGINEERING
More than a Project™

WASTEWATER SYSTEM EXPANSION
CITY OF FRANKFORT, INDIANA
CONTRACT A - WASTEWATER TREATMENT PLANT

EXISTING CHLORINE CONTACT TANK - MODIFICATION PLAN

SHEET NO.
11C1

PAGE NO.
127

Drawing: J:\Frankfort\Projects\193216 Frankfort WWTP Exp\CAD 04-001\DWG\Sheets\Area 11 - EX-CL\11C CL-TANK-MOD.dwg | Layout: EXISTING CHLORINE CONTACT TANK - MODIFICATION PLAN | Plotted: 02/28/20 @ 11:15:22 | LastSavedBy: TravisL

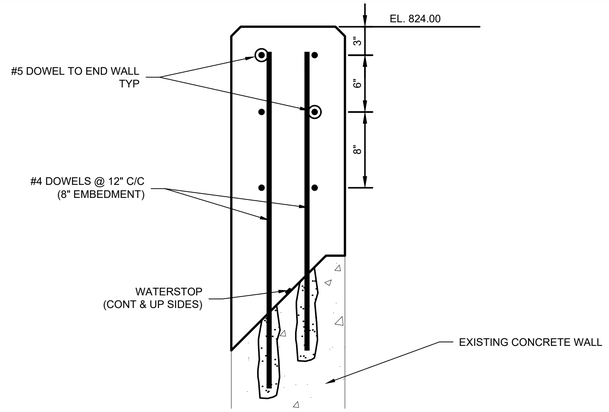

NEW CONCRETE WALL CAP

0 1 2 3 FT
3/4"=1'-0"

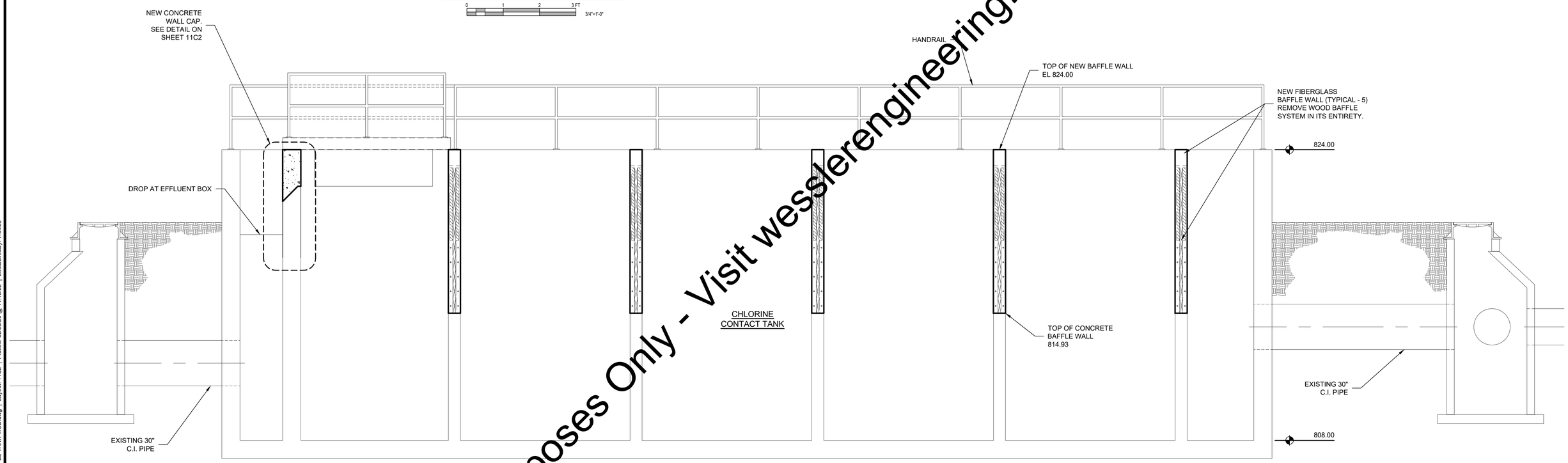

SECTION A 11C1

0 2 4 6 FT
3/8"=1'-0"

LEGEND

EXISTING FEATURES

NEW FEATURES

"For Viewing Purposes Only - Visit wesslerengineering.com to Purchase"

SCALE VERIFICATION	DRAWN BY	TWL
BAR IS ONE INCH LONG ON ORIGINAL DRAWING	CHECKED BY	ALT
	APPROVED BY	RWH
	ISSUE DATE	MARCH 2020
	PROJECT NUMBER	193216-04-001

NO.	DATE	INITIALS	REVISION DESCRIPTIONS
	EXISTING		

ROBERT W. HOLDEN, II REGISTERED No. 10000096 STATE OF INDIANA PROFESSIONAL ENGINEER 03/04/2020

WESSLER ENGINEERING
More than a Project™

WASTEWATER SYSTEM EXPANSION

CITY OF FRANKFORT, INDIANA
CONTRACT A - WASTEWATER TREATMENT PLANT

EXISTING CHLORINE CONTACT TANK MODIFICATION - SECTION

SHEET NO. **11C2**

PAGE NO. 128

Drawing: J:\Frankfort\Projects\193216 Frankfort WWTP Exp\CAD 04-001\DWG\Sheets\Area 11 - EX-CL\11C CL-TANK-MOD.dwg | Layout: 11C2 | Plotted: 02/28/20 @ 11:15:22 | LastSavedBy: TravisL

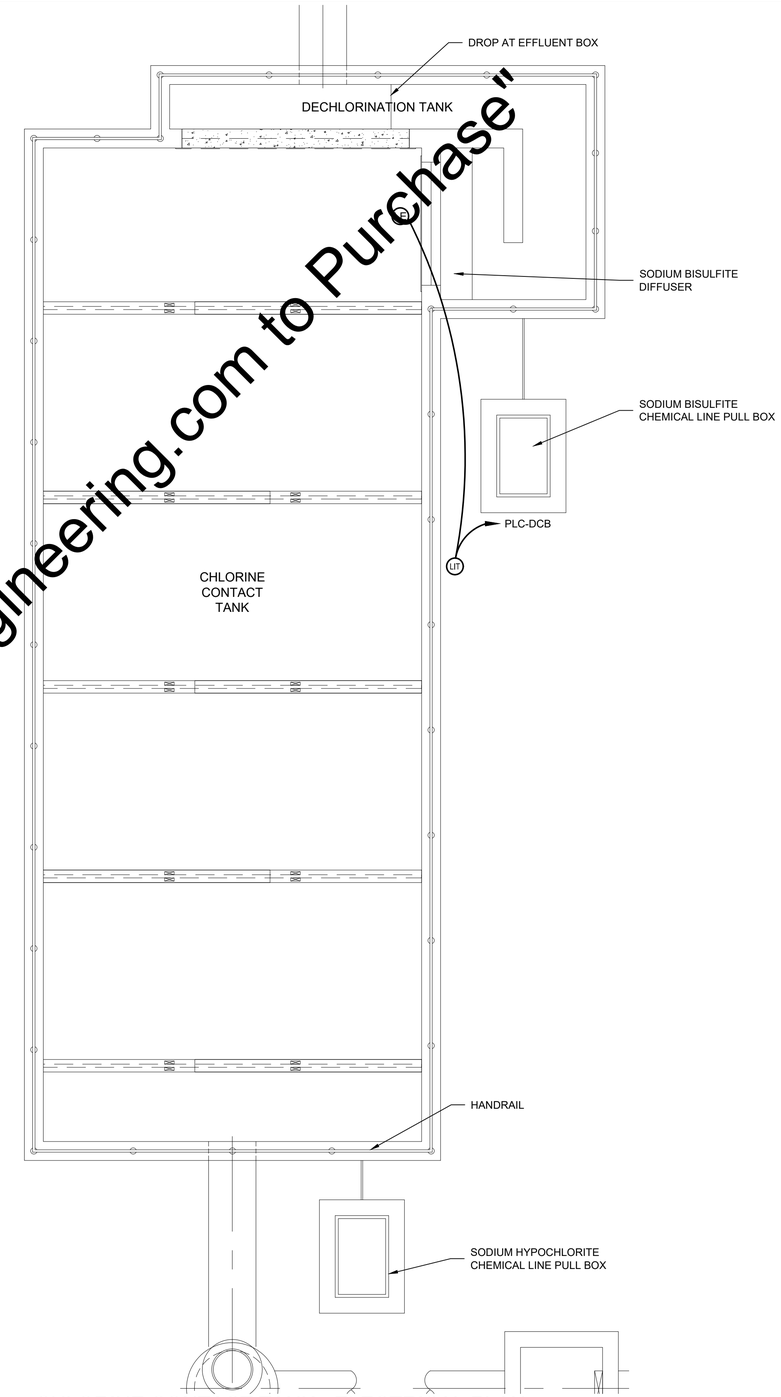

CHLORINE CONTACT TANK - ELECTRICAL PLAN

"For Viewing Purposes Only - Visit wesslerengineering.com to Purchase"

0 2 4 8 FT
1/4"=1'-0"

SCALE VERIFICATION	DRAWN BY	EAS
BAR IS ONE INCH LONG ON ORIGINAL DRAWING	CHECKED BY	WCM
	APPROVED BY	WCM
	ISSUE DATE	MARCH 2020
	PROJECT NUMBER	193216-04-001

NO.	DATE	INITIALS	REVISION DESCRIPTIONS

WAYNE C. MOORE REGISTERED No. 10707476 STATE OF INDIANA PROFESSIONAL ENGINEER
03/04/2020

WESSLER ENGINEERING
More than a Project™

WASTEWATER SYSTEM EXPANSION
CITY OF FRANKFORT, INDIANA
CONTRACT A - WASTEWATER TREATMENT PLANT

EXISTING CHLORINE CONTACT TANK POWER PLANS

SHEET NO.
11E1

Drawing: J:\FrankfortProjects\193216 Frankfort WWTP Exp\CAD 04-001DWG\Sheets\Area 11 - EX-CL\11E CL-TANK-EL.dwg | Layout: 11E1 | Plotted: 03/02/20 @ 03:31:39 | LastSavedBy: JasonW

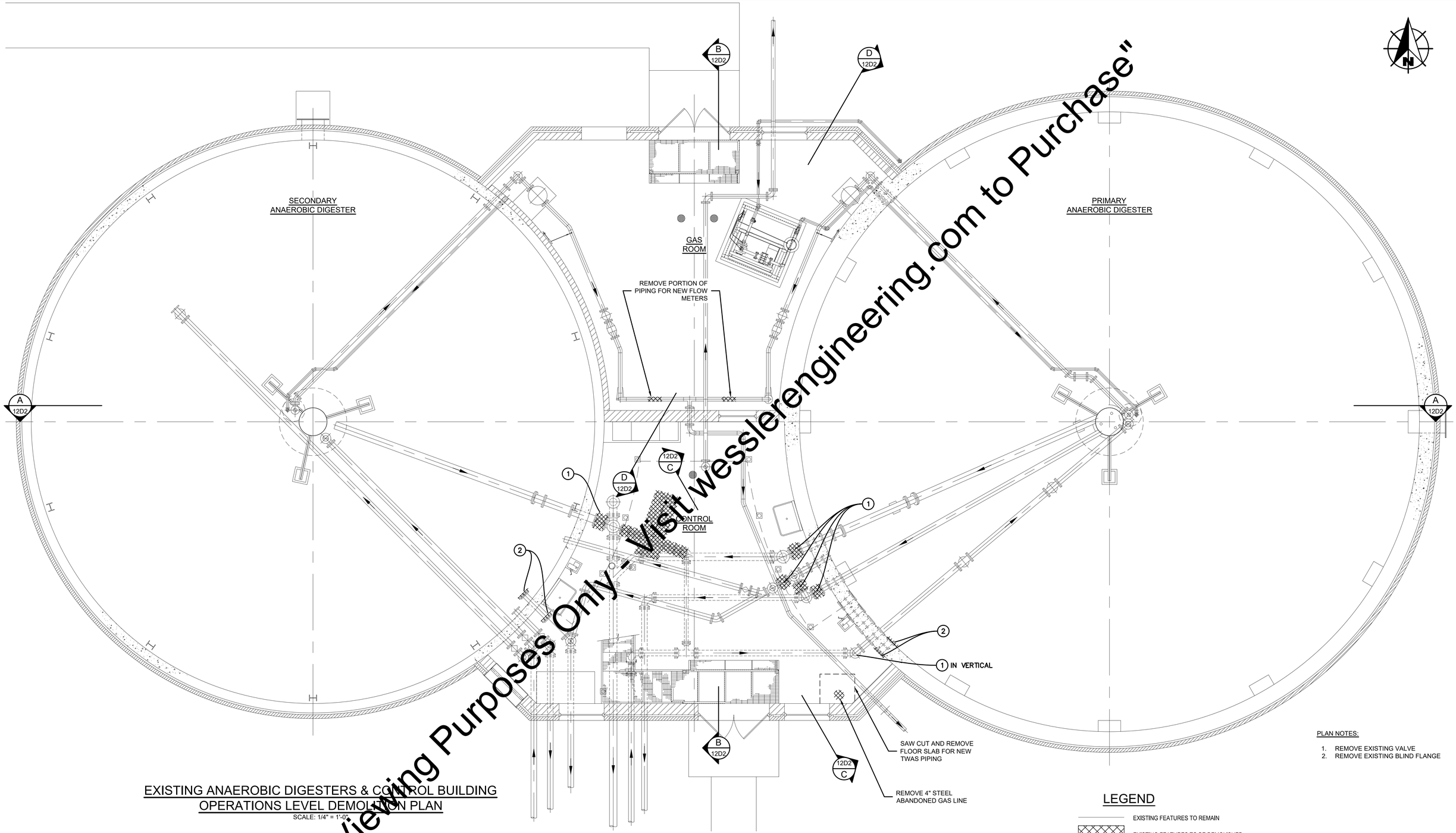

EXISTING ANAEROBIC DIGESTERS & CONTROL BUILDING
OPERATIONS LEVEL DEMOLITION PLAN
SCALE: 1/4" = 1'-0"

PLAN NOTES:

1. REMOVE EXISTING VALVE
2. REMOVE EXISTING BLIND FLANGE

LEGEND

EXISTING FEATURES TO REMAIN

EXISTING FEATURES TO BE DEMOLISHED

"For Viewing Purposes Only - Visit wesslerengineering.com to Purchase"

SCALE VERIFICATION	DRAWN BY	TWL
BAR IS ONE INCH LONG ON ORIGINAL DRAWING	CHECKED BY	CLR
	APPROVED BY	RWH
	ISSUE DATE	MARCH 2020
	PROJECT NUMBER	193216-04-001

NO.	DATE	INITIALS	REVISION DESCRIPTIONS

ROBERT W. HOLDEN, II REGISTERED No. 10000096 STATE OF INDIANA PROFESSIONAL ENGINEER 03/04/2020

WESSLER ENGINEERING
More than a Project™

WASTEWATER SYSTEM EXPANSION

CITY OF FRANKFORT, INDIANA
CONTRACT A - WASTEWATER TREATMENT PLANT

EXISTING ANAEROBIC DIGESTERS
OPERATIONS LEVEL DEMOLITION PLAN

SHEET NO.
12D1

PAGE NO.
130

Drawing: J:\Frankfort\Projects\193216 Frankfort WWTP Exp\CAD 04-001\DWG\Sheets\Area 12 - EX-DG\12D DG-DEMO.dwg | Layout: 12D1 | Plotted: 02/28/20 @ 12:52:34 | LastSavedBy: JasonW

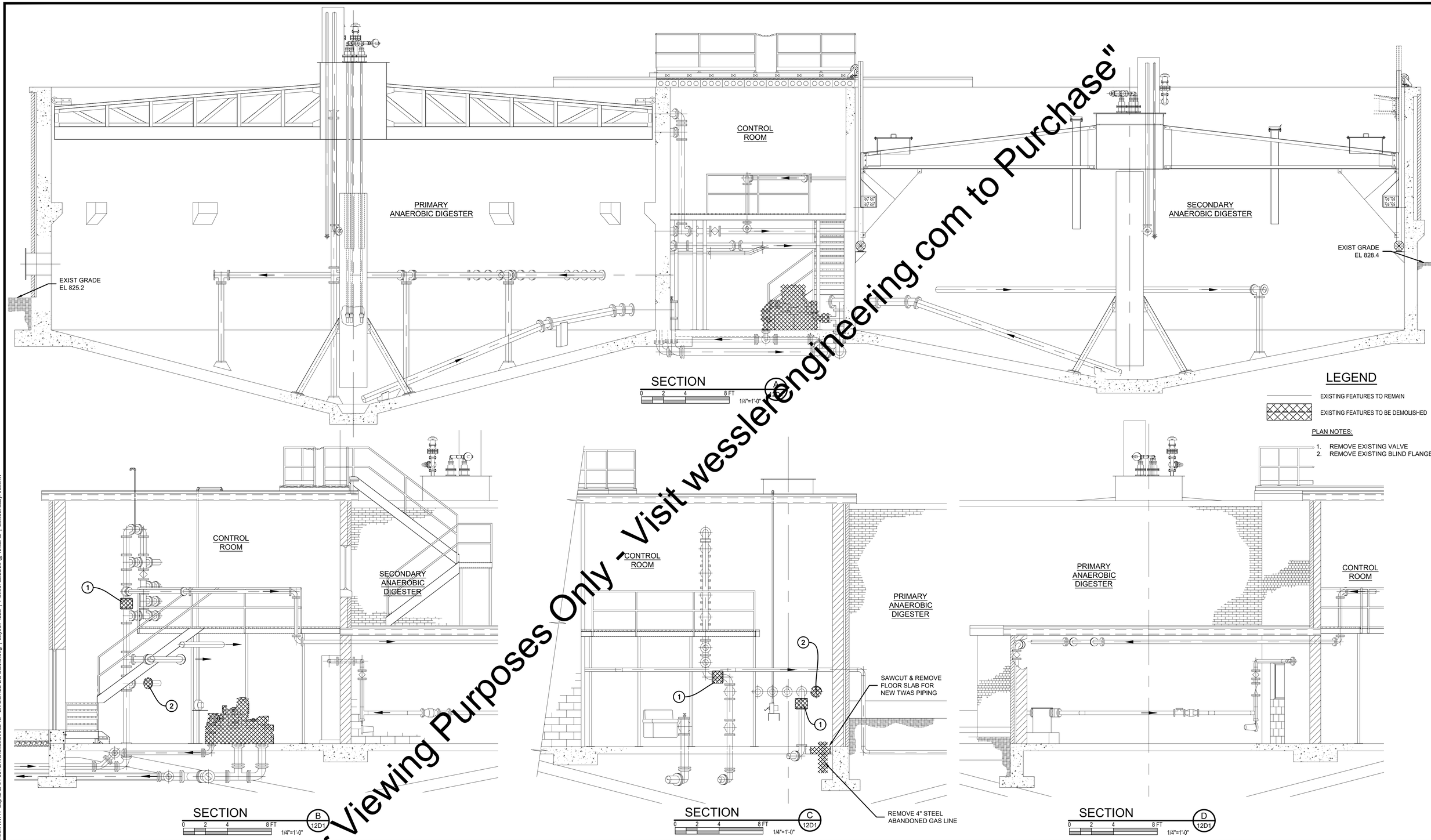

LEGEND

EXISTING FEATURES TO REMAIN

EXISTING FEATURES TO BE DEMOLISHED

PLAN NOTES:

1. REMOVE EXISTING VALVE
2. REMOVE EXISTING BLIND FLANGE

"For Viewing Purposes Only - Visit wesslerengineering.com to Purchase"

SCALE VERIFICATION	DRAWN BY	TWL
BAR IS ONE INCH LONG ON ORIGINAL DRAWING	CHECKED BY	CLR
	APPROVED BY	RWH
	ISSUE DATE	MARCH 2020
	PROJECT NUMBER	193216-04-001

NO.	DATE	INITIALS	REVISION DESCRIPTIONS

ROBERT W. HOLDEN, II REGISTERED No. 10000096 STATE OF INDIANA PROFESSIONAL ENGINEER 03/04/2020

WESSLER ENGINEERING
More than a Project™

WASTEWATER SYSTEM EXPANSION

CITY OF FRANKFORT, INDIANA
CONTRACT A - WASTEWATER TREATMENT PLANT

EXISTING ANAEROBIC DIGESTERS - DEMOLITION SECTIONS

SHEET NO.
12D2

PAGE NO.
131

Drawing: J:\Frankfort\Projects\193216 Frankfort WWTP Exp\CAD 04-001\DWG\Sheets\Area 12 - EX-DG\12D DG-DEMO.dwg | Layout: 12D2 | Plotted: 02/28/20 @ 12:52:42 | LastSavedBy: JasonW

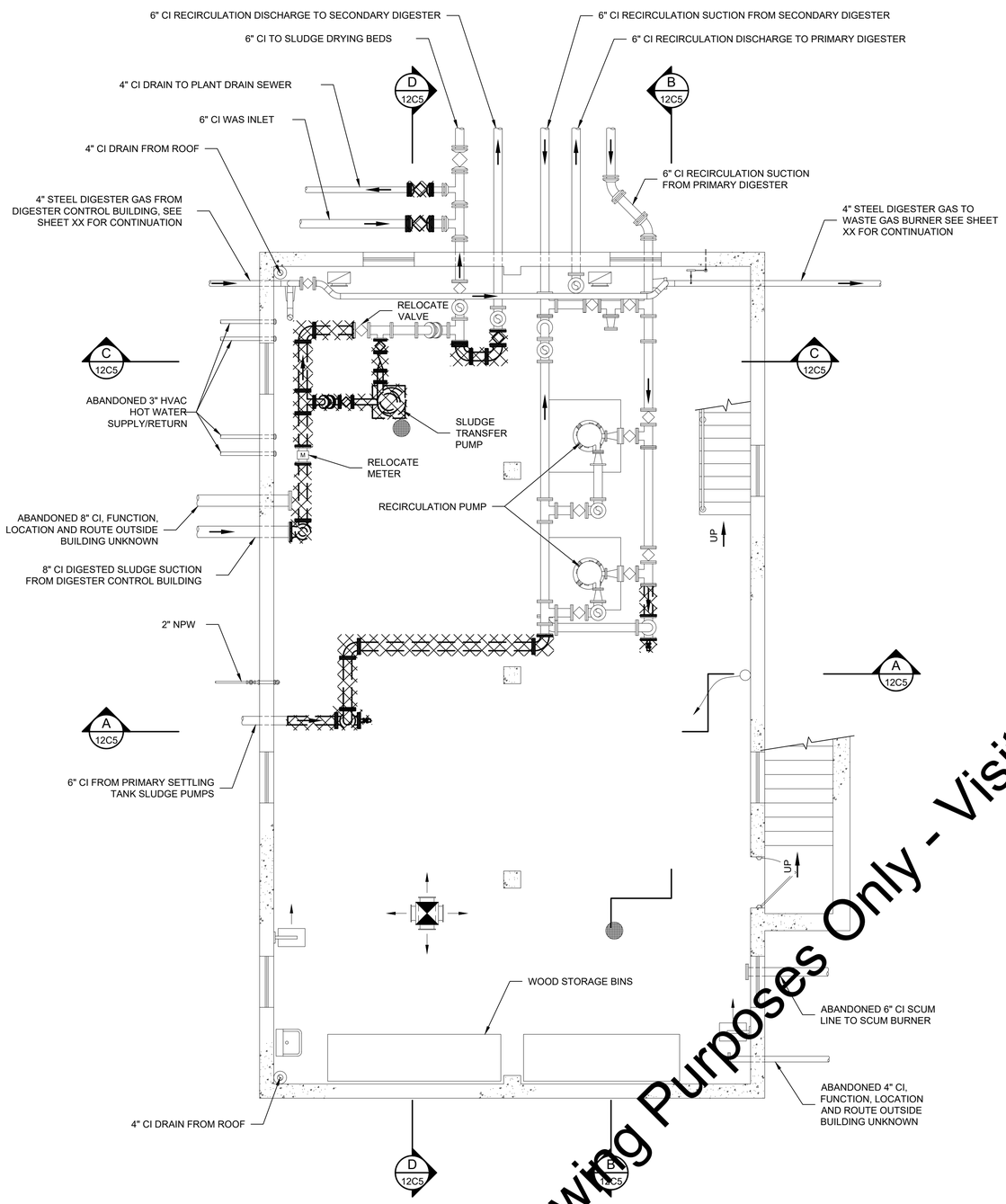

EXISTING SLUDGE PROCESS BUILDING
LOWER LEVEL DEMOLITION PLAN
SCALE: 1/4" = 1'-0"

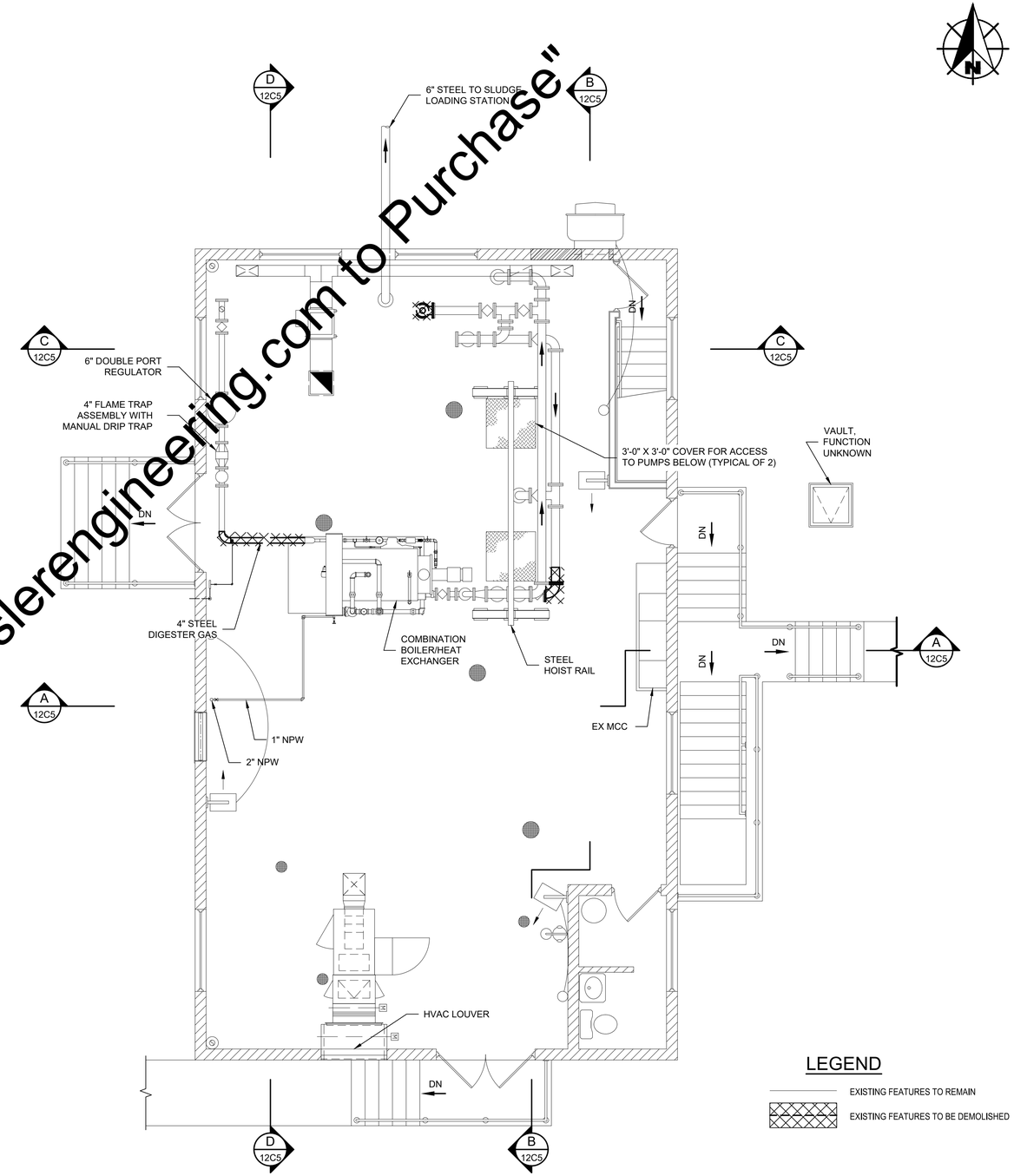

EXISTING SLUDGE PROCESS BUILDING
UPPER LEVEL DEMOLITION PLAN
SCALE: 1/4" = 1'-0"

LEGEND

- EXISTING FEATURES TO REMAIN
- EXISTING FEATURES TO BE DEMOLISHED

"For Viewing Purposes Only - Visit wesslerengineering.com to Purchase"

SCALE VERIFICATION	DRAWN BY	TWL
BAR IS ONE INCH LONG ON ORIGINAL DRAWING	CHECKED BY	DRI
	APPROVED BY	RWH
	ISSUE DATE	MARCH 2020
	PROJECT NUMBER	193216-04-001

NO.	DATE	INITIALS	REVISION DESCRIPTIONS

ROBERT W. HOLDEN II REGISTERED No. 10000096 STATE OF INDIANA PROFESSIONAL ENGINEER 03/04/2020

WESSLER ENGINEERING
More than a Project™

WASTEWATER SYSTEM EXPANSION
CITY OF FRANKFORT, INDIANA
CONTRACT A - WASTEWATER TREATMENT PLANT

EXISTING SLUDGE PROCESS BUILDING - DEMOLITION PLANS

SHEET NO. **12D3**

PAGE NO. 132

Drawing: J:\Frankfort\Projects\193216 Frankfort WWTP Exp\CAD 04-001\DWG\Sheets\Area 12 - EX-DG\12C DG-SL-BLDG-DEMO.dwg | Layout: 12D3 EXISTING SLUDGE PROCESS BUILDING - DEMOLITION PLANS | Plotted: 02/28/20 @ 12:53:01 | LastSavedBy: JasonW

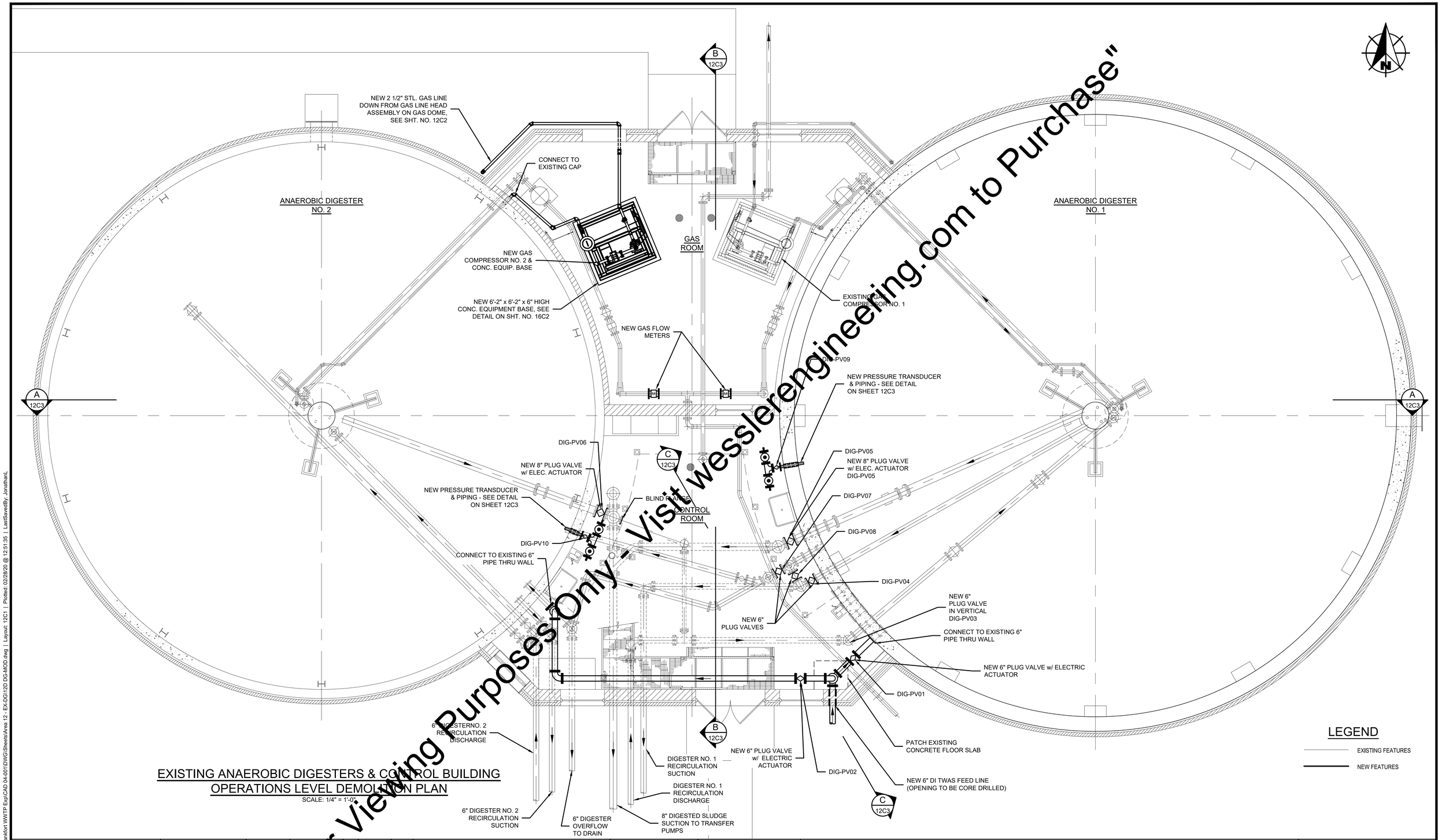

EXISTING ANAEROBIC DIGESTERS & CONTROL BUILDING
OPERATIONS LEVEL DEMOLITION PLAN
SCALE: 1/4" = 1'-0"

"For Viewing Purposes Only - Visit wesslerengineering.com to Purchase"

SCALE VERIFICATION	DRAWN BY	TWL
BAR IS ONE INCH LONG ON ORIGINAL DRAWING	CHECKED BY	CLR
	APPROVED BY	RWH
	ISSUE DATE	MARCH 2020
	PROJECT NUMBER	193216-04-001

NO.	DATE	INITIALS	REVISION DESCRIPTIONS

ROBERT W. HOLDEN, II REGISTERED No. 10000096 STATE OF INDIANA PROFESSIONAL ENGINEER 03/04/2020

WESSLER ENGINEERING
More than a Project™

WASTEWATER SYSTEM EXPANSION
CITY OF FRANKFORT, INDIANA
CONTRACT A - WASTEWATER TREATMENT PLANT

EXISTING ANAEROBIC DIGESTERS OPERATIONS LEVEL MODIFICATION PLAN

SHEET NO. **12C1**

PAGE NO. 133

Drawing: J:\Frankfort\Projects\193216 Frankfort WWTP Exp\CAD 04-001\DWG\Sheets\Area 12 - EX-DG\12D DG-MOD.dwg | Layout: 12C1 | Plotted: 02/28/20 @ 12:51:35 | LastSavedBy: JonathanL

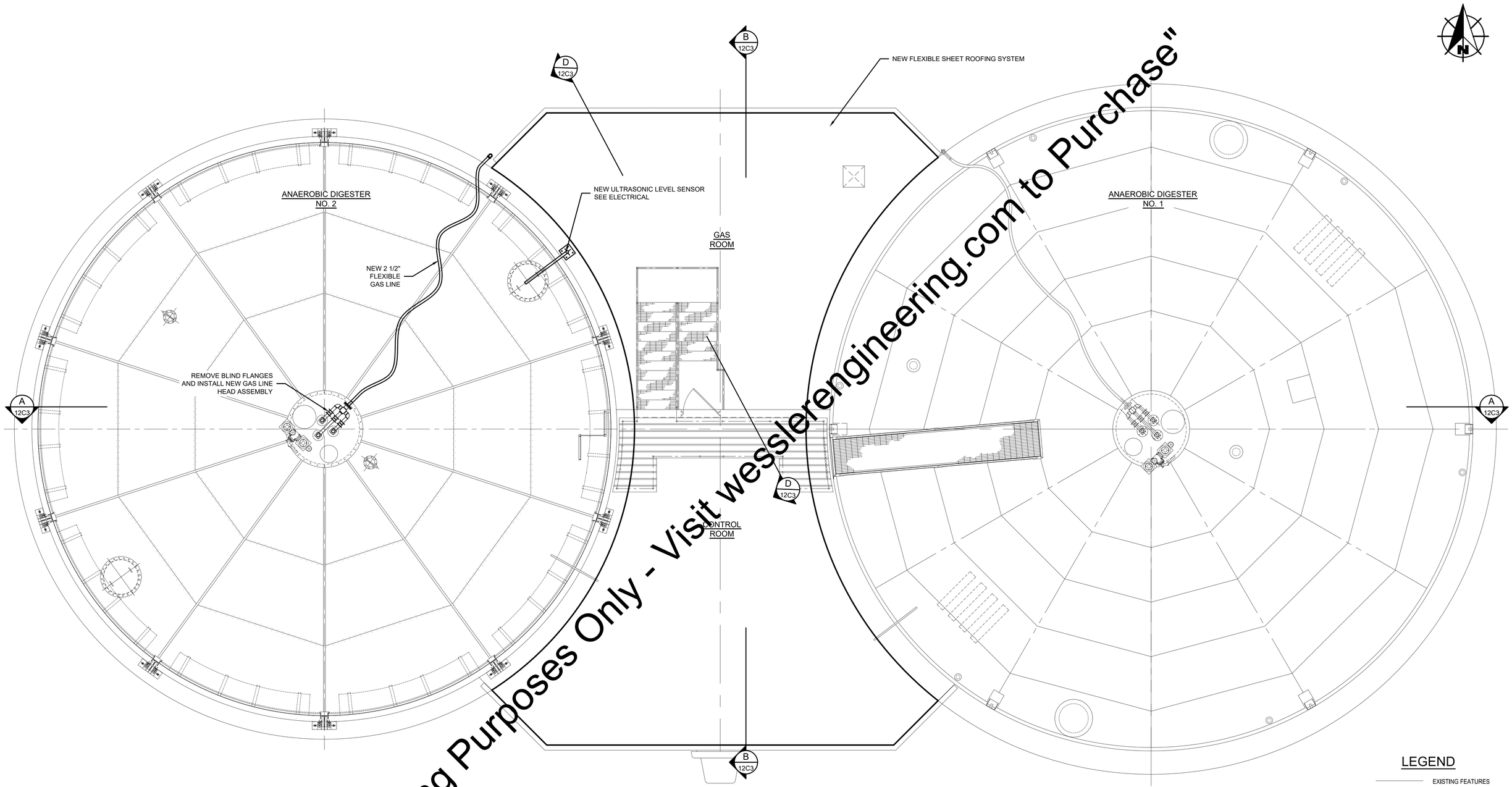

EXISTING ANAEROBIC DIGESTERS & CONTROL BUILDING
TOP LEVEL MODIFICATION PLAN
SCALE: 1/4" = 1'-0"

"For Viewing Purposes Only - Visit wesslerengineering.com to Purchase"

SCALE VERIFICATION	DRAWN BY	TWL
BAR IS ONE INCH LONG ON ORIGINAL DRAWING	CHECKED BY	CLR
	APPROVED BY	RWH
	ISSUE DATE	MARCH 2020
	PROJECT NUMBER	193216-04-001

NO.	DATE	INITIALS	REVISION DESCRIPTIONS

ROBERT W. HOLDEN, II
REGISTERED
No. 10000096
STATE OF INDIANA
PROFESSIONAL ENGINEER
03/04/2020

WESSLER ENGINEERING
More than a Project™

WASTEWATER SYSTEM EXPANSION
CITY OF FRANKFORT, INDIANA
CONTRACT A - WASTEWATER TREATMENT PLANT

EXISTING ANAEROBIC DIGESTERS - MODIFICATIONS TOP PLAN

SHEET NO.
12C2

PAGE NO.
134

Drawing: J:\Frankfort\Projects\193216 Frankfort WWTP Exp\CAD 04-001\DWG\Sheets\Area 12 - EX-DG\12D DG-MOD.dwg | Layout: 12C2 | Plotted: 03/04/20 @ 03:56:56 | LastSavedBy: MikeN

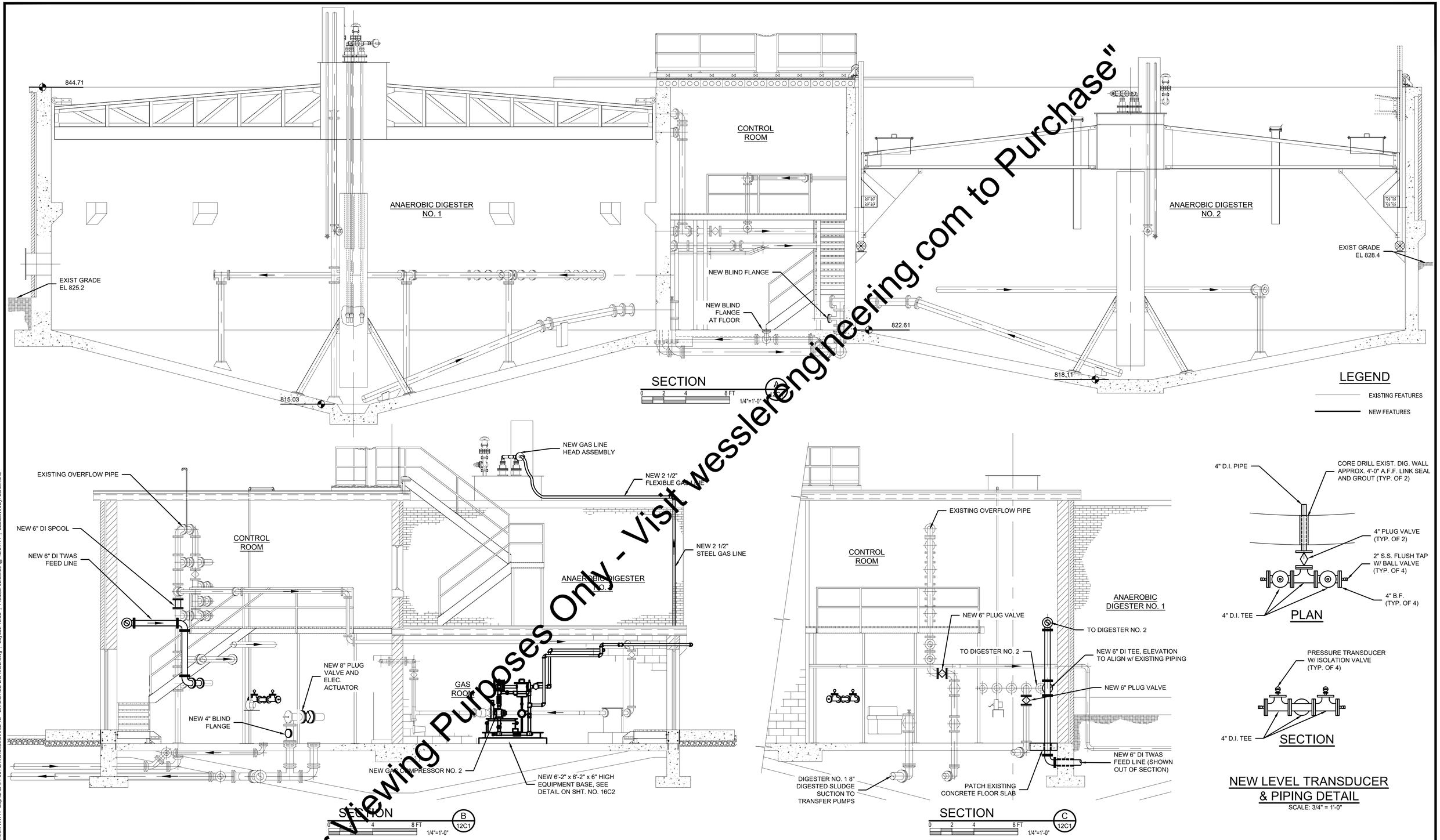

"For Viewing Purposes Only - Visit wesslerengineering.com to Purchase"

SCALE VERIFICATION	DRAWN BY	TWL
BAR IS ONE INCH LONG ON ORIGINAL DRAWING	CHECKED BY	CLR
	APPROVED BY	RWH
	ISSUE DATE	MARCH 2020
	PROJECT NUMBER	193216-04-001

NO.	DATE	INITIALS	REVISION DESCRIPTIONS

ROBERT W. HOLDEN, II REGISTERED No. 10000096 STATE OF INDIANA PROFESSIONAL ENGINEER 03/04/2020

WESSLER ENGINEERING
More than a Project™

WASTEWATER SYSTEM EXPANSION

CITY OF FRANKFORT, INDIANA
CONTRACT A - WASTEWATER TREATMENT PLANT

EXISITNG ANAEROBIC DIGESTERS - MODIFICATIONS SECTIONS

SHEET NO. **12C3**

PAGE NO. 135

Drawing: J:\Frankfort\Projects\193216 Frankfort WWTP Exp\CAD 04-001\DWG\Sheets\Area 12 - EX-DG\12D DG-MOD.dwg | Layout: 12C3 | Plotted: 02/28/20 @ 12:51:44 | LastSavedBy: JonathanL

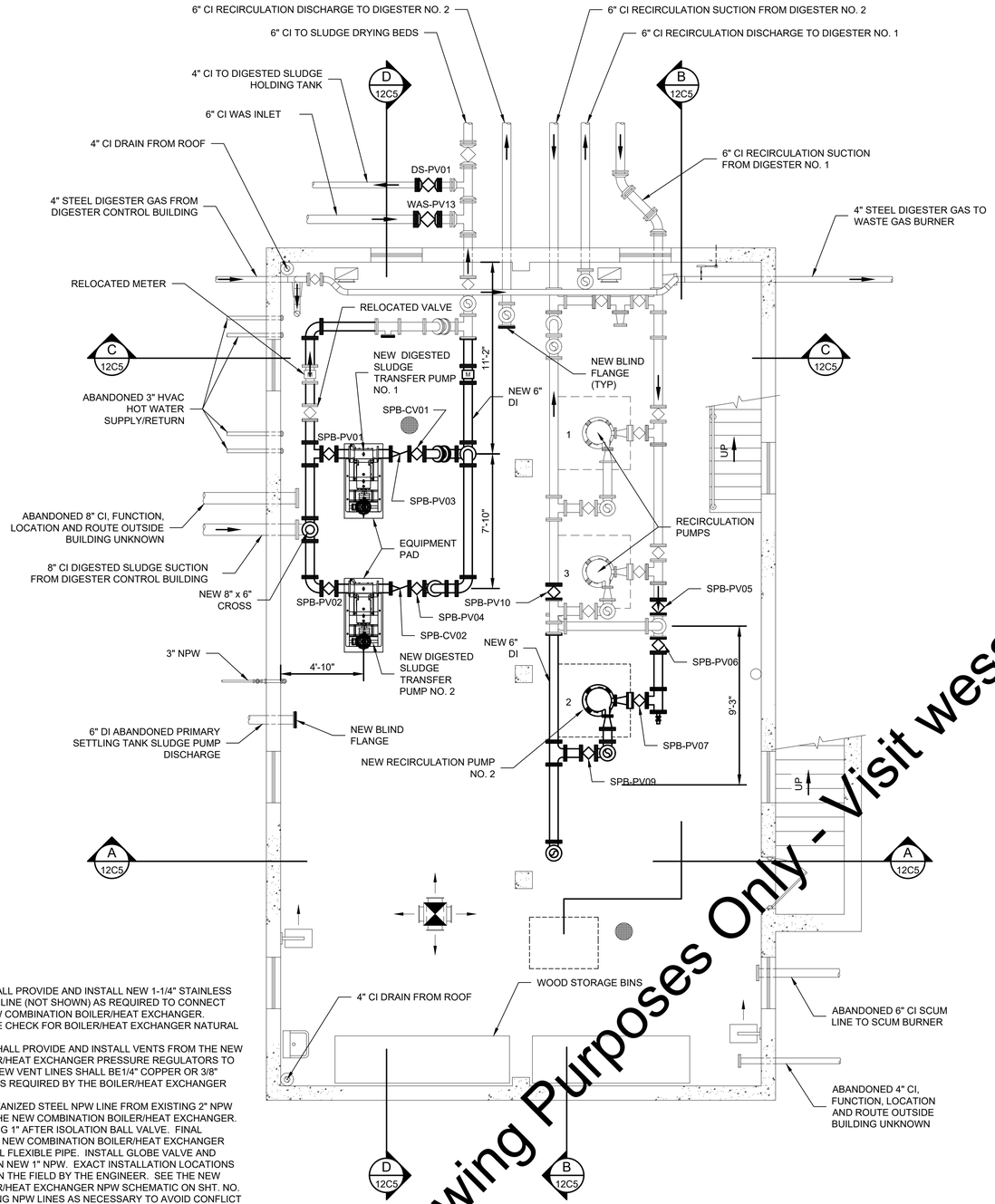

EXISTING SLUDGE PROCESS BUILDING
LOWER LEVEL MODIFICATION PLAN
SCALE: 1/4" = 1'-0"

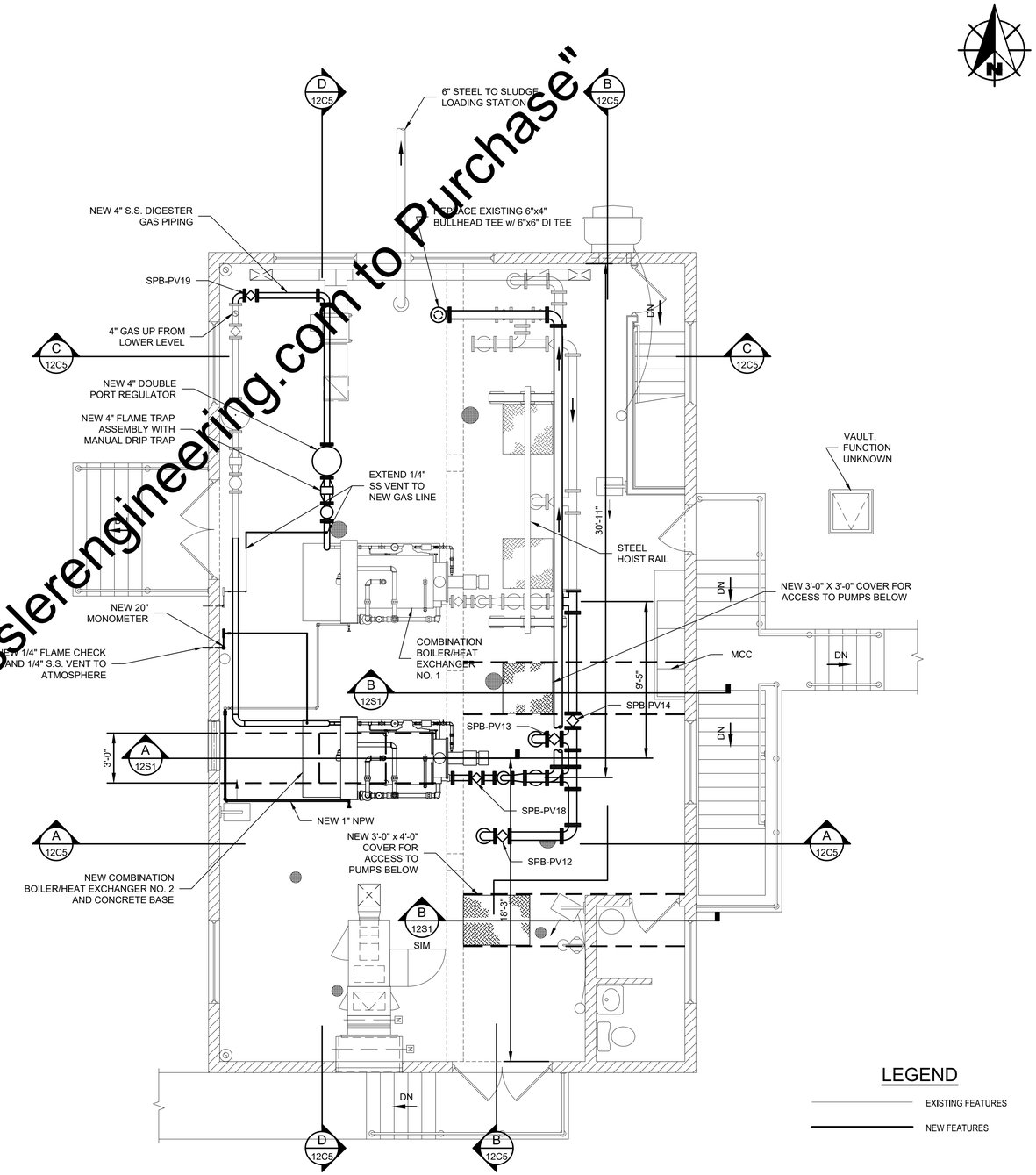

EXISTING SLUDGE PROCESS BUILDING
UPPER LEVEL MODIFICATION PLAN
SCALE: 1/4" = 1'-0"

GENERAL NOTES:

1. THE CONTACTOR SHALL PROVIDE AND INSTALL NEW 1-1/4" STAINLESS STEEL NATURAL GAS LINE (NOT SHOWN) AS REQUIRED TO CONNECT SERVICE TO THE NEW COMBINATION BOILER/HEAT EXCHANGER. PROVIDE 1-1/4" FLAME CHECK FOR BOILER/HEAT EXCHANGER NATURAL GAS LINE.
2. THE CONTRACTOR SHALL PROVIDE AND INSTALL VENTS FROM THE NEW COMBINATION BOILER/HEAT EXCHANGER PRESSURE REGULATORS TO THE OUTSIDE. THE NEW VENT LINES SHALL BE1/4" COPPER OR 3/8" GALVANIZED STEEL AS REQUIRED BY THE BOILER/HEAT EXCHANGER MANUFACTURER.
3. INSTALL NEW 1" GALVANIZED STEEL NPW LINE FROM EXISTING 2" NPW RISER SECTION TO THE NEW COMBINATION BOILER/HEAT EXCHANGER. CONNECT TO EXISTING 1" AFTER ISOLATION BALL VALVE. FINAL CONNECTION TO THE NEW COMBINATION BOILER/HEAT EXCHANGER SHALL BE WITH METAL FLEXIBLE PIPE. INSTALL GLOBE VALVE AND PRESSURE GAUGE ON NEW 1" NPW. EXACT INSTALLATION LOCATIONS TO BE DETERMINED IN THE FIELD BY THE ENGINEER. SEE THE NEW COMBINATION BOILER/HEAT EXCHANGER NPW SCHEMATIC ON SHT. NO. 12C6. ADJUST EXISTING NPW LINES AS NECESSARY TO AVOID CONFLICT WITH NEW 4" SS GAS LINE.
4. THE CONTRACTOR SHALL PROVIDE AND INSTALL 1" GALVANIZED STEEL NPW LINES (NOT SHOWN) TO EACH DIGESTED SLUDGE TRANSFER PUMP AS REQUIRED FOR SEAL WATER.

LEGEND

EXISTING FEATURES
NEW FEATURES

SCALE VERIFICATION	DRAWN BY	TWL
BAR IS ONE INCH LONG ON ORIGINAL DRAWING	CHECKED BY	DRI
	APPROVED BY	RWH
	ISSUE DATE	MARCH 2020
	PROJECT NUMBER	193216-04-001

NO.	DATE	INITIALS	REVISION DESCRIPTIONS

ROBERT W. HOLDEN, II REGISTERED No. 10000096 STATE OF INDIANA PROFESSIONAL ENGINEER 03/04/2020

WESSLER ENGINEERING
More than a Project™

WASTEWATER SYSTEM EXPANSION
CITY OF FRANKFORT, INDIANA
CONTRACT A - WASTEWATER TREATMENT PLANT

EXISTING SLUDGE PROCESS BUILDING MODIFICATIONS PLANS

SHEET NO. **12C4**

PAGE NO. 136

"For Viewing Purposes Only - Visit wesslerengineering.com to Purchase"

Drawing: J:\Frankfort\Projects\193216 Frankfort WWTP Exp\CAD 04-001\DWG\Sheets\Area 12 - EX-DG\12C DG-SL-BLDG-MOD.dwg | Layout: 12C4 | Plotted: 02/28/20 @ 09:28:42 | LastSavedBy: JasonW

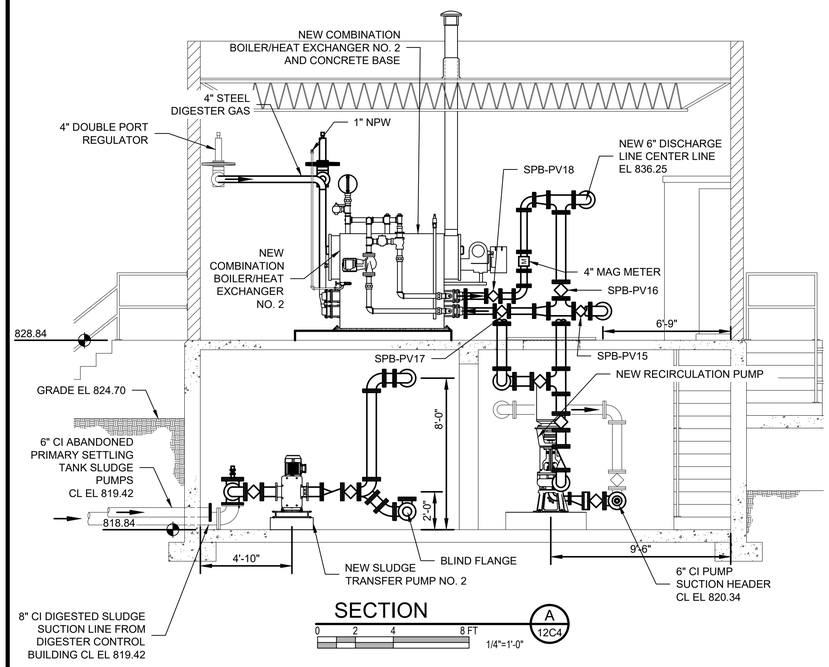

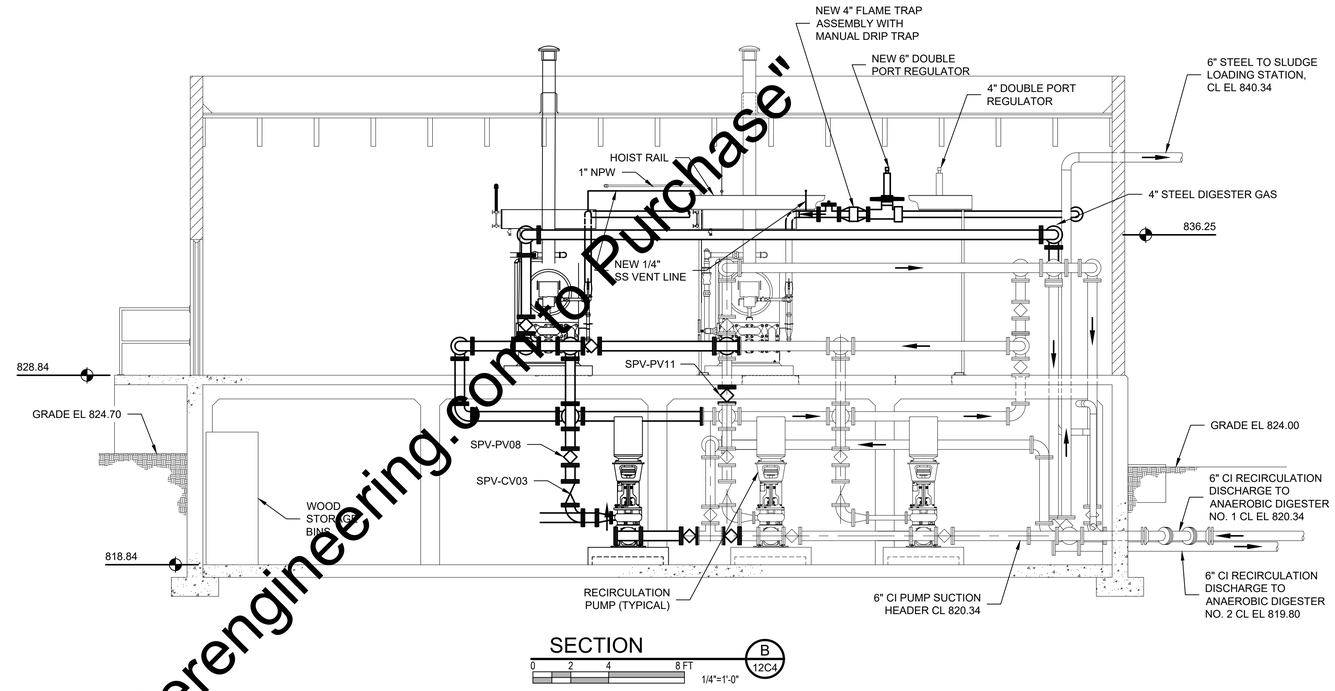

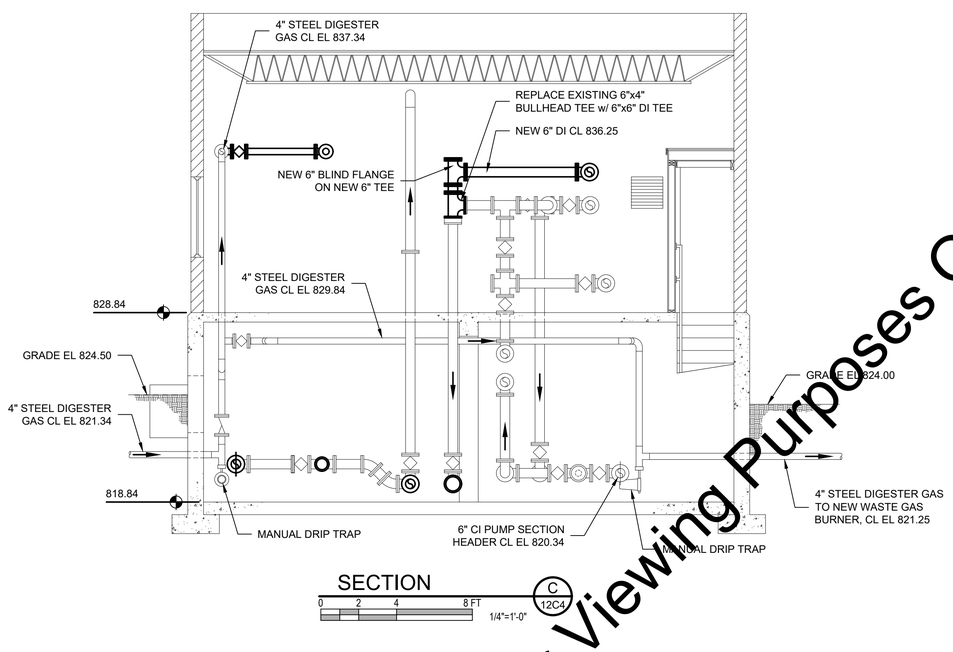

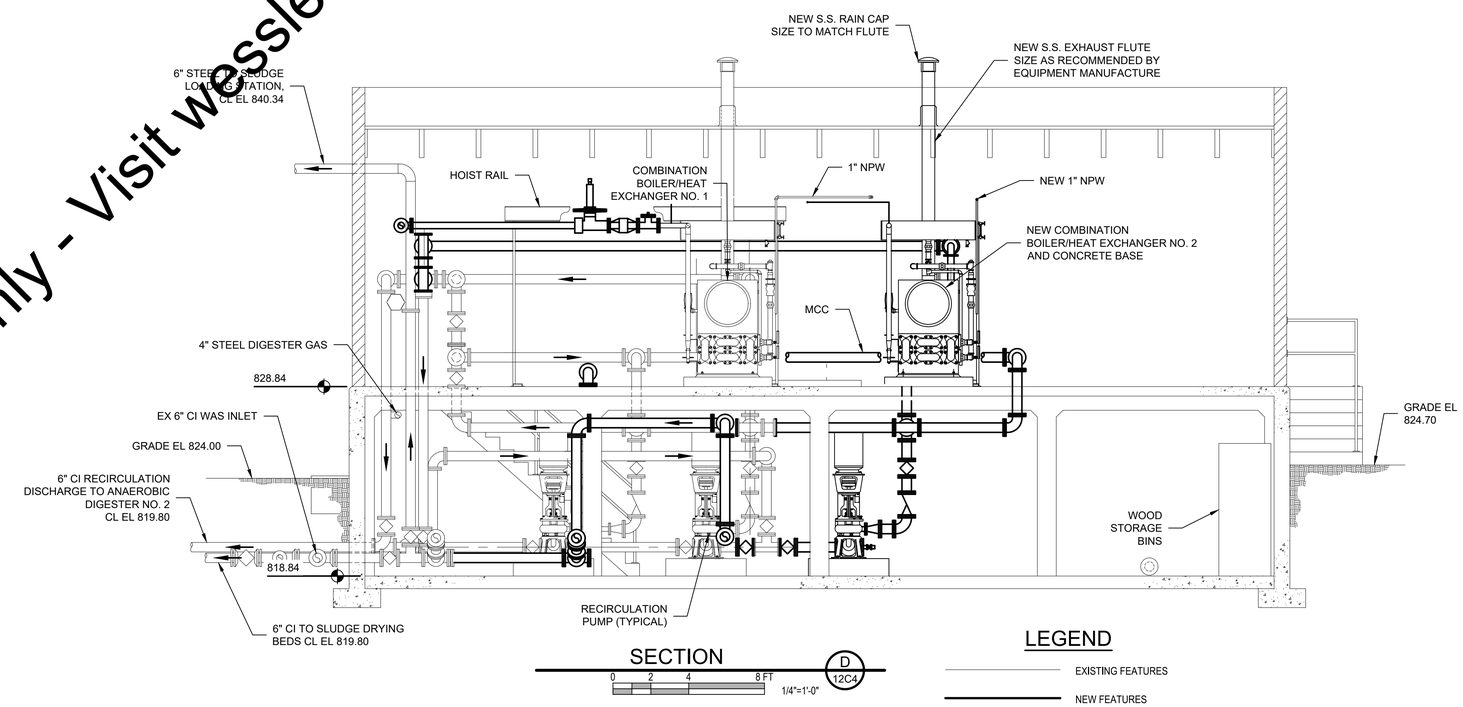

LEGEND

EXISTING FEATURES

NEW FEATURES

"For Viewing Purposes Only - Visit wesslerengineering.com to Purchase"

SCALE VERIFICATION	DRAWN BY	TWL
BAR IS ONE INCH LONG ON ORIGINAL DRAWING	CHECKED BY	DRI
	APPROVED BY	RWH
	ISSUE DATE	MARCH 2020
	PROJECT NUMBER	193216-04-001

NO.	DATE	INITIALS	REVISION DESCRIPTIONS

ROBERT W. HOLDEN II REGISTERED No. 10000096 STATE OF INDIANA PROFESSIONAL ENGINEER 03/04/2020

WESSLER ENGINEERING
More than a Project™

WASTEWATER SYSTEM EXPANSION

CITY OF FRANKFORT, INDIANA

CONTRACT A - WASTEWATER TREATMENT PLANT

EXISTING SLUDGE PROCESS BUILDING MODIFICATIONS SECTIONS

SHEET NO. **12C5**

PAGE NO. 137

Drawing: J:\Frankfort\Projects\193216 Frankfort WWTP Exp\CAD 04-001\DWG\Sheets\Area 12 - EX-DG\12C DG-SL-BLDG-MOD.dwg | Layout: 12C5 | Plottest: 02/28/20 @ 09:29:00 | LastSavedBy: JasonW

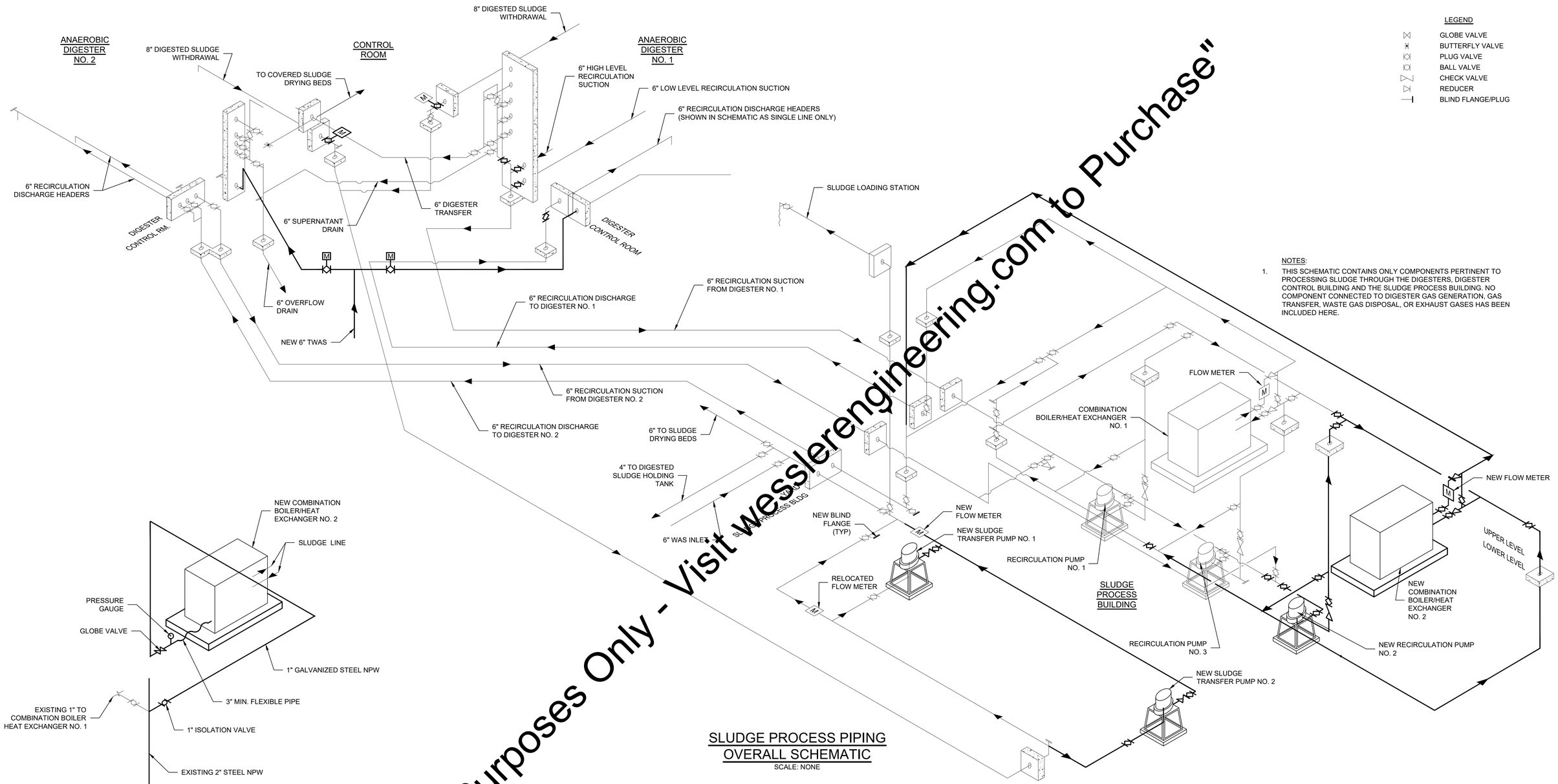

NOTES:

1. THIS SCHEMATIC CONTAINS ONLY COMPONENTS PERTINENT TO PROCESSING SLUDGE THROUGH THE DIGESTERS, DIGESTER CONTROL BUILDING AND THE SLUDGE PROCESS BUILDING. NO COMPONENT CONNECTED TO DIGESTER GAS GENERATION, GAS TRANSFER, WASTE GAS DISPOSAL, OR EXHAUST GASES HAS BEEN INCLUDED HERE.

SLUDGE PROCESS PIPING OVERALL SCHEMATIC

SCALE: NONE

NEW COMBINATION BOILER/HEAT EXCHANGER NPW SCHEMATIC

SCALE: NONE

"For Viewing Purposes Only - Visit wesslerengineering.com to Purchase"

SCALE VERIFICATION	DRAWN BY	DLT
BAR IS ONE INCH LONG ON ORIGINAL DRAWING	CHECKED BY	DRT
	APPROVED BY	RWH
	ISSUE DATE	MARCH 2020
	PROJECT NUMBER	193216-04-001

NO.	DATE	INITIALS	REVISION DESCRIPTIONS

ROBERT W. HOLDEN, II REGISTERED No. 10000096 STATE OF INDIANA PROFESSIONAL ENGINEER 03/04/2020

WESSLER ENGINEERING
More than a Project™

WASTEWATER SYSTEM EXPANSION

CITY OF FRANKFORT, INDIANA
CONTRACT A - WASTEWATER TREATMENT PLANT

SLUDGE PROCESS PIPING AND NPW SCHEMATIC

SHEET NO. **12C6**

PAGE NO. 138

Drawing: J:\Frankfort\Projects\193216 Frankfort WWTP Exp\CAD 04-001\DWG\Sheets\Area 12 - EX-DG\12C DG-SL-BLDG-MOD.dwg | Layout: SLUDGE PROCESS PIPING AND NPW SCHEMATIC | Plotted: 02/28/20 @ 09:29:01 | LastSavedBy: JasonW

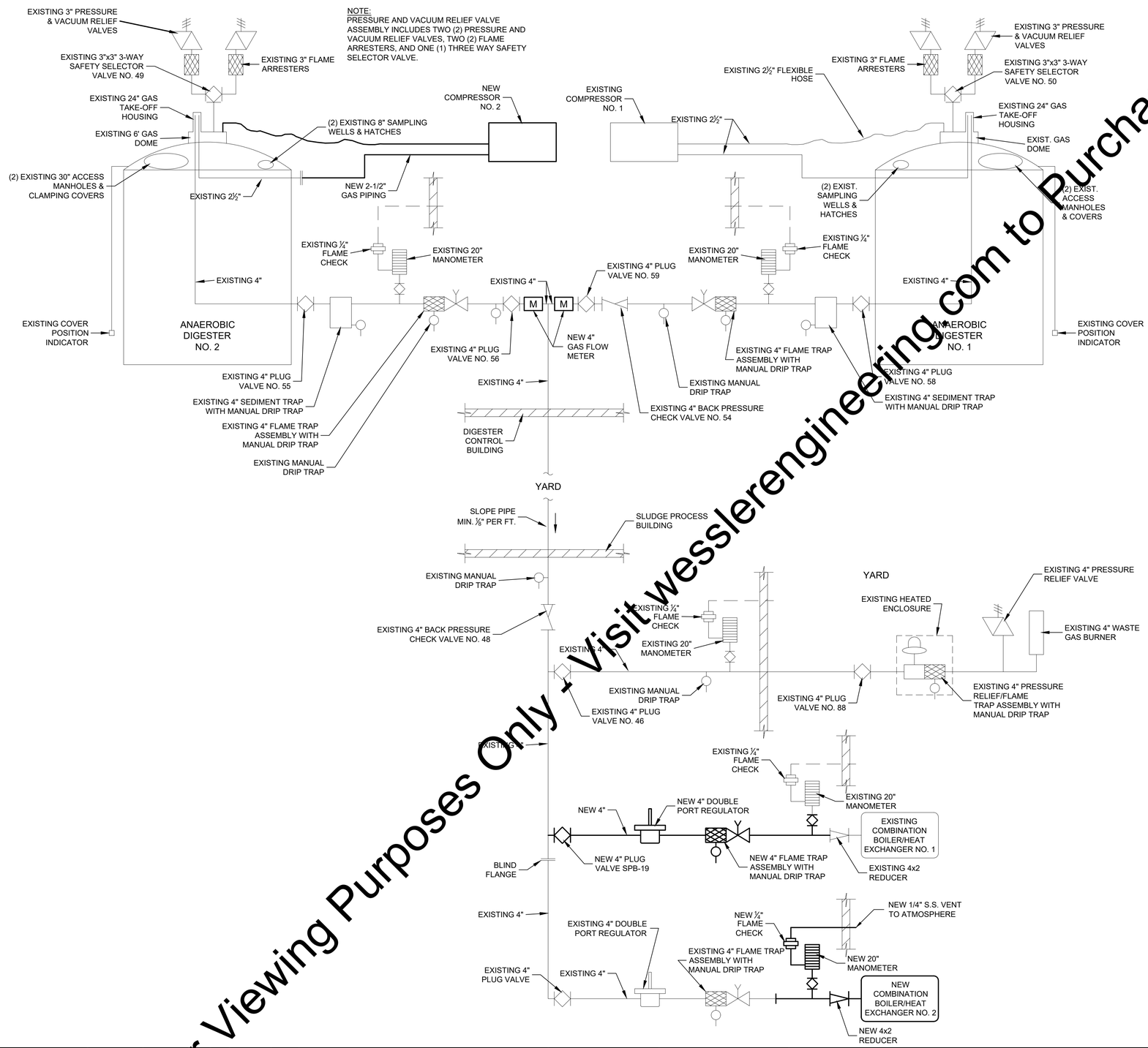

"For Viewing Purposes Only - Visit wesslerengineering.com to Purchase"

SCALE VERIFICATION	DRAWN BY	DLT
BAR IS ONE INCH LONG ON ORIGINAL DRAWING	CHECKED BY	DRI
	APPROVED BY	RWH
	ISSUE DATE	MARCH 2020
	PROJECT NUMBER	193216-04-001

NO.	DATE	INITIALS	REVISION DESCRIPTIONS

ROBERT W. HOLDEN, II REGISTERED No. 10000096 STATE OF INDIANA PROFESSIONAL ENGINEER 03/04/2020

WESSLER ENGINEERING
More than a Project™

WASTEWATER SYSTEM EXPANSION

CITY OF FRANKFORT, INDIANA
CONTRACT A - WASTEWATER TREATMENT PLANT

GAS PIPING SCHEMATIC

SHEET NO. **12C7**

PAGE NO. 139

Drawing: J:\Frankfort\Projects\193216 Frankfort WWTP Exp\CAD 04-001\DWG\Sheets\Area 12 - EX-DG\12C DG-SL-BLDG-MOD.dwg | Layout: 12C7 GAS PIPING SCHEMATIC | Plotted: 02/28/20 @ 09:29:02 | LastSavedBy: JasonW

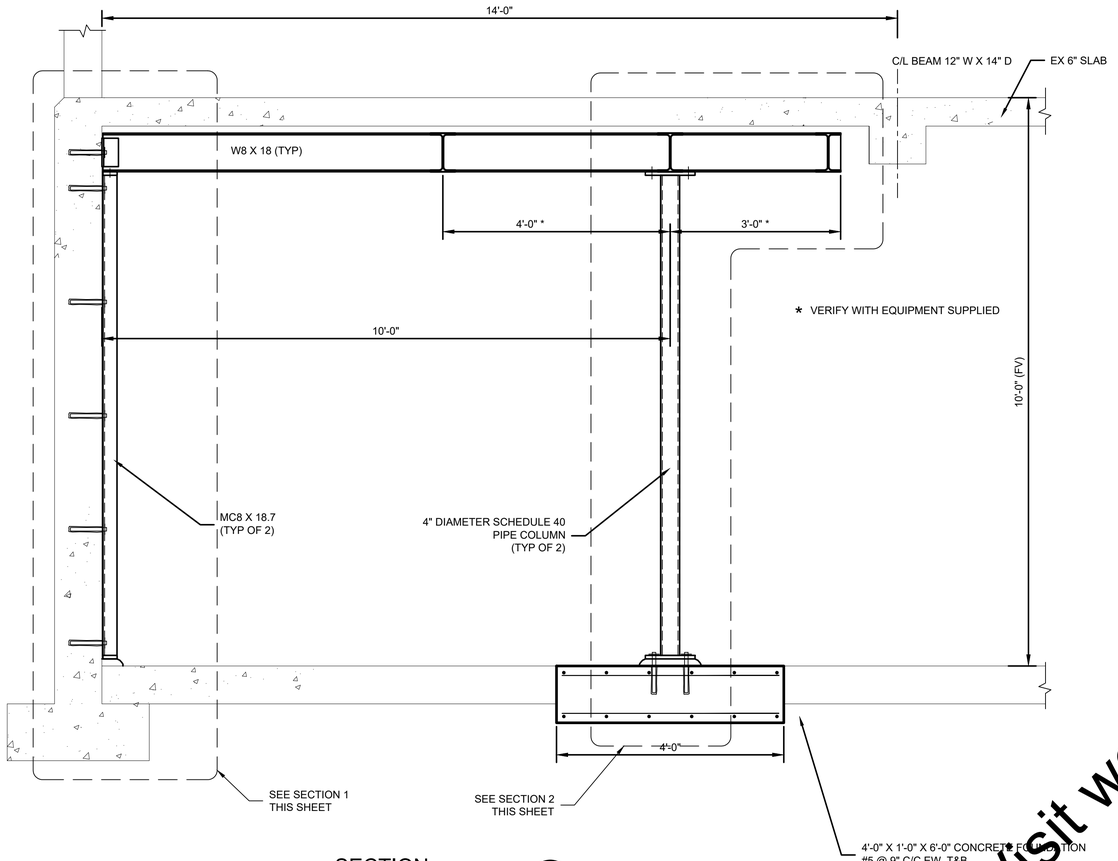

SECTION A 12S1
SCALE: 1-1/2" = 1'-0"

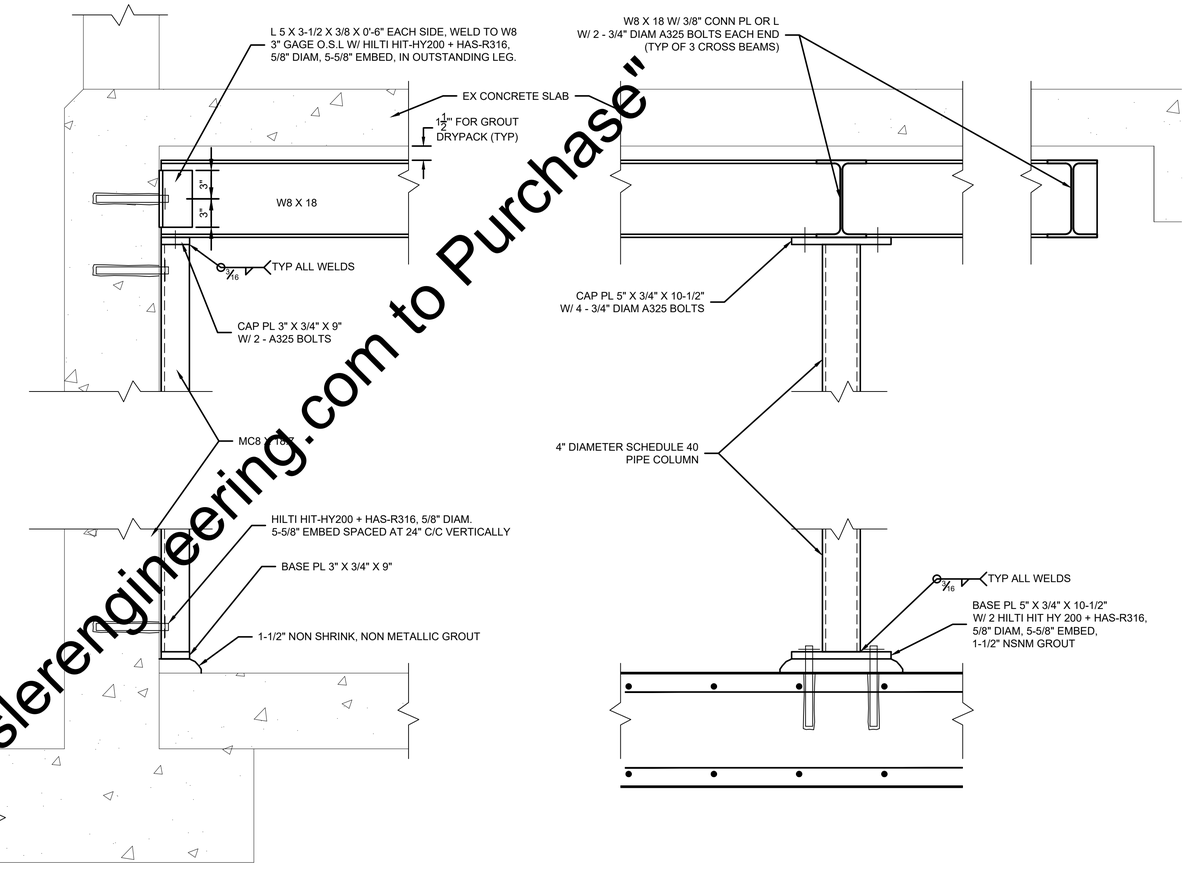

SECTION 1 12S1
SCALE: 1-1/2" = 1'-0"

SECTION 2 12S1
SCALE: 1-1/2" = 1'-0"

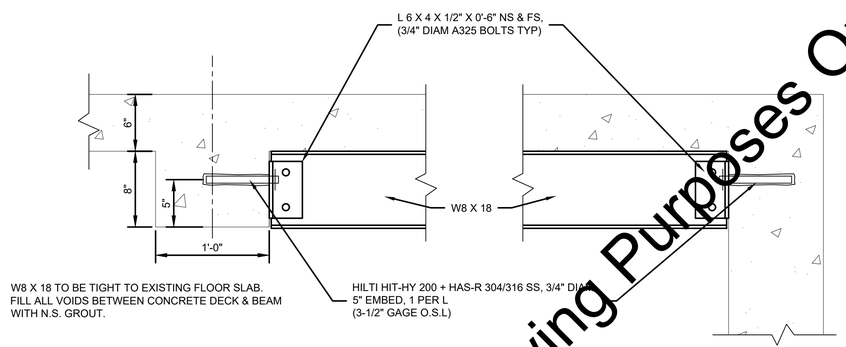

SECTION B 12S1
SCALE: 1-1/2" = 1'-0"

FOR STRUCTURAL GENERAL NOTES SEE SHEET 1G10
FOR STANDARD DETAILS SEE AREA 16S SHEETS

"For Viewing Purposes Only - Visit wesslerengineering.com to Purchase"

SCALE VERIFICATION	DRAWN BY	TWL
BAR IS ONE INCH LONG ON ORIGINAL DRAWING	CHECKED BY	JRB
	APPROVED BY	JRB
	ISSUE DATE	MARCH 2020
	PROJECT NUMBER	193216-04-001

NO.	DATE	INITIALS	REVISION DESCRIPTIONS

JEFFREY ROSS BALLARD REGISTERED No. 60860191 STATE OF INDIANA PROFESSIONAL ENGINEER 03/04/2020

WESSLER ENGINEERING
More than a Project™

WASTEWATER SYSTEM EXPANSION
CITY OF FRANKFORT, INDIANA
CONTRACT A - WASTEWATER TREATMENT PLANT

SLUDGE PROCESS BUILDING - STRUCTURAL

SHEET NO. **12S1**

PAGE NO. 140

Drawing: J:\Frankfort\Projects\193216 Frankfort WWTP Exp\CAD 04-001\DWG\Sheets\Area 12 - EX-DG\12S DG-SL-BLDG-STR.dwg | Layout: 01 | Plotted: 02/28/20 @ 12:53:42 | LastSavedBy: JasonW

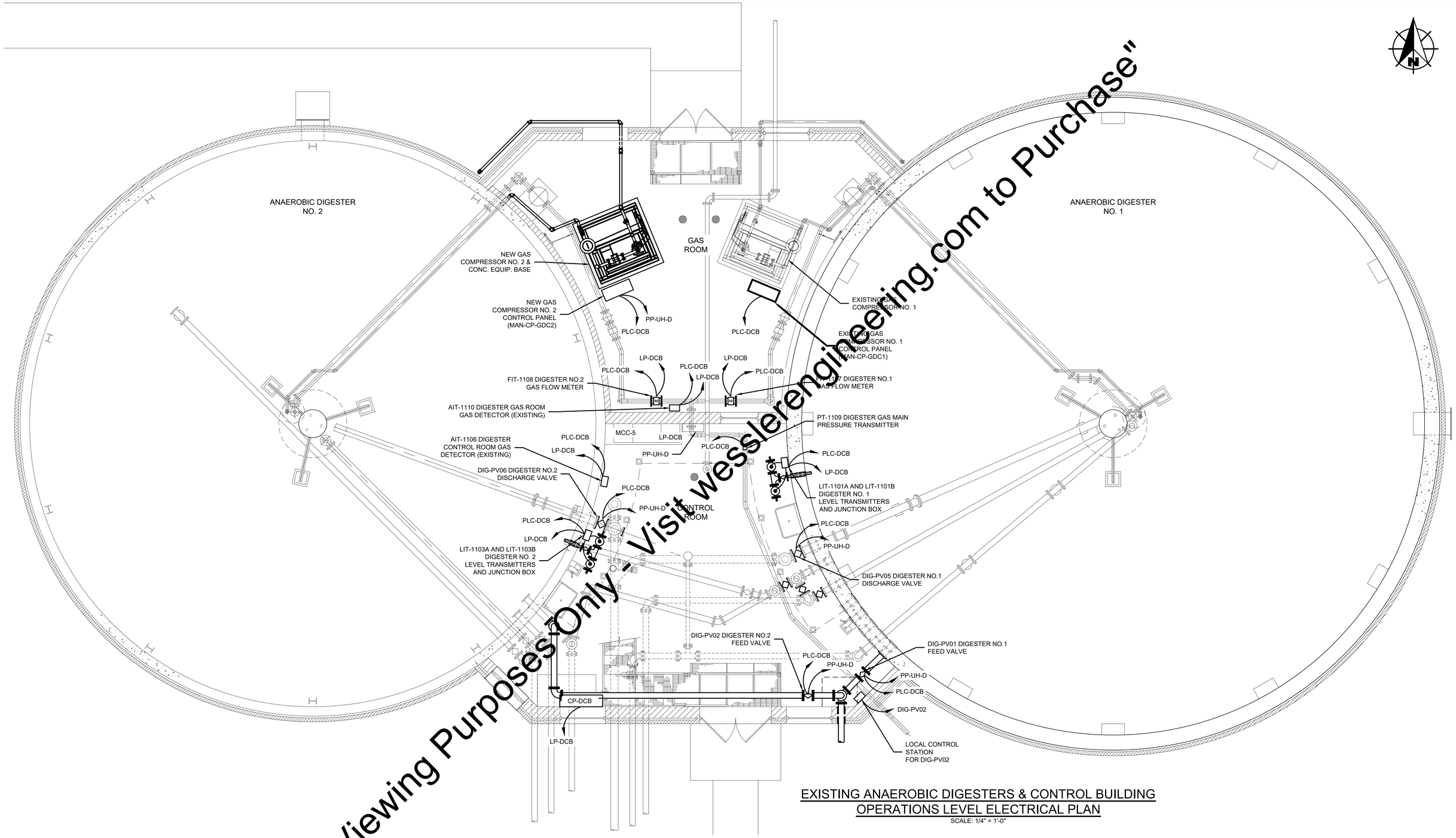

EXISTING ANAEROBIC DIGESTERS & CONTROL BUILDING
OPERATIONS LEVEL ELECTRICAL PLAN
SCALE: 1/4" = 1'-0"

"For Viewing Purposes Only - Visit wesslerengineering.com to Purchase"

SCALE VERIFICATION	DRAWN BY	EAS
BAR IS ONE INCH LONG ON ORIGINAL DRAWING	CHECKED BY	WCM
	APPROVED BY	WCM
	ISSUE DATE	MARCH 2020
	PROJECT NUMBER	193216-04-001

NO.	DATE	INITIALS	REVISION DESCRIPTIONS

WAYNE C. MOORE REGISTERED No. 10707476 STATE OF INDIANA PROFESSIONAL ENGINEER 03/04/2020

WESSLER ENGINEERING
More than a Project™

WASTEWATER SYSTEM EXPANSION
CITY OF FRANKFORT, INDIANA
CONTRACT A - WASTEWATER TREATMENT PLANT

EXISTING ANAEROBIC DIGESTERS MODIFICATIONS ELECTRICAL PLAN

SHEET NO. **12E1**

PAGE NO. 141

Drawing: J:\Frankfort\Projects\193216 Frankfort WWTP Exp\CAD 04-001\DWG\Sheets\Area 12 - EX-DG\12E DG-EL.dwg | Layout: 12E1 | Plotted: 03/05/20 @ 08:42:07 | LastSavedBy: MikeN

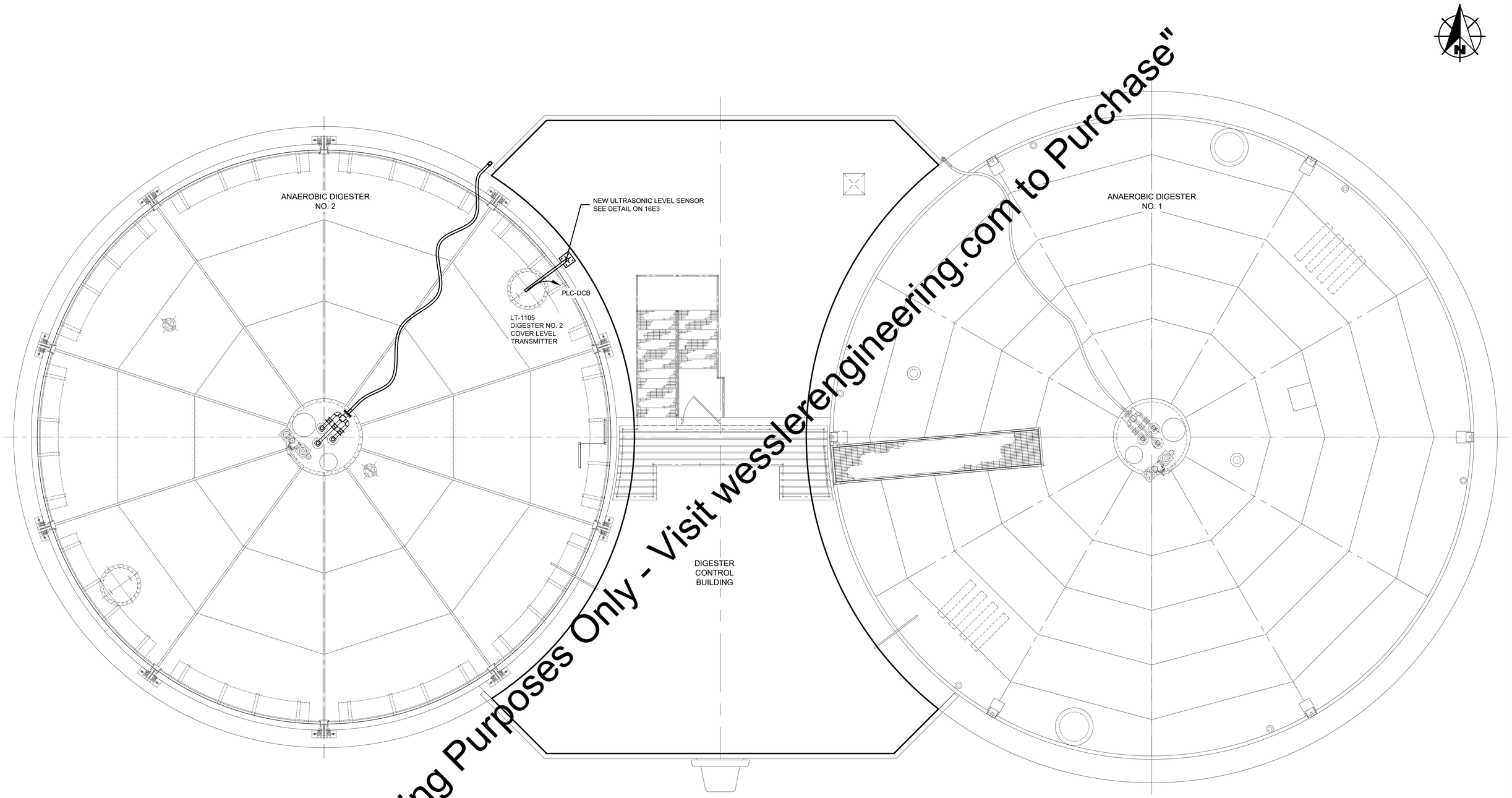

"For Viewing Purposes Only - Visit wesslerengineering.com to Purchase"

EXISTING ANAEROBIC DIGESTERS & CONTROL BUILDING
TOP LEVEL ELECTRICAL PLAN

SCALE: 1/4" = 1'-0"

0 2 4 8 FT
1/4"=1'-0"

SCALE VERIFICATION	DRAWN BY	EAS
BAR IS ONE INCH LONG ON ORIGINAL DRAWING	CHECKED BY	WCM
	APPROVED BY	WCM
	ISSUE DATE	MARCH 2020
	PROJECT NUMBER	193216-04-001

NO.	DATE	INITIALS	REVISION DESCRIPTIONS

WAYNE C. MOORE REGISTERED No. 10707476 STATE OF INDIANA PROFESSIONAL ENGINEER 03/04/2020

WESSLER ENGINEERING
More than a Project™

WASTEWATER SYSTEM EXPANSION

CITY OF FRANKFORT, INDIANA
CONTRACT A - WASTEWATER TREATMENT PLANT

EXISTING ANAEROBIC DIGESTERS MODIFICATIONS
POWER PLAN

SHEET NO.
12E2

PAGE NO.
142

Drawing: J:\Frankfort\Projects\193216 Frankfort WWTP Exp\CAD 04-001\DWG\Sheets\Area 12 - EX-DG\12E DG-EL.dwg | Layout: 12E2 | Plotted: 03/04/20 @ 05:06:39 | LastSavedBy: RyanM

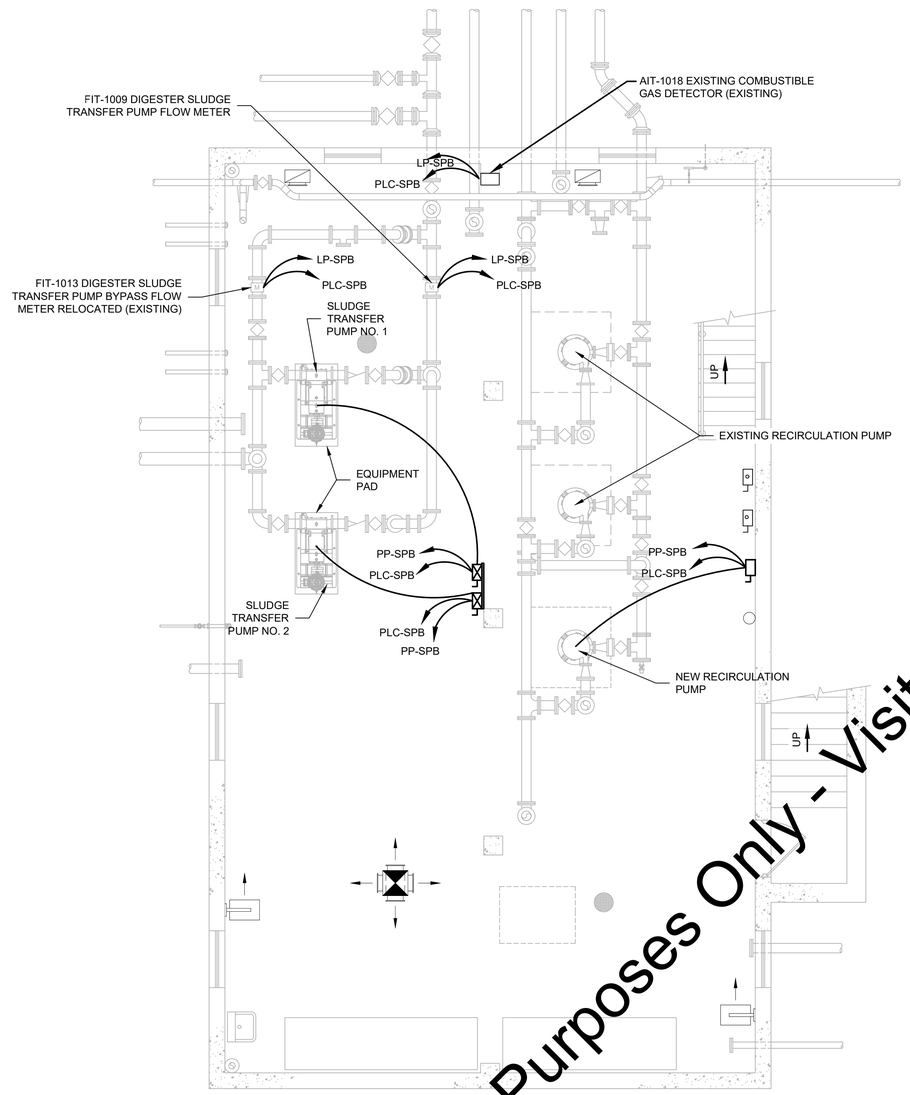

EXISTING SLUDGE PROCESS BUILDING
LOWER LEVEL ELECTRICAL PLAN
SCALE: 1/4" = 1'-0"

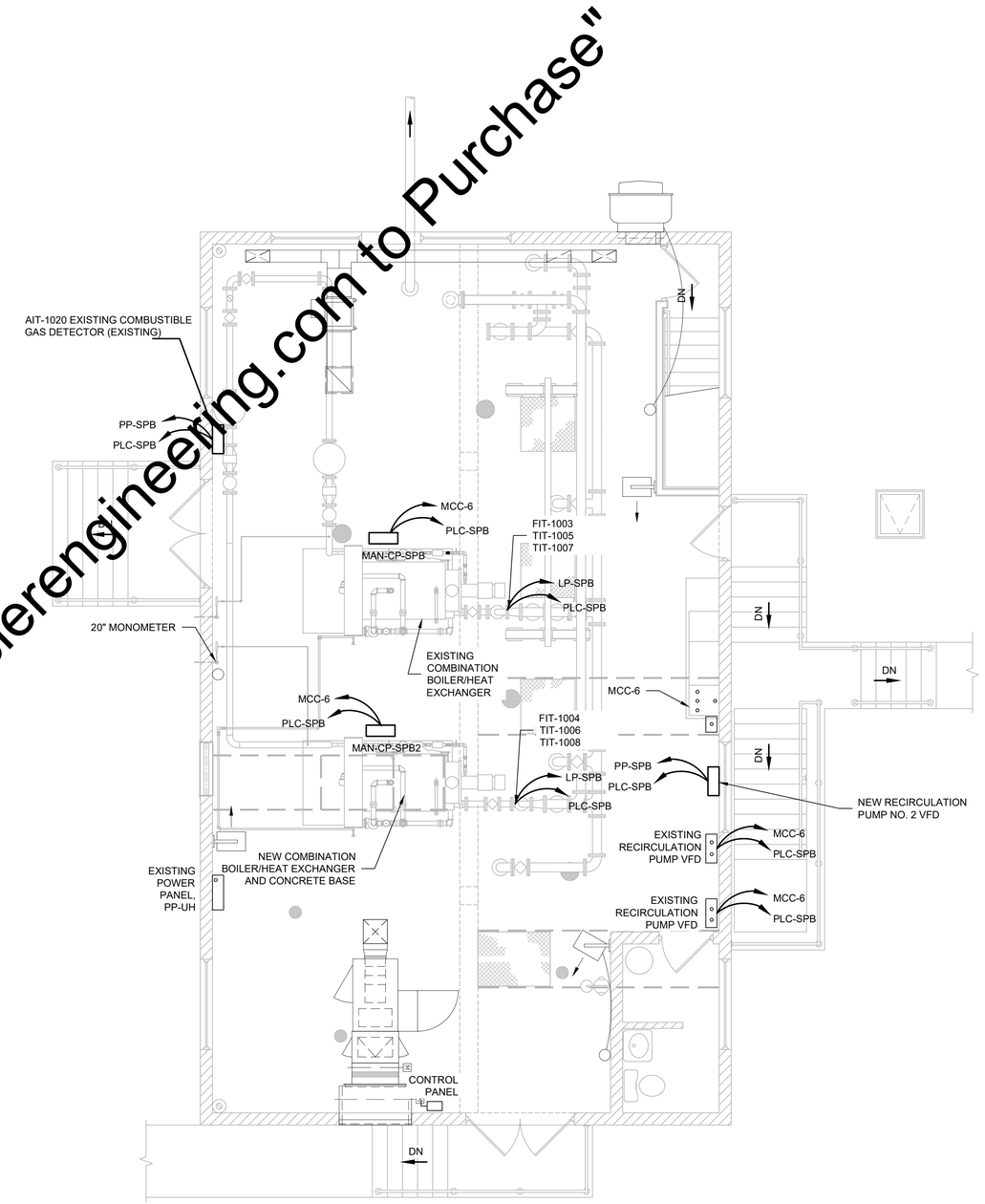

EXISTING SLUDGE PROCESS BUILDING
UPPER LEVEL ELECTRICAL PLAN
SCALE: 1/4" = 1'-0"

"For Viewing Purposes Only - Visit wesslerengineering.com to Purchase"

SCALE VERIFICATION	DRAWN BY	EAS	NO.	DATE	INITIALS	REVISION DESCRIPTIONS
BAR IS ONE INCH LONG ON ORIGINAL DRAWING	CHECKED BY	WCM				
	APPROVED BY	WCM				
	ISSUE DATE	MARCH 2020				
	PROJECT NUMBER	193216-04-001				

WAYNE C. MOORE REGISTERED No. 10707476 STATE OF INDIANA PROFESSIONAL ENGINEER 03/04/2020

WESSLER ENGINEERING
More than a Project™

WASTEWATER SYSTEM EXPANSION
CITY OF FRANKFORT, INDIANA
CONTRACT A - WASTEWATER TREATMENT PLANT

EXISTING SLUDGE PROCESS BUILDING POWER PLANS

SHEET NO. **12E3**

Drawing: J:\Frankfort\Projects\193216 Frankfort WWTP Exp\CAD 04-001\DWG\Sheets\Area 12 - EX-DG\12E EL-DG-SL-BLDG.dwg | Layout: 12E3 | Plotted: 03/05/20 @ 11:02:25 | LastSavedBy: RyanM

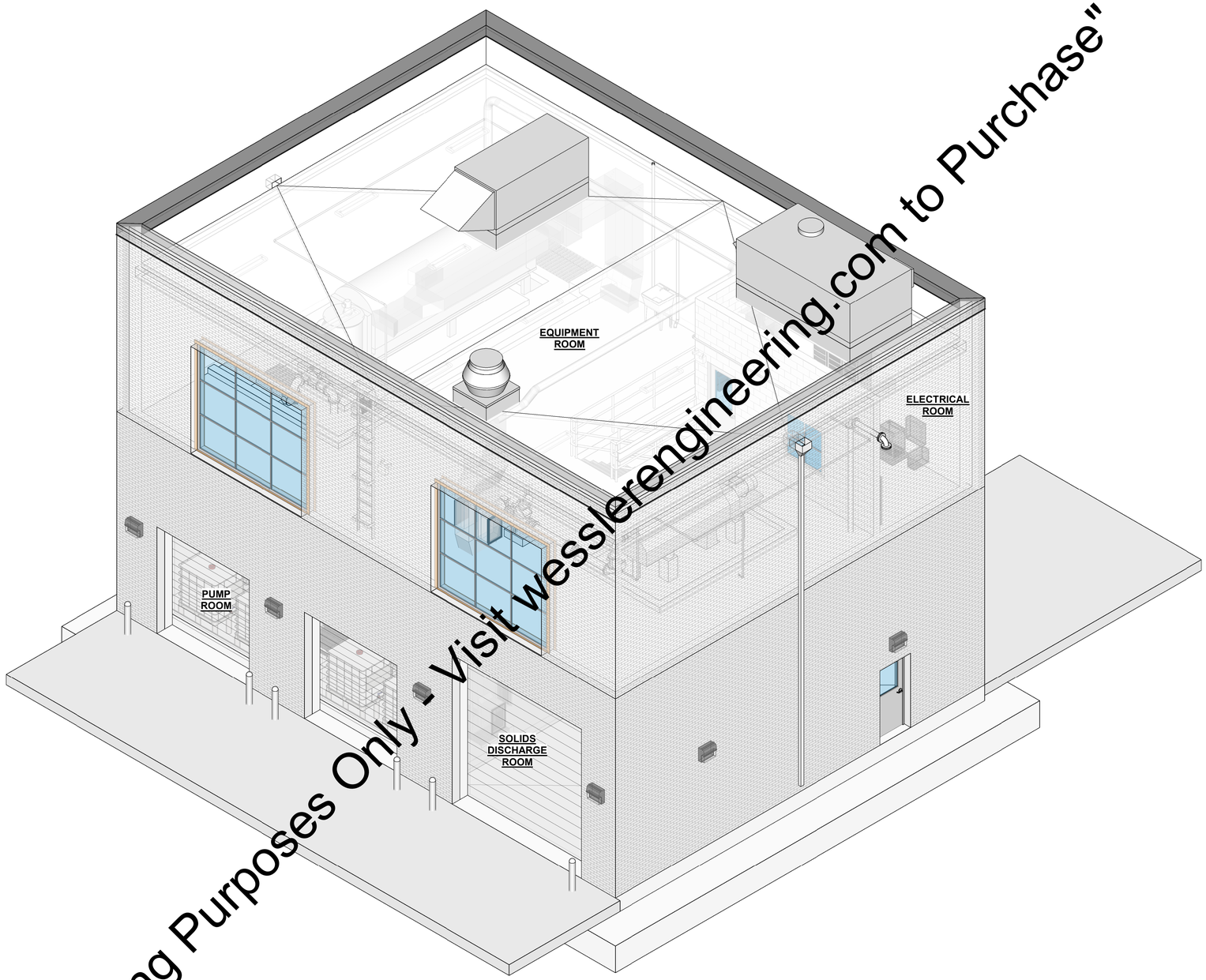

NORTHEAST PERSPECTIVE VIEW

SCALE: NONE

"For Viewing Purposes Only - Visit wesslerengineering.com to Purchase"

SCALE VERIFICATION	DRAWN BY	JWLN
BAR IS ONE INCH LONG ON ORIGINAL DRAWING	CHECKED BY	ALT
	APPROVED BY	RWH
	ISSUE DATE	MARCH 2020
	PROJECT NUMBER	193216-04-001

NO.	DATE	INITIALS	REVISION DESCRIPTION

ROBERT W. HOLDEN II REGISTERED No. 10000096 STATE OF INDIANA PROFESSIONAL ENGINEER 3/4/2020

WESSLER ENGINEERING

More than a Project™

WASTEWATER SYSTEM EXPANSION

CITY OF FRANKFORT, INDIANA

CONTRACT A - WASTEWATER TREATMENT PLANT

NEW THICKENING AND DEWATERING BUILDING PERSPECTIVE VIEWS

SHEET NO. **13G1**

PAGE NO. 144

Plotted: 3/4/2020 3:25:38 PM C:\users\Jonathan\Documents\193216-New Thickening and Dewatering_CENTRAL - R19_JonathanL_WE.rvt

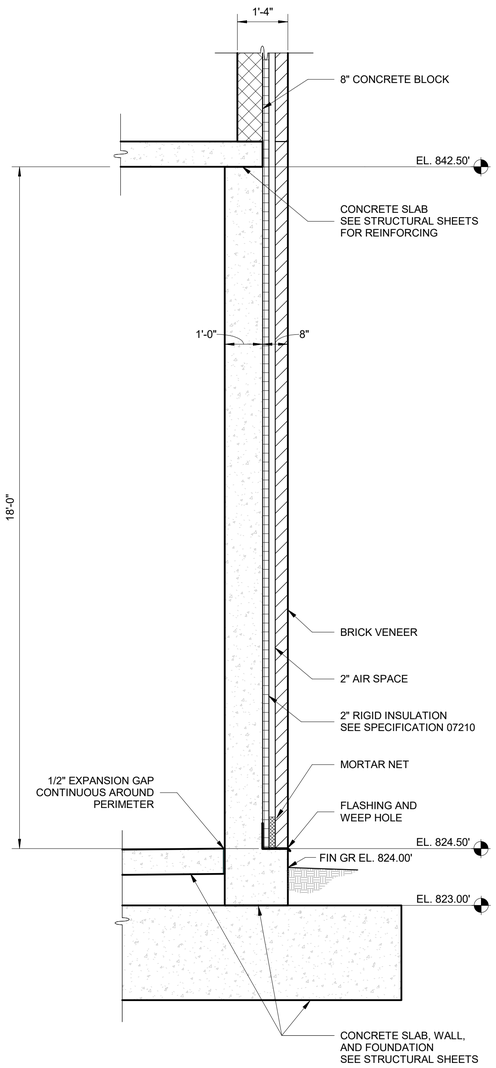

SECTION A 13A1

0 1 2 4 FT 1/2"=1'-0"

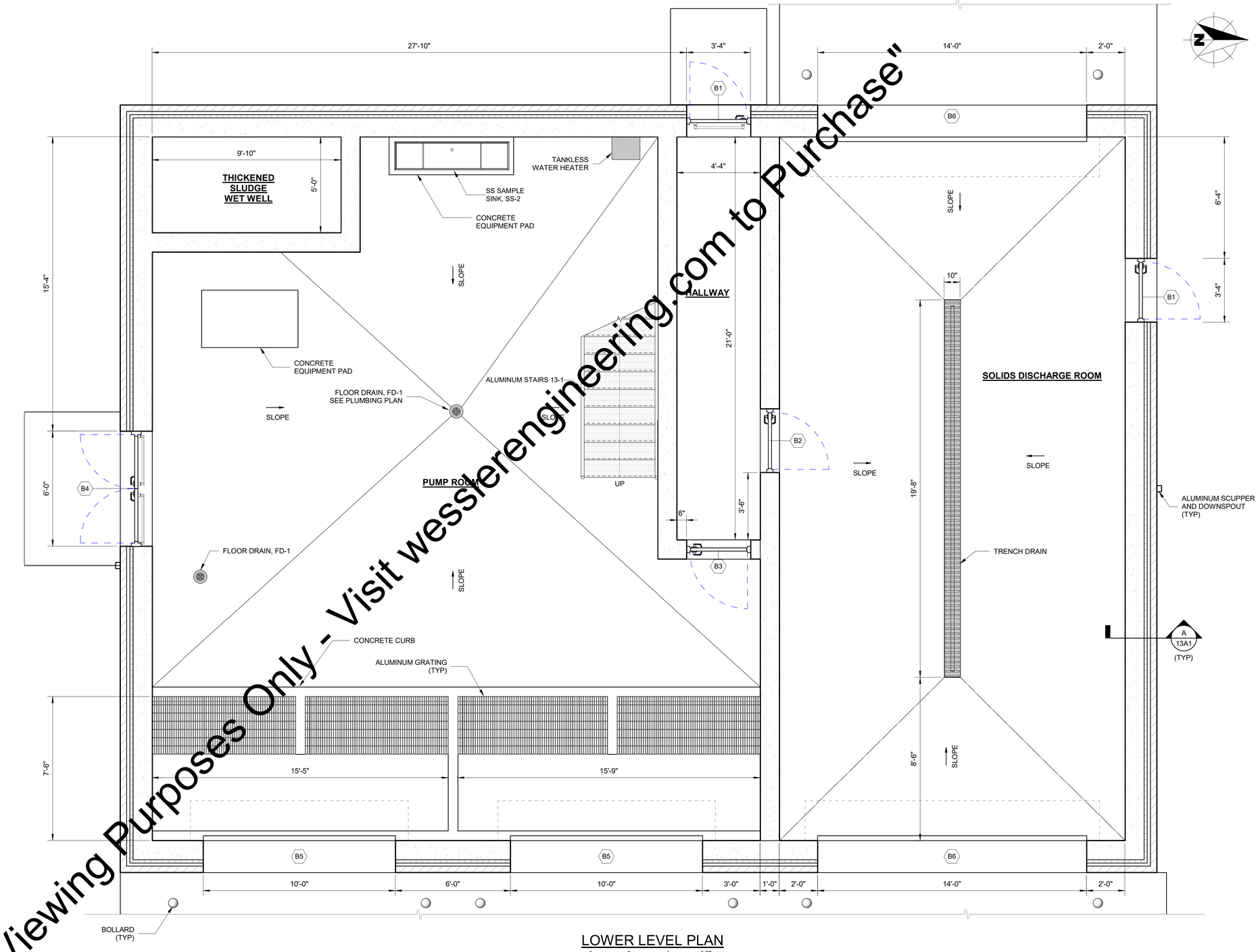

LOWER LEVEL PLAN

0 2 4 6 FT 3/8"=1'-0"

"For Viewing Purposes Only - Visit wesslerengineering.com to Purchase"

SCALE VERIFICATION	DRAWN BY	JWLN
BAR IS ONE INCH LONG ON ORIGINAL DRAWING	CHECKED BY	ALT
	APPROVED BY	RWH
	ISSUE DATE	MARCH 2020
	PROJECT NUMBER	193216-04-001

NO.	DATE	INITIALS	REVISION DESCRIPTION

ROBERT W. HOLDEN, II REGISTERED No. 10000096 STATE OF INDIANA PROFESSIONAL ENGINEER 3/4/2020

WESSLER ENGINEERING

More than a Project™

WASTEWATER SYSTEM EXPANSION

CITY OF FRANKFORT, INDIANA

CONTRACT A - WASTEWATER TREATMENT PLANT

NEW THICKENING AND DEWATERING BUILDING

LOWER LEVEL PLAN

SHEET NO. **13A1**

PAGE NO. 145

Plotted: 2/26/2020 2:08:33 PM C:\users\JonathanL\Documents\193216-New Thickening and Dewatering_CENTRAL - R19_JonathanL_WE.rvt

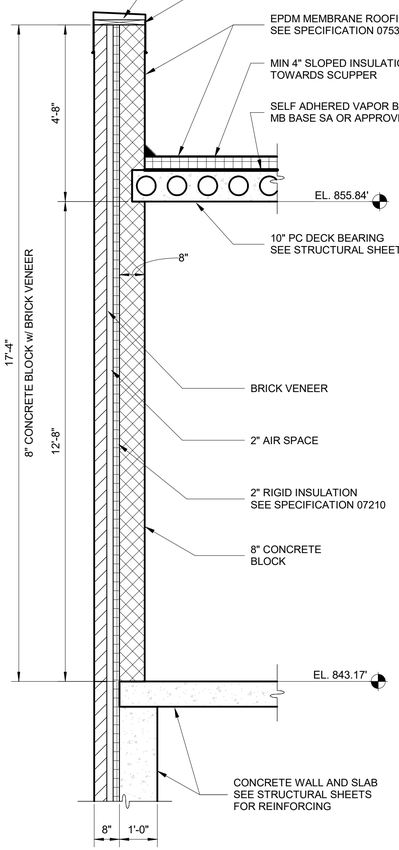

SECTION B 13A2

0 1 2 4 FT 1/2"=1'-0"

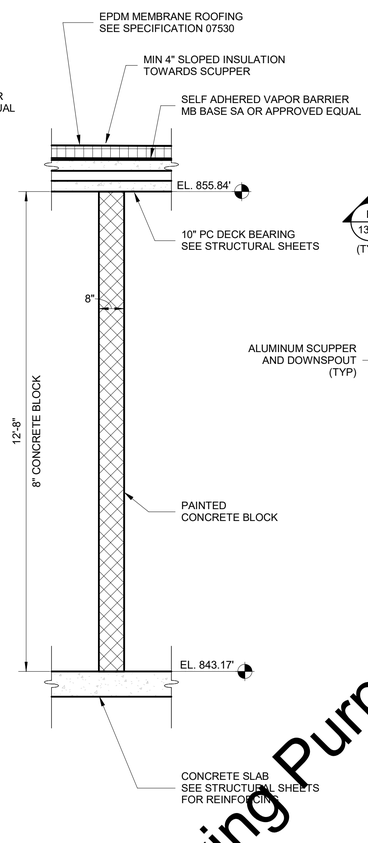

SECTION C 13A2

0 1 2 4 FT 1/2"=1'-0"

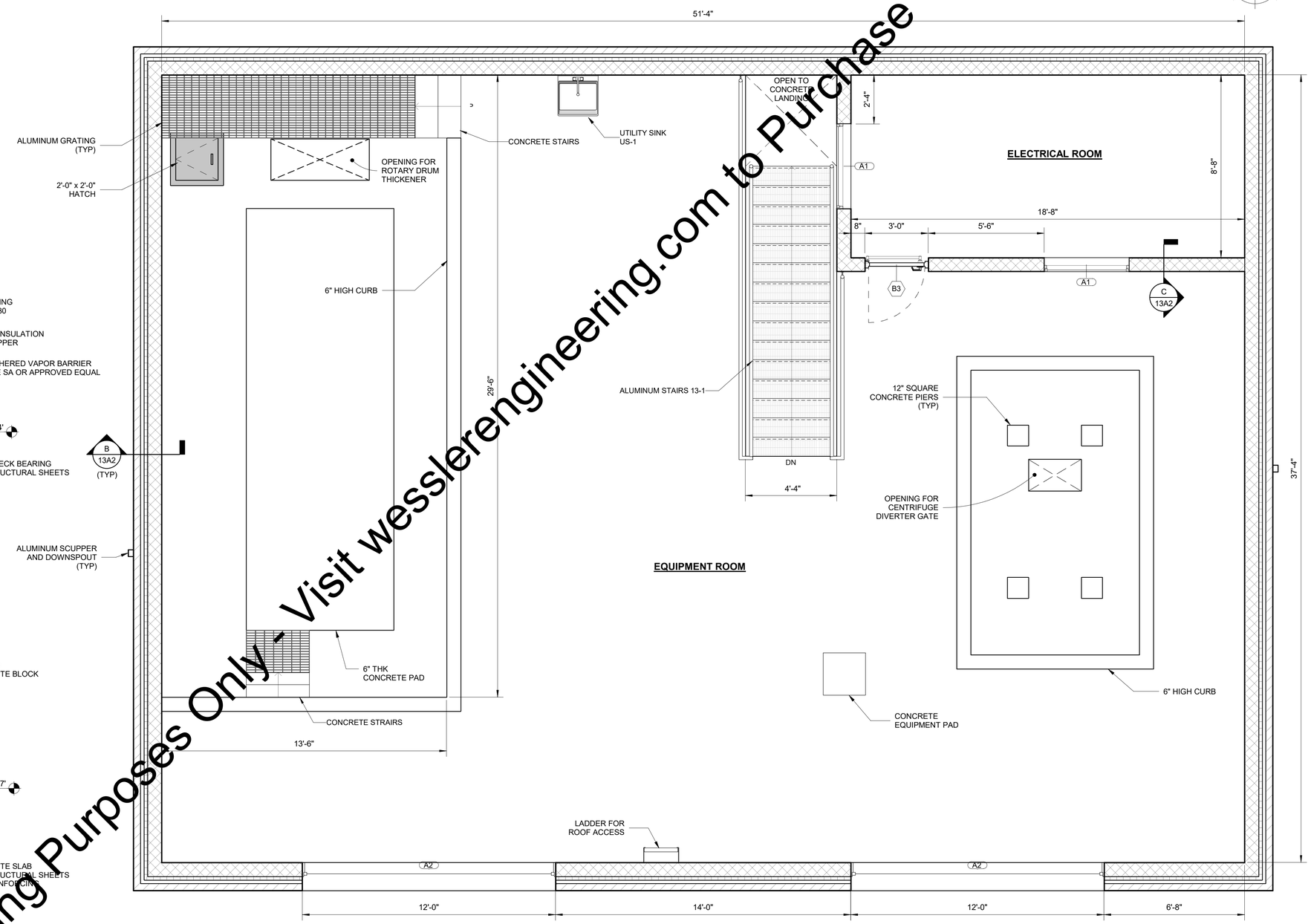

UPPER LEVEL PLAN

0 2 4 6 FT 3/8"=1'-0"

"For Viewing Purposes Only - Visit wesslerengineering.com to Purchase"

SCALE VERIFICATION	DRAWN BY	MLN
BAR IS ONE INCH LONG ON ORIGINAL DRAWING	CHECKED BY	ALT
	APPROVED BY	RWH
	ISSUE DATE	MARCH 2020
	PROJECT NUMBER	193216-04-001

NO.	DATE	INITIALS	REVISION DESCRIPTION

ROBERT W. HOLDEN, II REGISTERED No. 10000096 STATE OF INDIANA PROFESSIONAL ENGINEER 3/4/2020

WESSLER ENGINEERING

More than a Project™

WASTEWATER SYSTEM EXPANSION

CITY OF FRANKFORT, INDIANA

CONTRACT A - WASTEWATER TREATMENT PLANT

NEW THICKENING AND DEWATERING BUILDING

UPPER LEVEL PLAN

SHEET NO. **13A2**

PAGE NO. 146

Plotted: 3/4/2020 2:59:49 PM C:\Users\Mike\N\Documents\193216-New Thickening and Dewatering_CENTRAL - R19_MikenXJJWH.rvt

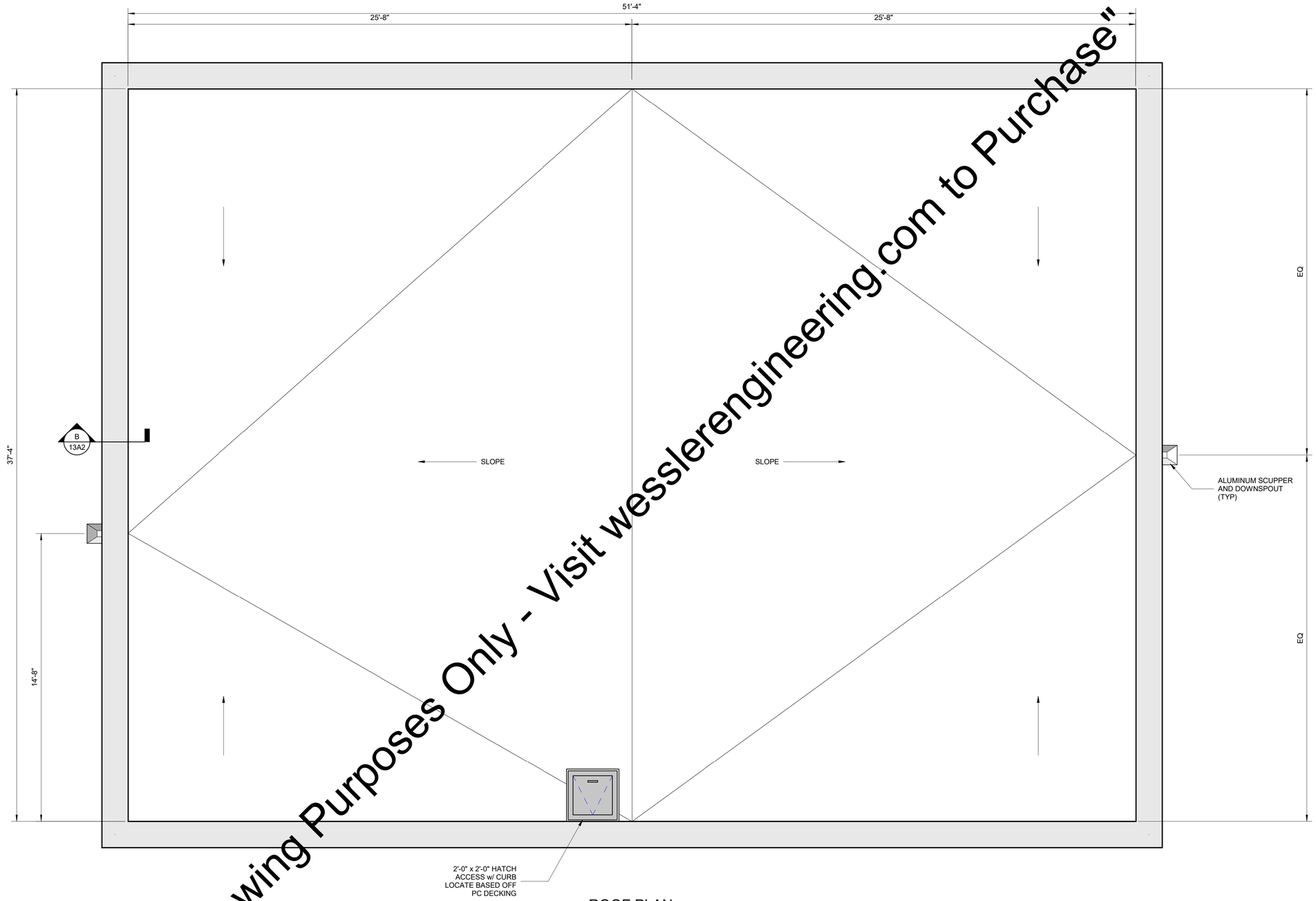

ROOF PLAN

0 2 4 6 FT
3/8"=1'-0"

"For Viewing Purposes Only - Visit wesslerengineering.com to Purchase"

SCALE VERIFICATION	DRAWN BY	JL
BAR IS ONE INCH LONG ON ORIGINAL DRAWING	CHECKED BY	ALT
	APPROVED BY	RWH
	ISSUE DATE	MARCH 2020
	PROJECT NUMBER	193216-04-001

NO.	DATE	INITIALS	REVISION DESCRIPTION

ROBERT W. HOLDEN II
REGISTERED
No. 10000096
STATE OF INDIANA
PROFESSIONAL ENGINEER
3/4/2020

WESSLER ENGINEERING
More than a Project™

WASTEWATER SYSTEM EXPANSION
CITY OF FRANKFORT, INDIANA
CONTRACT A - WASTEWATER TREATMENT PLANT

NEW THICKENING AND DEWATERING BUILDING
ROOF PLAN

SHEET NO. **13A3**

PAGE NO. 147

Plotted: 2/26/2020 2:08:38 PM C:\users\Jonathan\Documents\193216-New Thickening and Dewatering_CENTRAL - R19_JonathanL_WE.rvt

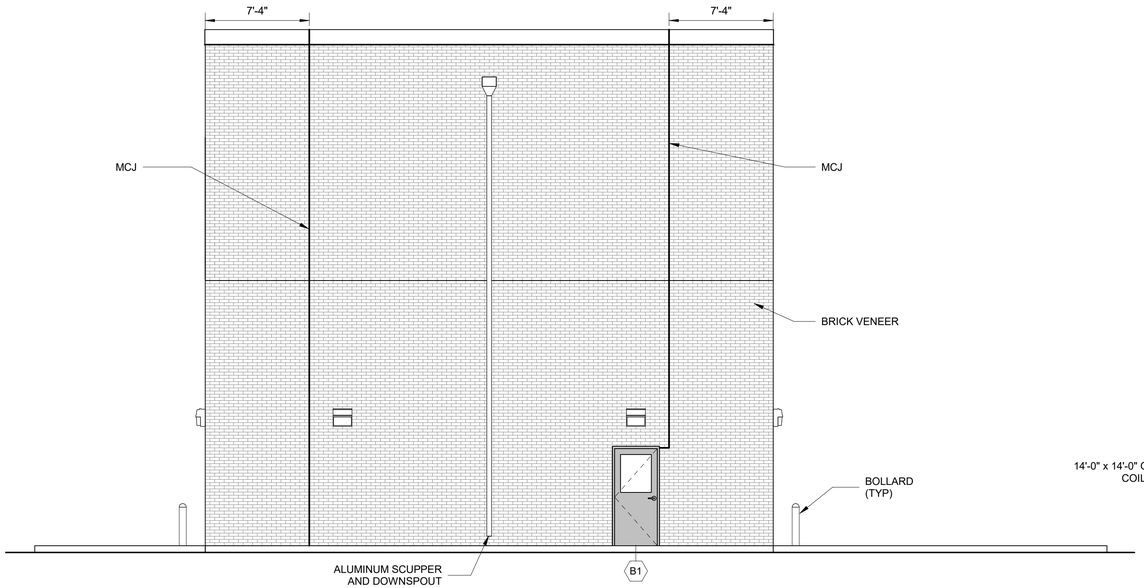

NORTH ELEVATION

0 4 8 12 FT 3/16"=1'-0"

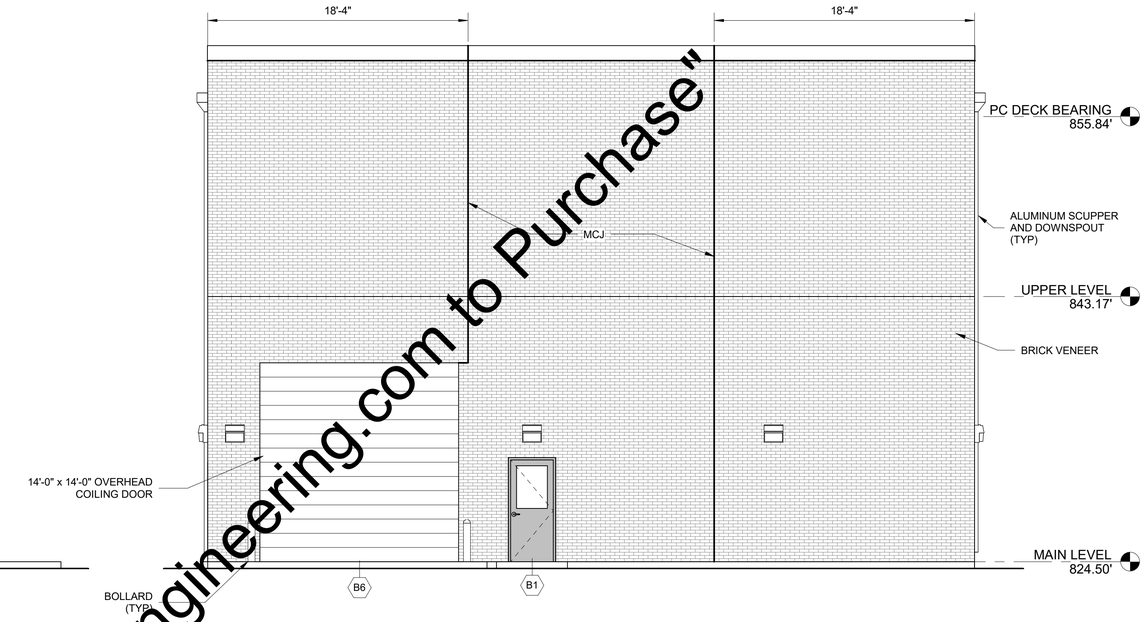

WEST ELEVATION

0 4 8 12 FT 3/16"=1'-0"

NOTE:

MCJ = MASONRY VENEER CONTROL JOINT
(NO CONTROL JOINTS IN CMU)

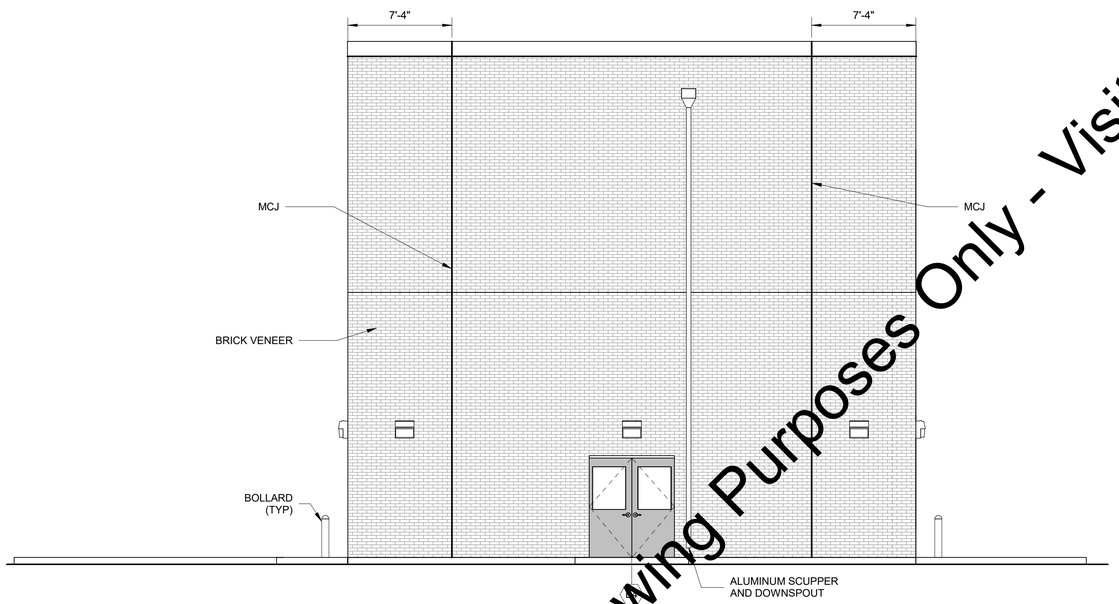

SOUTH ELEVATION

0 4 8 12 FT 3/16"=1'-0"

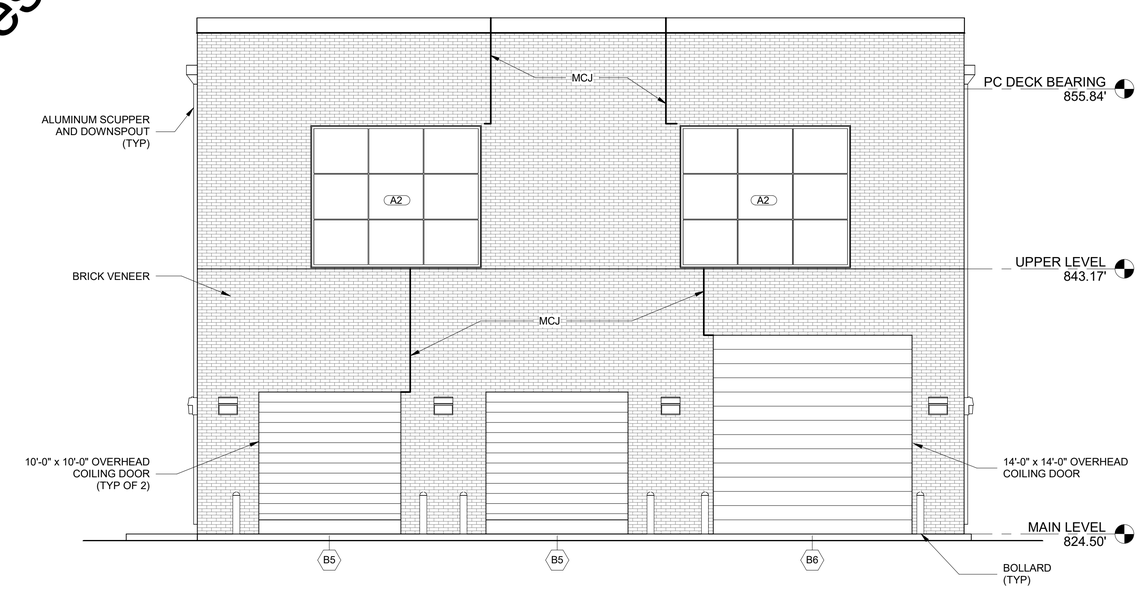

EAST ELEVATION

0 4 8 12 FT 3/16"=1'-0"

"For Viewing Purposes Only - Visit wesslerengineering.com to Purchase"

SCALE VERIFICATION	DRAWN BY	MLN
BAR IS ONE INCH LONG ON ORIGINAL DRAWING	CHECKED BY	ALT
	APPROVED BY	RWH
	ISSUE DATE	MARCH 2020
	PROJECT NUMBER	193216-04-001

NO.	DATE	INITIALS	REVISION DESCRIPTION

ROBERT W. HOLDEN, II
REGISTERED
No. 10000096
STATE OF INDIANA
PROFESSIONAL ENGINEER
3/4/2020

WESSLER ENGINEERING
More than a Project™

WASTEWATER SYSTEM EXPANSION

CITY OF FRANKFORT, INDIANA
CONTRACT A - WASTEWATER TREATMENT PLANT

NEW THICKENING AND DEWATERING BUILDING ELEVATIONS

SHEET NO. **13A4**

PAGE NO. 148

Plotted: 3/4/2020 2:55:08 PM C:\users\Jonathan\Documents\193216-New Thickening and Dewatering_CENTRAL - R19_Jonathan_WE.rvt

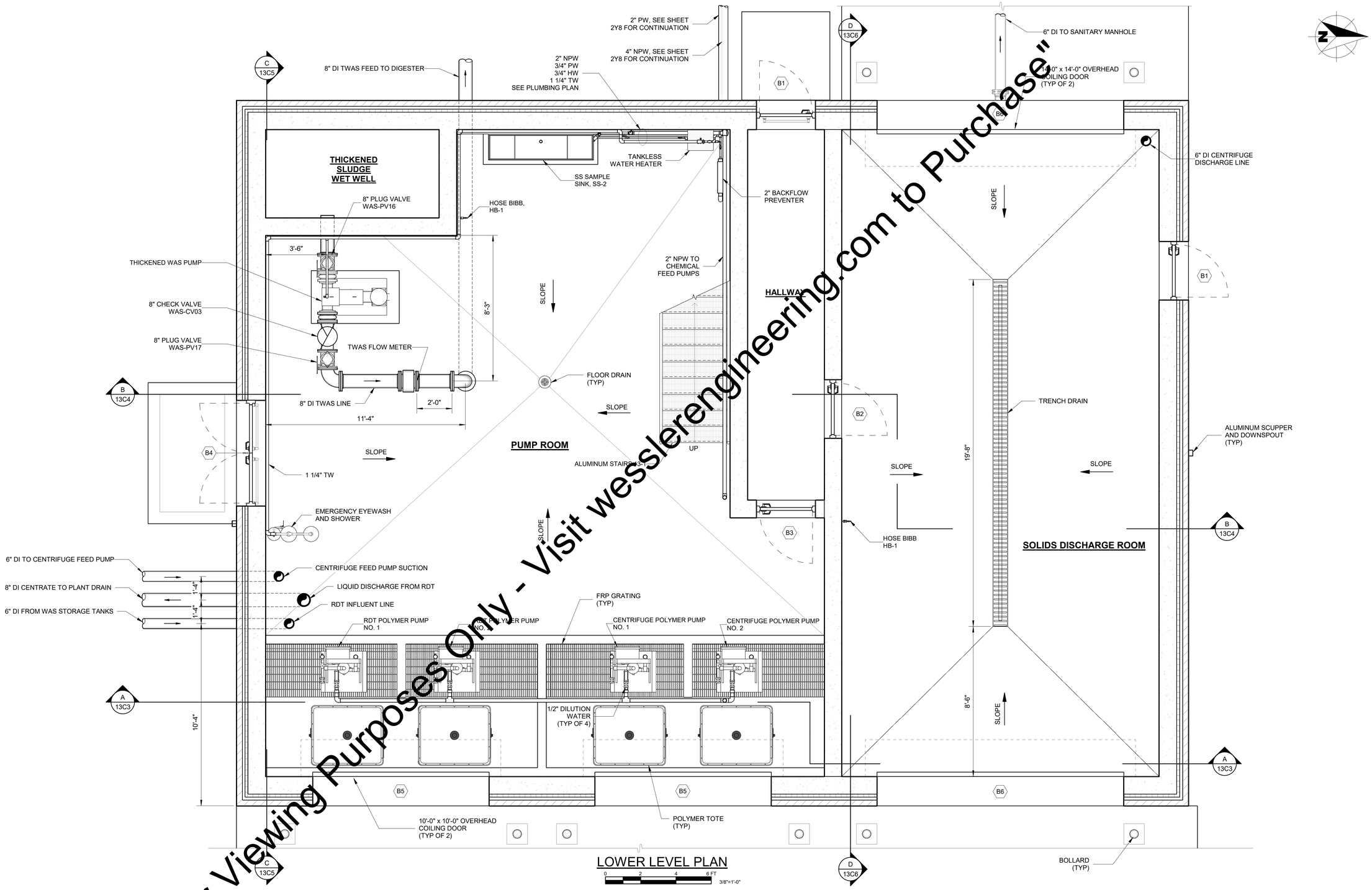

LOWER LEVEL PLAN

0 2 4 6 FT
3/8"=1'-0"

"For Viewing Purposes Only - Visit wesslerengineering.com to Purchase"

SCALE VERIFICATION	DRAWN BY	MJN
BAR IS ONE INCH LONG ON ORIGINAL DRAWING	CHECKED BY	ALT
	APPROVED BY	RWH
	ISSUE DATE	MARCH 2020
	PROJECT NUMBER	193216-04-001

NO.	DATE	INITIALS	REVISION DESCRIPTION

ROBERT W. HOLDEN, II REGISTERED No. 10000096 STATE OF INDIANA PROFESSIONAL ENGINEER 3/4/2020

WESSLER ENGINEERING
More than a Project™

WASTEWATER SYSTEM EXPANSION

CITY OF FRANKFORT, INDIANA
CONTRACT A - WASTEWATER TREATMENT PLANT

NEW THICKENING AND DEWATERING BUILDING
LOWER LEVEL PLAN

SHEET NO. 13C1

PAGE NO. 149

Plotted: 3/4/2020 3:07:29 PM C:\Users\Mike\N\Documents\193216-New Thickening and Dewatering_CENTRAL - R19_MikenXJJWH.rvt

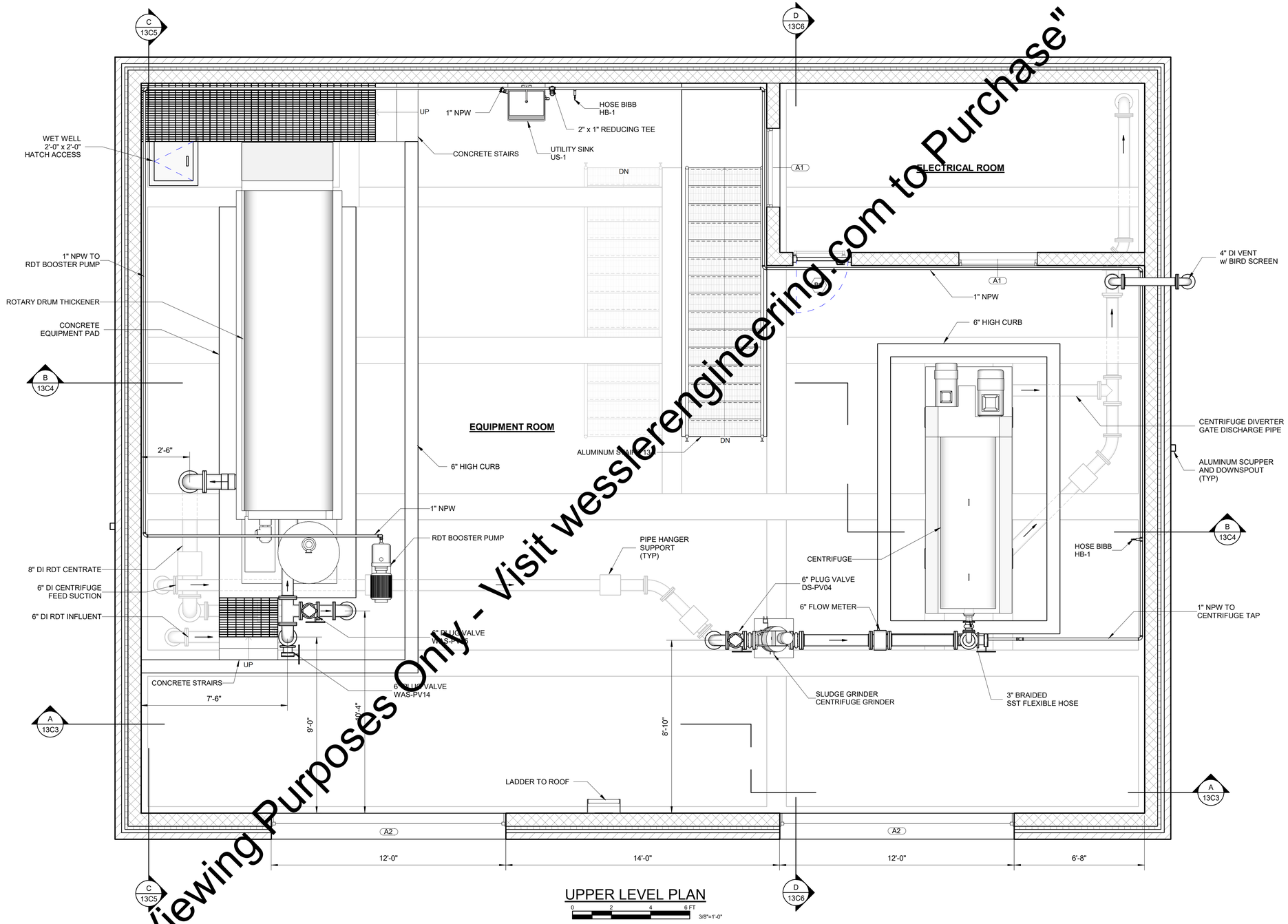

UPPER LEVEL PLAN

0 2 4 6 FT
3/8"=1'-0"

"For Viewing Purposes Only - Visit wesslerengineering.com to Purchase"

SCALE VERIFICATION	DRAWN BY	MJN
BAR IS ONE INCH LONG ON ORIGINAL DRAWING	CHECKED BY	ALT
	APPROVED BY	RWH
	ISSUE DATE	MARCH 2020
	PROJECT NUMBER	193216-04-001

NO.	DATE	INITIALS	REVISION DESCRIPTION

ROBERT W. HOLDEN II REGISTERED No. 10000096 STATE OF INDIANA PROFESSIONAL ENGINEER 3/4/2020

WESSLER ENGINEERING
More than a Project™

WASTEWATER SYSTEM EXPANSION
CITY OF FRANKFORT, INDIANA
CONTRACT A - WASTEWATER TREATMENT PLANT

NEW THICKENING AND DEWATERING BUILDING
UPPER LEVEL PLAN

SHEET NO. **13C2**

PAGE NO. 150

Plotted: 2/26/2020 2:08:47 PM C:\Users\Jonathan\Documents\193216-New Thickening and Dewatering_CENTRAL - R19_Jonathan_WE.rvt

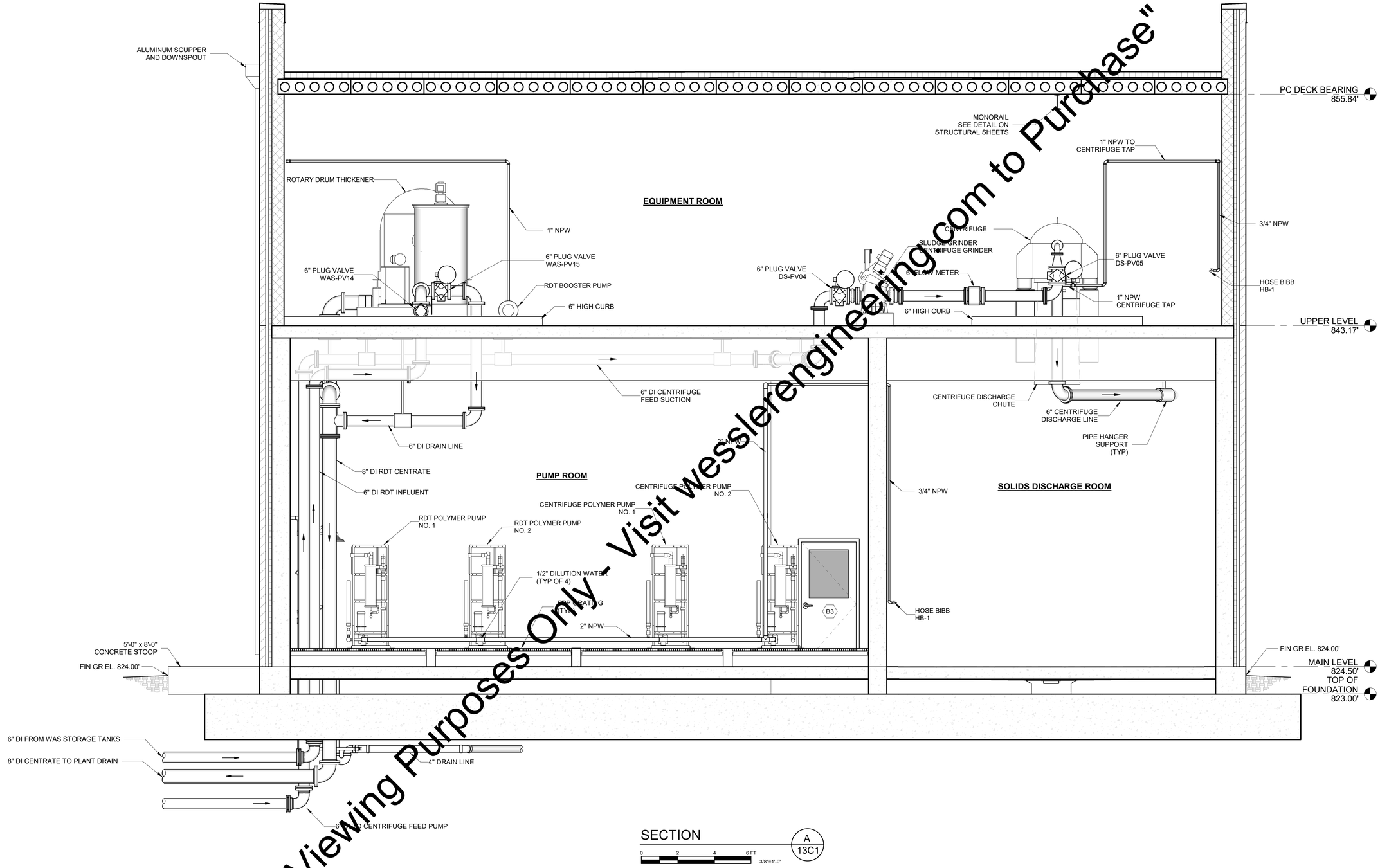

SECTION A 13C1

0 2 4 6 FT 3/8"=1'-0"

"For Viewing Purposes Only - Visit wesslerengineering.com to Purchase"

SCALE VERIFICATION	DRAWN BY	JWN
BAR IS ONE INCH LONG ON ORIGINAL DRAWING	CHECKED BY	ALT
	APPROVED BY	RWH
	ISSUE DATE	MARCH 2020
	PROJECT NUMBER	193216-04-001

NO.	DATE	INITIALS	REVISION DESCRIPTION

ROBERT W. HOLDEN, II REGISTERED No. 10000096 STATE OF INDIANA PROFESSIONAL ENGINEER 3/4/2020

WESSLER ENGINEERING

More than a Project™

WASTEWATER SYSTEM EXPANSION

CITY OF FRANKFORT, INDIANA

CONTRACT A - WASTEWATER TREATMENT PLANT

NEW THICKENING AND DEWATERING BUILDING SECTION

SHEET NO. 13C3

PAGE NO. 151

Plotted: 3/4/2020 3:06:48 PM C:\users\MikeN\Documents\193216-New Thickening and Dewatering_CENTRAL - R19_MikenXJJWH.rvt

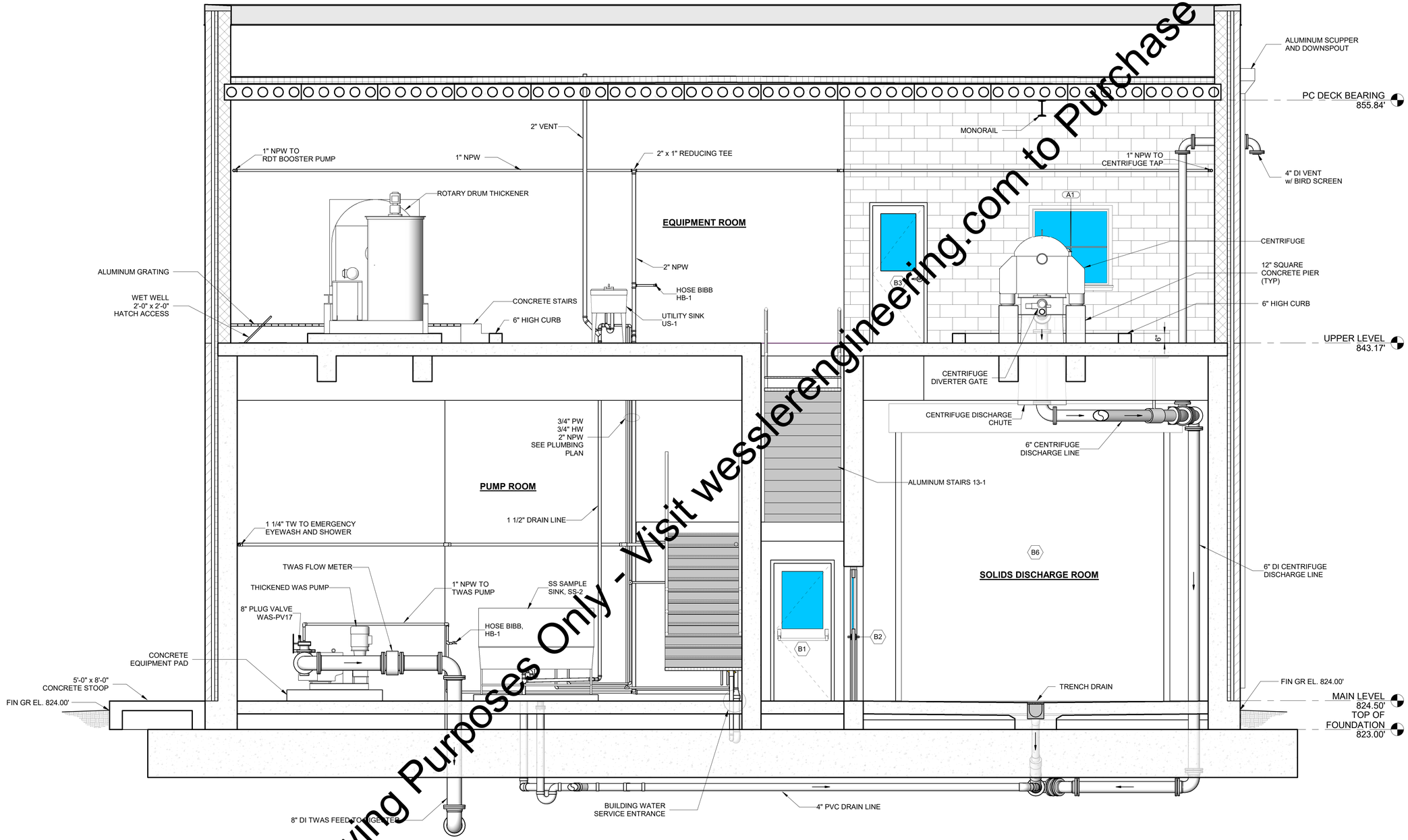

SECTION B / 13C1

0 2 4 6 FT
3/8"=1'-0"

"For Viewing Purposes Only - Visit wesslerengineering.com to Purchase"

SCALE VERIFICATION	DRAWN BY	JWLN
BAR IS ONE INCH LONG ON ORIGINAL DRAWING	CHECKED BY	ALT
	APPROVED BY	RWH
	ISSUE DATE	MARCH 2020
	PROJECT NUMBER	193216-04-001

NO.	DATE	INITIALS	REVISION DESCRIPTION

ROBERT W. HOLDEN, II REGISTERED No. 10000096 STATE OF INDIANA PROFESSIONAL ENGINEER 3/4/2020

WESSLER ENGINEERING
More than a Project™

WASTEWATER SYSTEM EXPANSION

CITY OF FRANKFORT, INDIANA
CONTRACT A - WASTEWATER TREATMENT PLANT

NEW THICKENING AND DEWATERING BUILDING SECTION

SHEET NO. 13C4

PAGE NO. 152

Plotted: 2/26/2020 2:08:54 PM C:\users\Jonathan\Documents\193216-New Thickening and Dewatering_CENTRAL - R19_JonathanL_WE.rvt

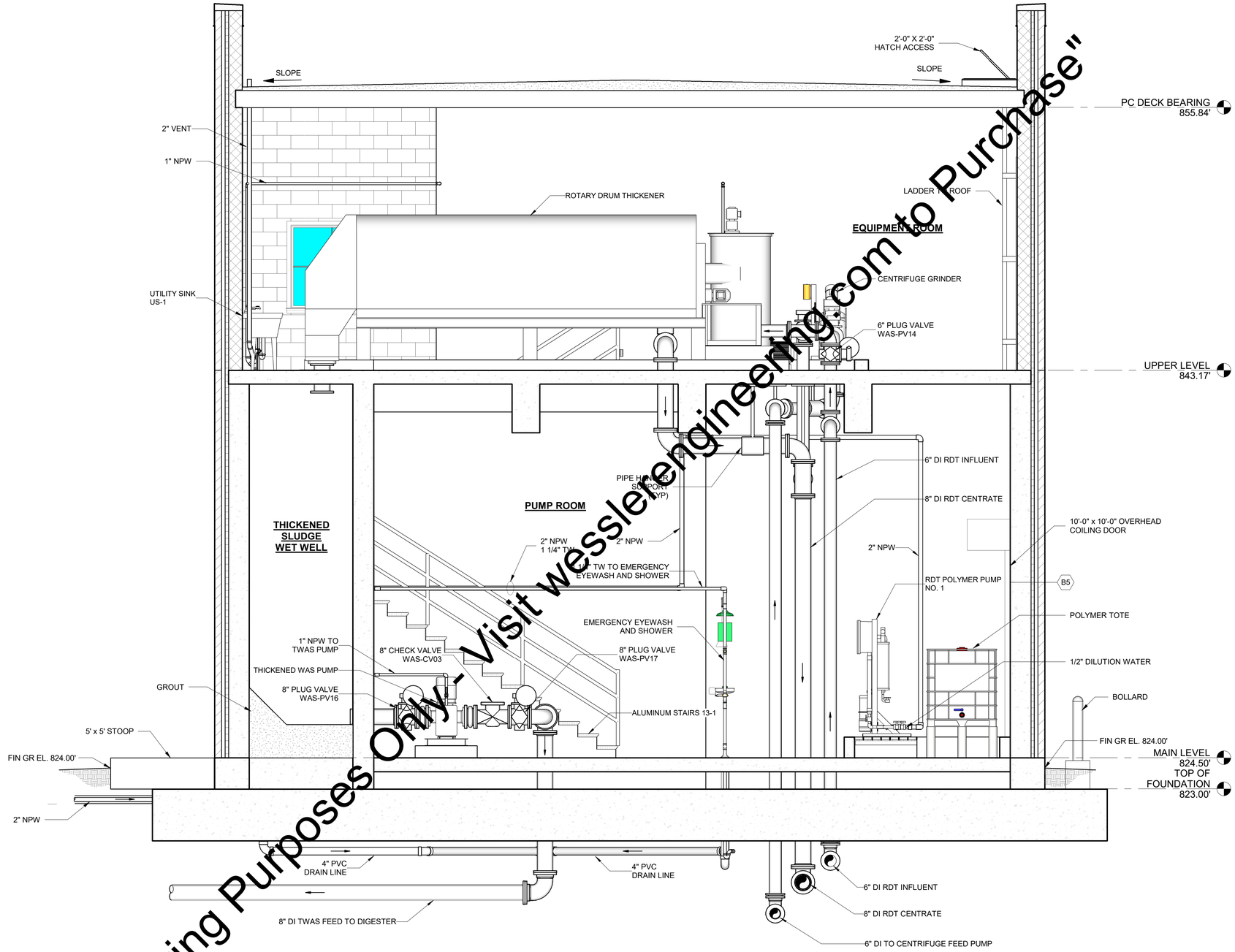

SECTION C

C
13C1

0 2 4 6 FT
3/8"=1'-0"

"For Viewing Purposes Only - Visit wessleengineering.com to Purchase"

SCALE VERIFICATION	DRAWN BY	MLN
BAR IS ONE INCH LONG ON ORIGINAL DRAWING	CHECKED BY	ALT
	APPROVED BY	RWH
	ISSUE DATE	MARCH 2020
	PROJECT NUMBER	193216-04-001

NO.	DATE	INITIALS	REVISION DESCRIPTION

ROBERT W. HOLDEN, II
REGISTERED
No. 10000096
STATE OF INDIANA
PROFESSIONAL ENGINEER
3/4/2020

WESSLER ENGINEERING
More than a Project™

WASTEWATER SYSTEM EXPANSION
CITY OF FRANKFORT, INDIANA
CONTRACT A - WASTEWATER TREATMENT PLANT

NEW THICKENING AND DEWATERING BUILDING
SECTION

SHEET NO.
13C5

PAGE NO.
153

Plotted: 2/26/2020 2:08:57 PM C:\users\JonathanL\Documents\193216-New Thickening and Dewatering_CENTRAL - R19_JonathanL_WE.rvt

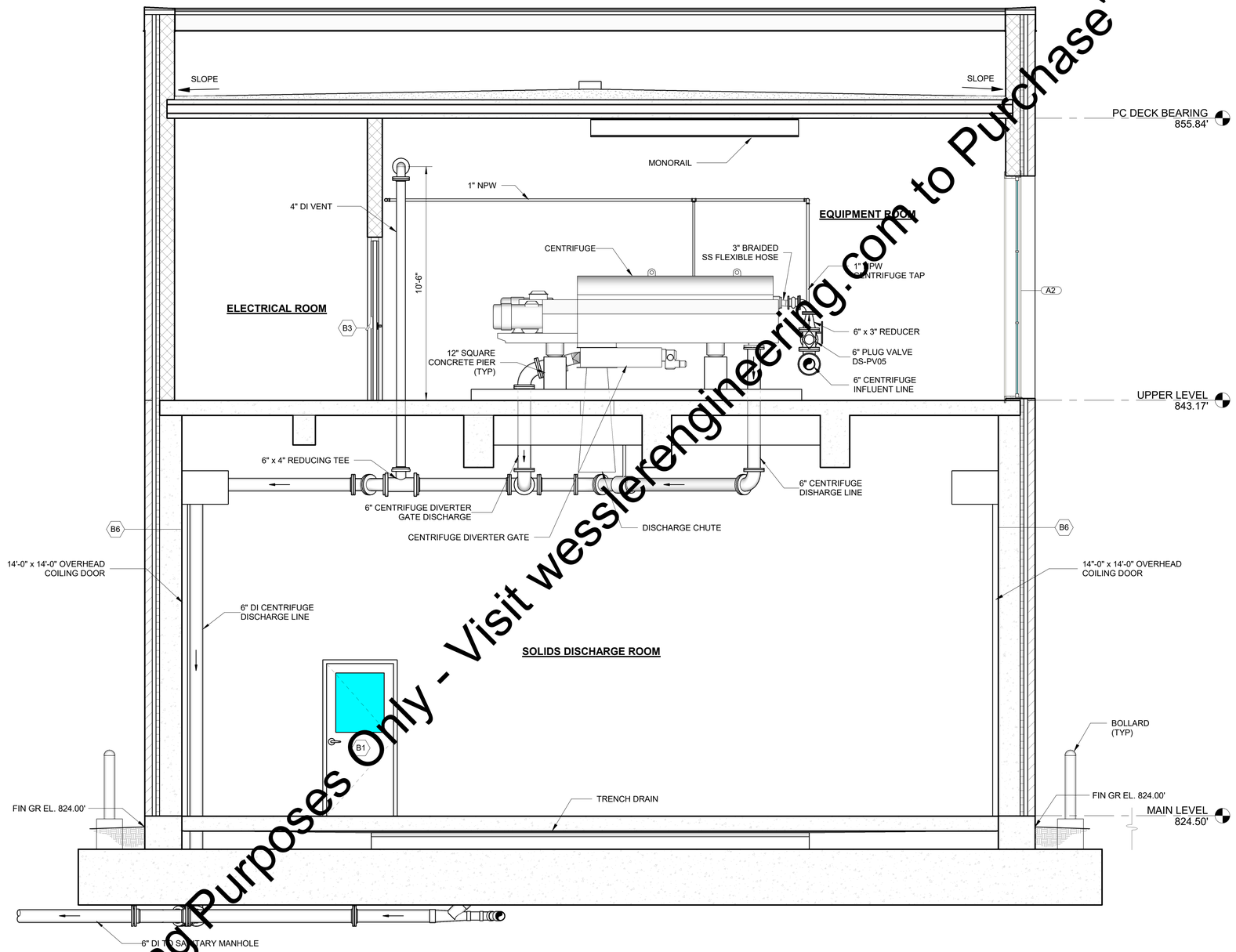

SECTION D 13C1

0 2 4 6 FT 3/8"=1'-0"

"For Viewing Purposes Only - Visit wesslerengineering.com to Purchase"

SCALE VERIFICATION	DRAWN BY	MLN
BAR IS ONE INCH LONG ON ORIGINAL DRAWING	CHECKED BY	ALT
	APPROVED BY	RWH
	ISSUE DATE	MARCH 2020
	PROJECT NUMBER	193216-04-001

NO.	DATE	INITIALS	REVISION DESCRIPTION

ROBERT W. HOLDEN II REGISTERED No. 10000096 STATE OF INDIANA PROFESSIONAL ENGINEER 3/4/2020

WESSLER ENGINEERING
More than a Project™

WASTEWATER SYSTEM EXPANSION
CITY OF FRANKFORT, INDIANA
CONTRACT A - WASTEWATER TREATMENT PLANT

NEW THICKENING AND DEWATERING BUILDING
SECTION AND DETAILS

SHEET NO. **13C6**

PAGE NO. 154

Plotted: 2/26/2020 2:08:59 PM C:\users\JonathanL\Documents\193216-New Thickening and Dewatering_CENTRAL - R19_JonathanL_WE.rvt

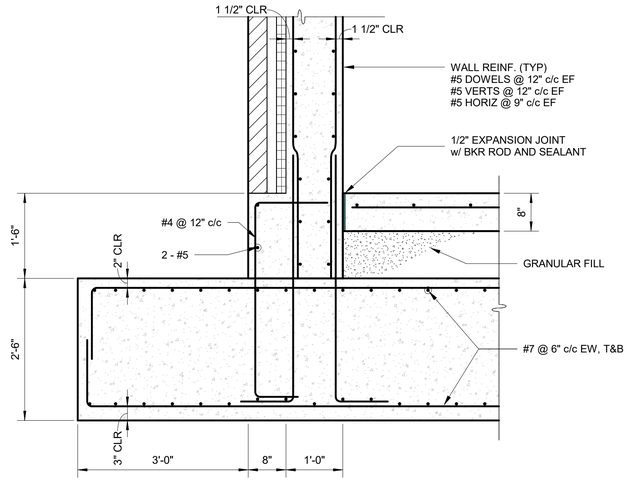

SECTION A 13S1

0 1 2 3 FT 3/4"=1'-0"

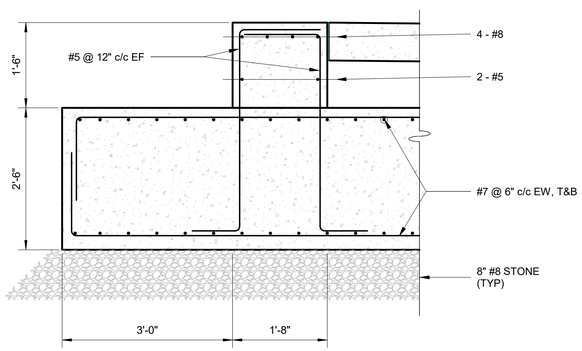

SECTION
(TYP FOR ALL
OVERHEAD DOORS)

B 13S1

0 1 2 4 FT 1/2"=1'-0"

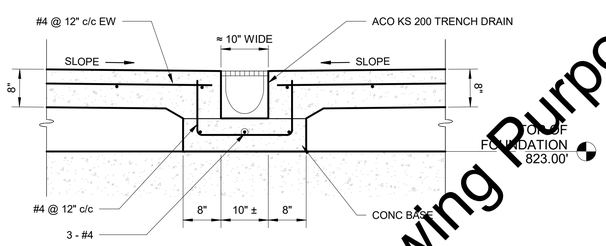

SECTION

C 13S1

0 1 2 3 FT 3/4"=1'-0"

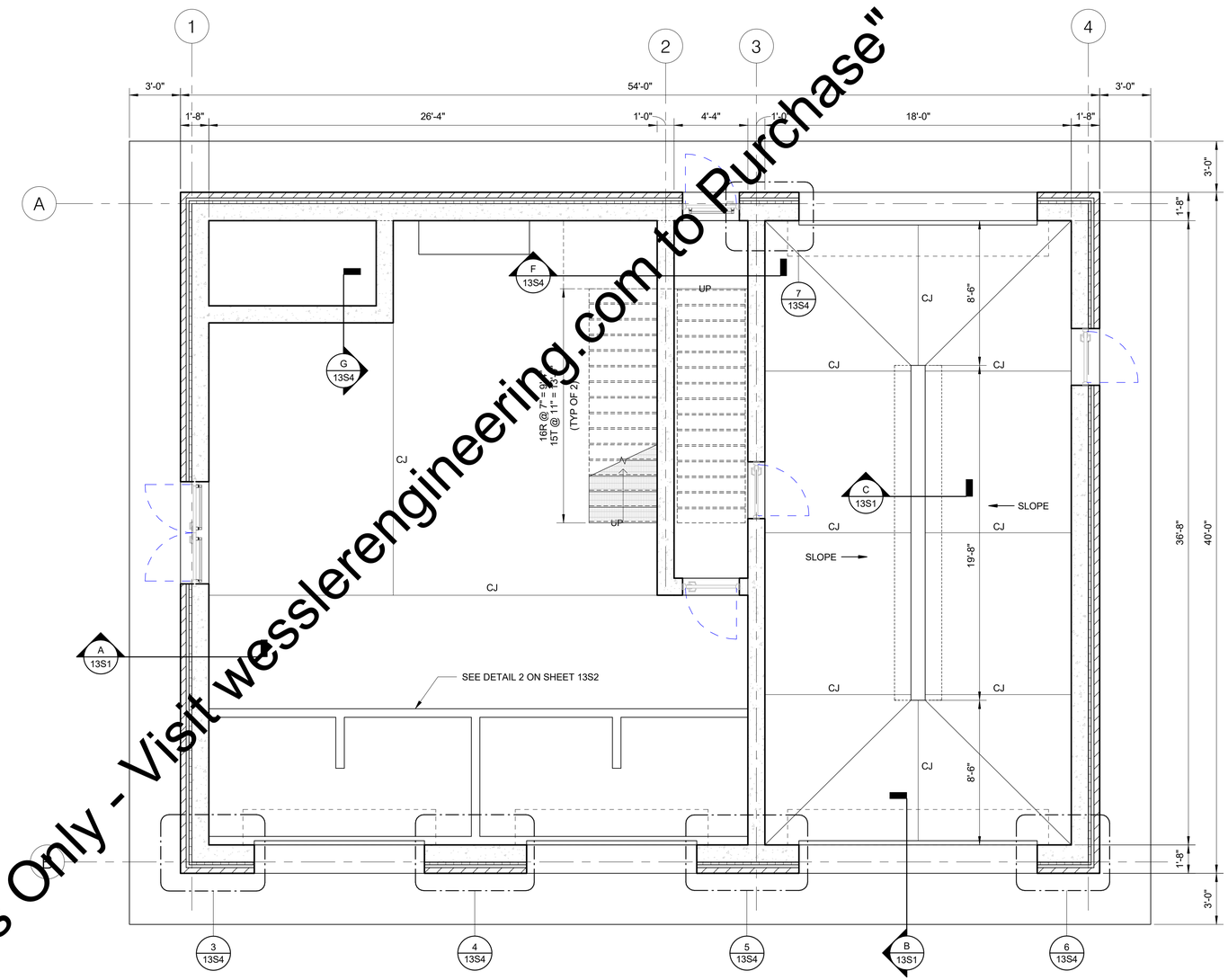

SEISMIC SHEAR V = 90k

FOUNDATION PLAN

0 2 4 8 FT 1/4"=1'-0"

NOTE:

(CJ) CONTROL JOINTS SHOWN ARE IN SLAB-ON-GRADE.

FOR STRUCTURAL GENERAL NOTES SEE 1S1
FOR STANDARD DETAILS SEE AREA 16S SHEETS

"For Viewing Purposes Only - Visit wesslerengineering.com to Purchase"

SCALE VERIFICATION	DRAWN BY	JL
BAR IS ONE INCH LONG ON ORIGINAL DRAWING	CHECKED BY	JRB
	APPROVED BY	JRB
	ISSUE DATE	MARCH 2020
	PROJECT NUMBER	193216-04-001

NO.	DATE	INITIALS	REVISION DESCRIPTION

JEFFREY ROSS BALLARD REGISTERED No. 60860191 STATE OF INDIANA PROFESSIONAL ENGINEER 3/4/2020

WESSLER ENGINEERING
More than a Project™

WASTEWATER SYSTEM EXPANSION
CITY OF FRANKFORT, INDIANA
CONTRACT A - WASTEWATER TREATMENT PLANT

NEW THICKENING AND DEWATERING BUILDING
FOUNDATION PLAN

SHEET NO. **13S1**

PAGE NO. 155

Plotted: 2/26/2020 2:09:13 PM C:\users\JonathanL\Documents\193216-New Thickening and Dewatering_CENTRAL - R19_JonathanL_WE.rvt

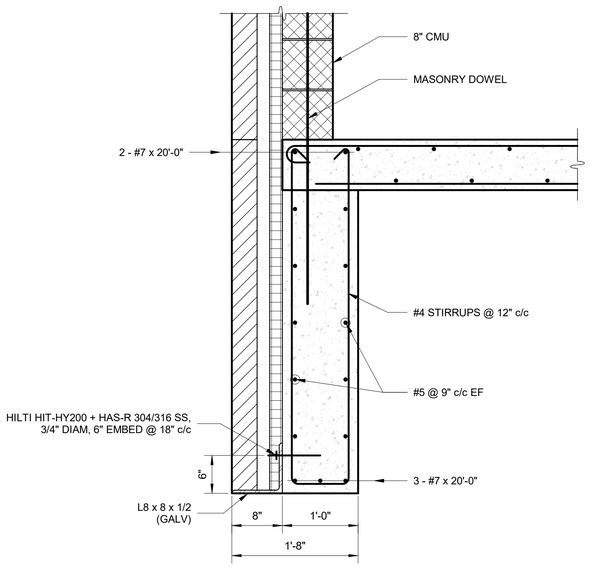

SECTION D 13S6

0 1/2 1 2 FT 1"=1'-0"

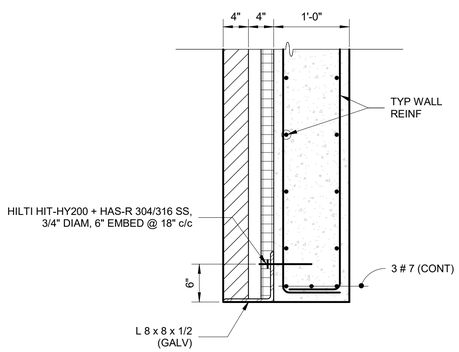

NOTE:

VENEER SUPPORT L AND ANCHORS ARE TYPICAL FOR ALL CONCRETE WALL OPENINGS.

SECTION Q 13S6

0 1/2 1 2 FT 1"=1'-0"

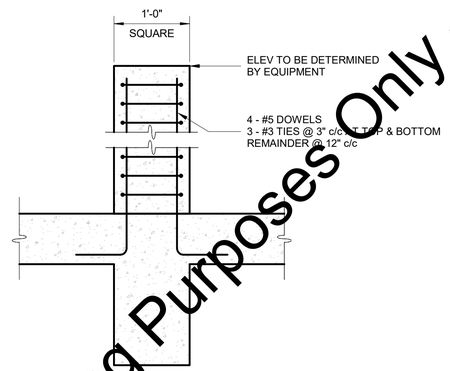

CENTRIFUGE PEDESTALS: MAX LOAD 4100lbs INCLUDES DYNAMIC

PEDESTAL DETAIL 1

0 1/2 1 2 FT 1"=1'-0"

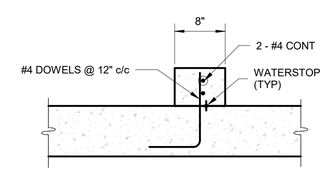

CURB DETAIL 2

0 1/2 1 2 FT 1"=1'-0"

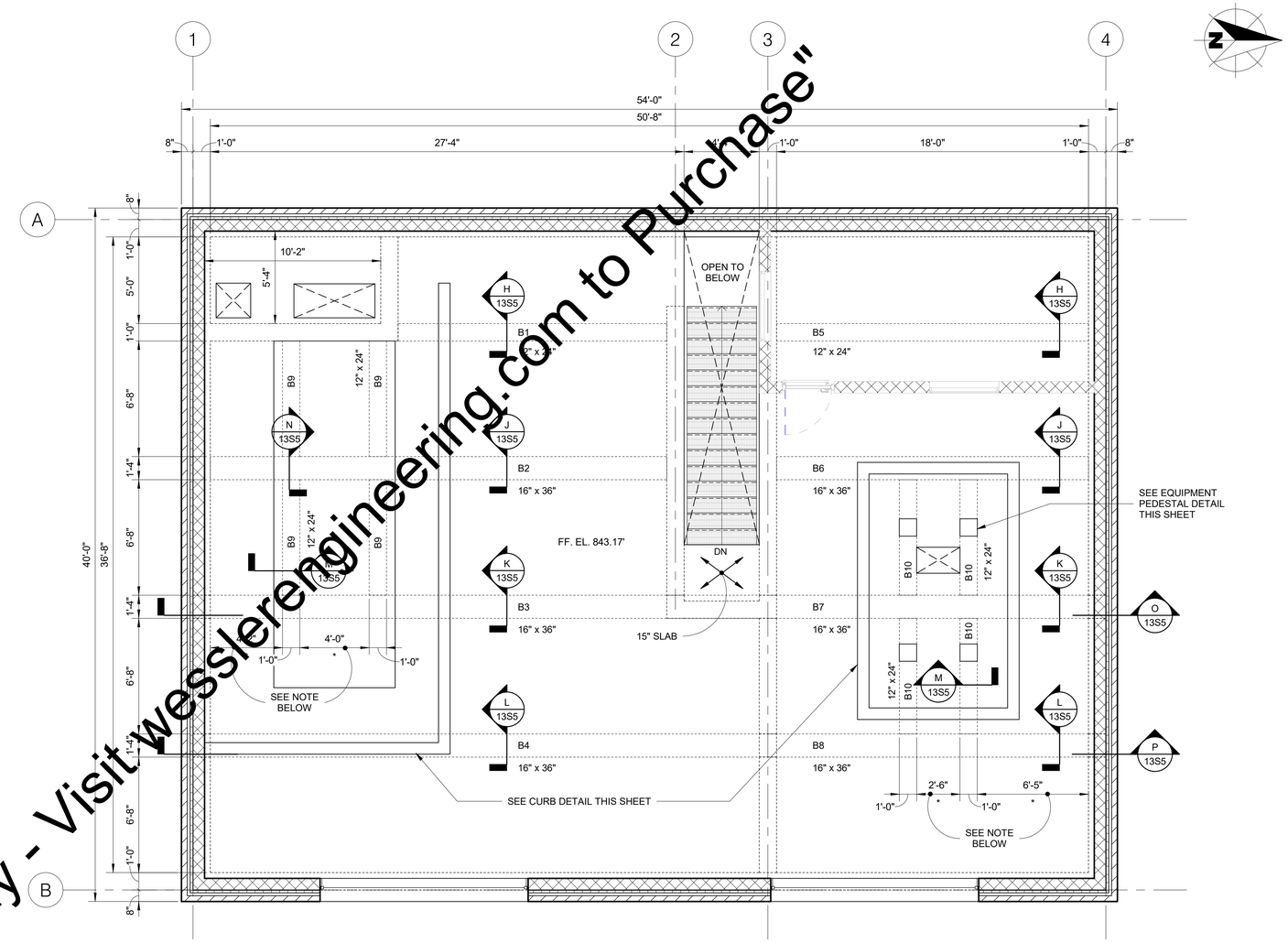

FLOOR LL = 250 PSF
* BEAM LOCATIONS ARE DEPENDENT ON EQUIPMENT FURNISHED.

UPPER LEVEL FRAMING PLAN

0 2 4 8 FT 1/4"=1'-0"

FOR STRUCTURAL GENERAL NOTES SEE 1S1
FOR STANDARD DETAILS SEE AREA 16S SHEETS

SCALE VERIFICATION	DRAWN BY	JL
BAR IS ONE INCH LONG ON ORIGINAL DRAWING	CHECKED BY	JRB
	APPROVED BY	JRB
	ISSUE DATE	MARCH 2020
	PROJECT NUMBER	193216-04-001

NO.	DATE	INITIALS	REVISION DESCRIPTION

JEFFREY ROSS BALLARD REGISTERED No. 60860191 STATE OF INDIANA PROFESSIONAL ENGINEER 3/4/2020

WESSLER ENGINEERING
More than a Project™

WASTEWATER SYSTEM EXPANSION
CITY OF FRANKFORT, INDIANA
CONTRACT A - WASTEWATER TREATMENT PLANT

NEW THICKENING AND DEWATERING BUILDING
FRAMING PLAN

SHEET NO. **13S2**

PAGE NO. 156

"For Viewing Purposes Only - Visit wesslerengineering.com to Purchase"

Plotted: 2/26/2020 2:09:13 PM C:\users\Jonathan\Documents\193216-New Thickening and Dewatering_CENTRAL - R19_JonathanL_WE.rvt

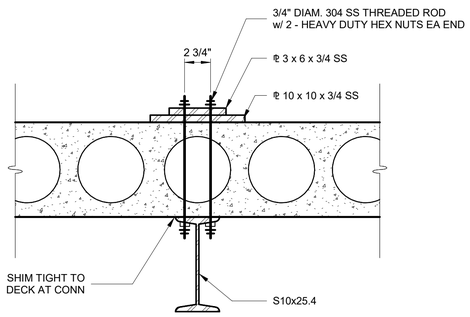

SERVICE LOAD PER CONN = 6.88k

MONORAIL DETAIL

E / 13S3

0 1/2 1 1 1/2 FT
1 1/2"=1'-0"

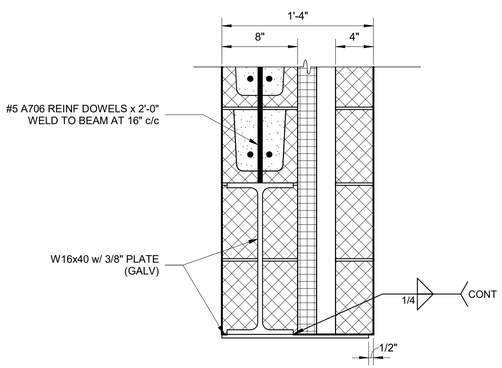

SECTION

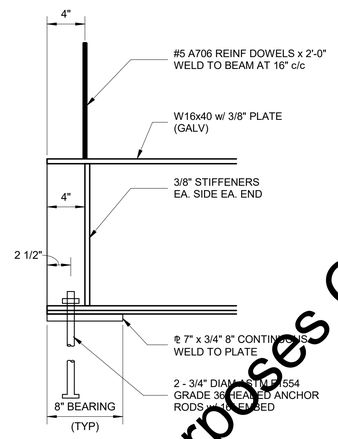

ELEVATION

DETAIL

0 1/2 1 1 1/2 FT
1 1/2"=1'-0"

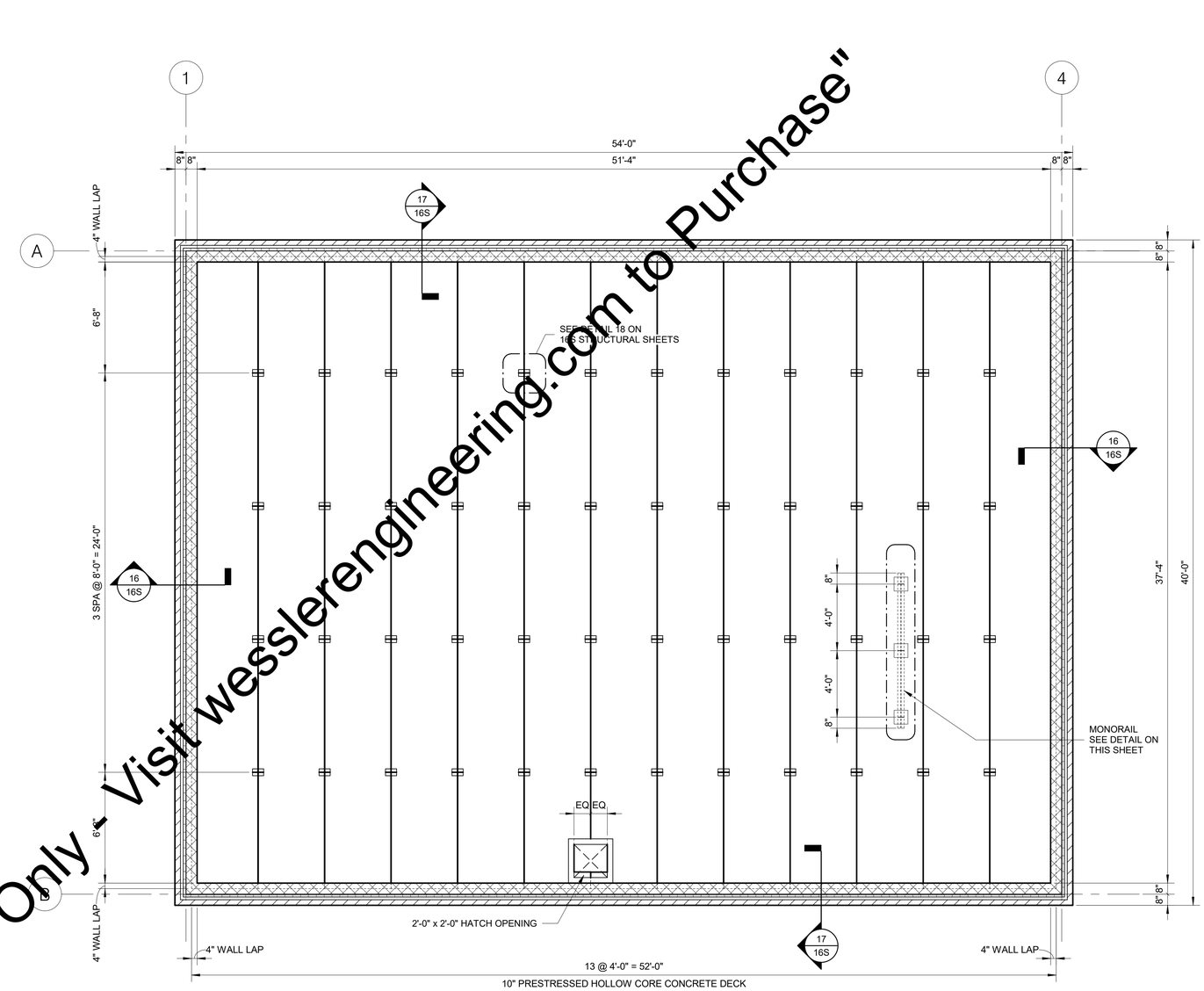

ROOF FRAMING PLAN

0 2 4 8 FT
1/4"=1'-0"

FOR STRUCTURAL GENERAL NOTES SEE 1S1
FOR STANDARD DETAILS SEE AREA 16S SHEETS

SCALE VERIFICATION	DRAWN BY	JL
BAR IS ONE INCH LONG ON ORIGINAL DRAWING	CHECKED BY	JRB
	APPROVED BY	JRB
	ISSUE DATE	MARCH 2020
	PROJECT NUMBER	193216-04-001

NO.	DATE	INITIALS	REVISION DESCRIPTION

JEFFREY ROSS BALLARD
REGISTERED
No. 60860191
STATE OF INDIANA
PROFESSIONAL ENGINEER
3/4/2020

WESSLER ENGINEERING
More than a Project™

WASTEWATER SYSTEM EXPANSION
CITY OF FRANKFORT, INDIANA
CONTRACT A - WASTEWATER TREATMENT PLANT

NEW THICKENING AND DEWATERING BUILDING
ROOF FRAMING PLAN

SHEET NO. **13S3**
PAGE NO. 157

Plotted: 2/26/2020 2:09:14 PM C:\users\JonathanL\Documents\193216-New Thickening and Dewatering_CENTRAL - R19_JonathanL_WE.rvt

"For Viewing Purposes Only - Visit wesslerengineering.com to Purchase"

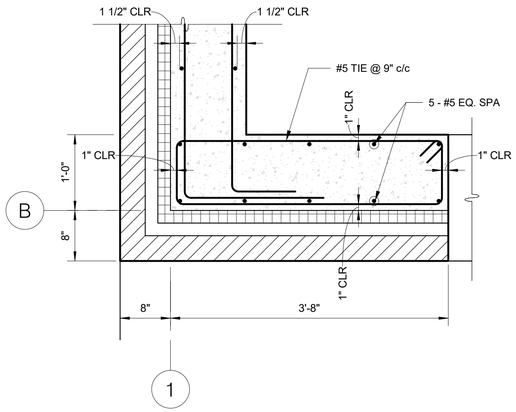

DETAIL 3 / 13S1

0 1/2 1 2 FT 1"=1'-0"

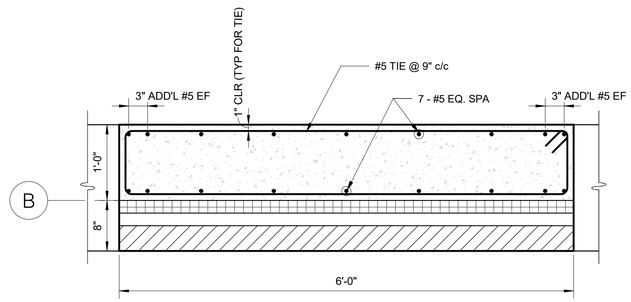

DETAIL 4 / 13S1

0 1/2 1 2 FT 1"=1'-0"

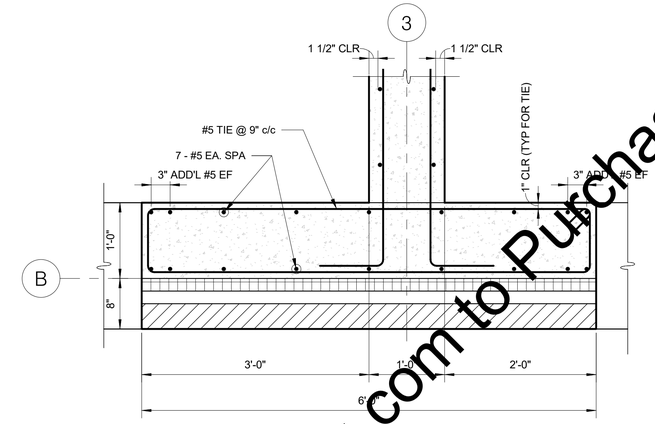

DETAIL 5 / 13S1

0 1/2 1 2 FT 1"=1'-0"

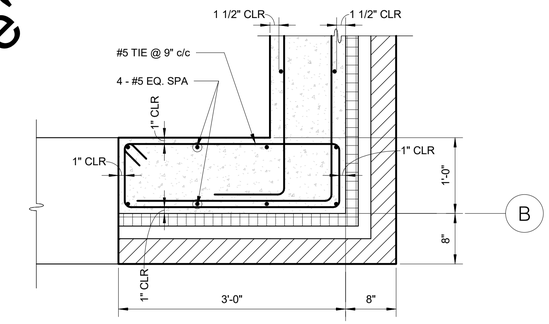

NOTE:

SIMILAR AT GRID LINE CORNER A4.

DETAIL 6 / 13S1

0 1/2 1 2 FT 1"=1'-0"

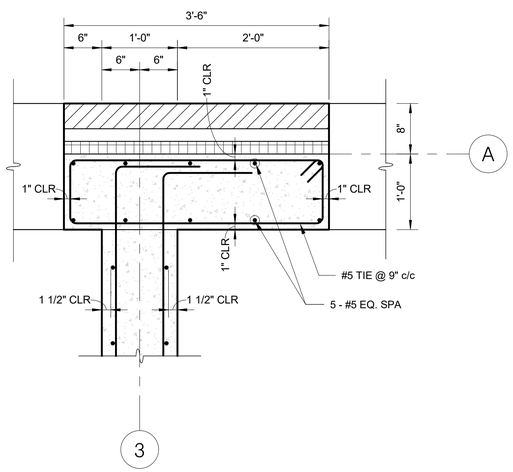

DETAIL 7 / 13S1

0 1/2 1 2 FT 1"=1'-0"

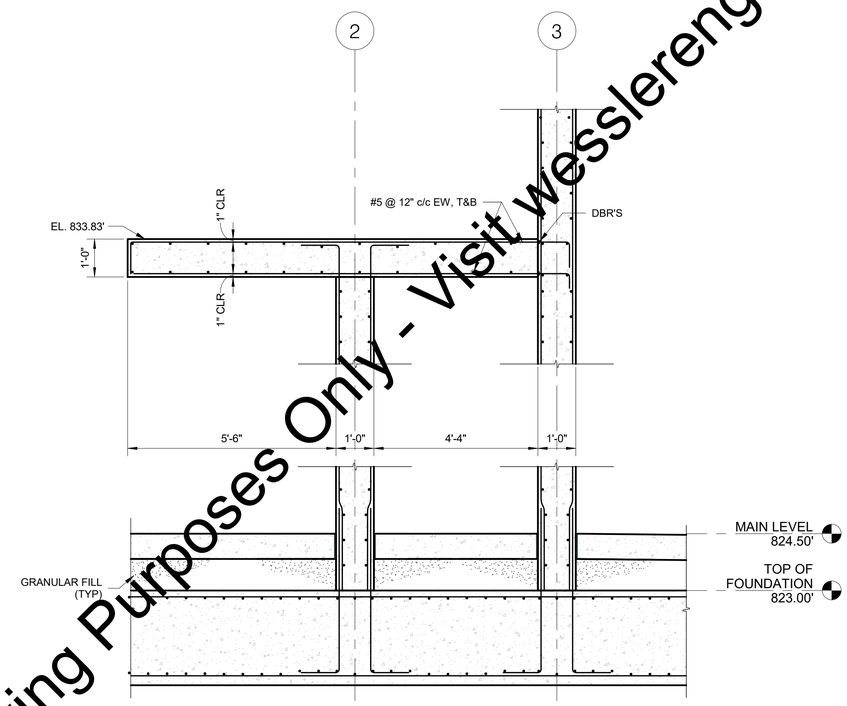

SECTION F / 13S1

0 1 2 4 FT 1/2"=1'-0"

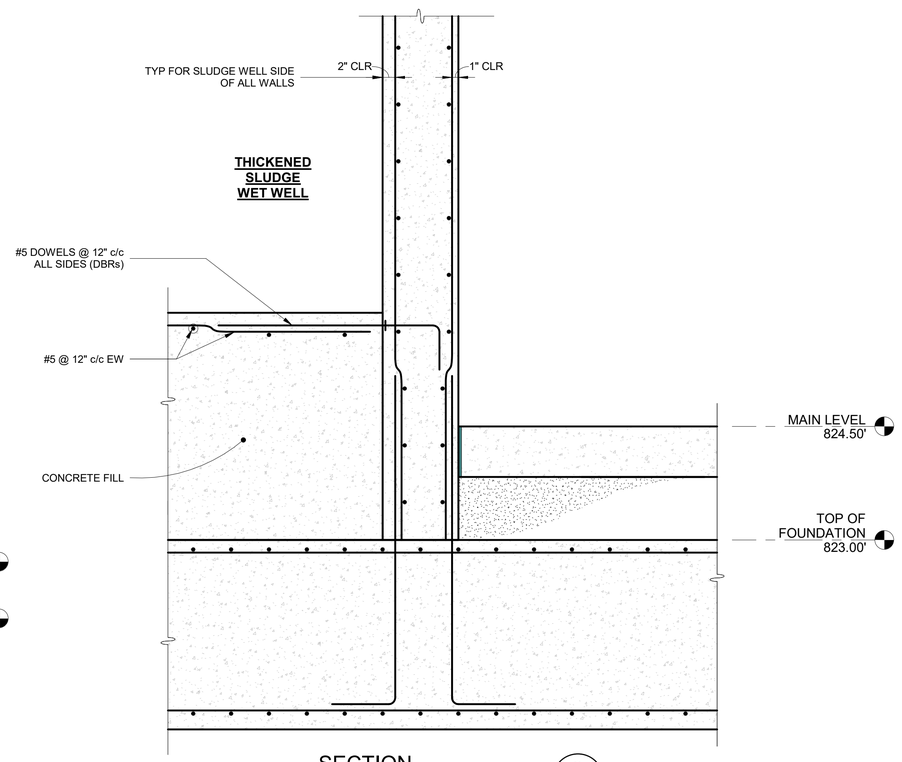

SECTION G / 13S1

0 1/2 1 2 FT 1"=1'-0"

FOR STRUCTURAL GENERAL NOTES SEE 1S1
FOR STANDARD DETAILS SEE AREA 16S SHEETS

SCALE VERIFICATION	DRAWN BY	JL
BAR IS ONE INCH LONG ON ORIGINAL DRAWING	CHECKED BY	JRB
	APPROVED BY	JRB
	ISSUE DATE	MARCH 2020
	PROJECT NUMBER	193216-04-001

NO.	DATE	INITIALS	REVISION DESCRIPTION

JEFFREY ROSS BALLARD REGISTERED No. 60860191 STATE OF INDIANA PROFESSIONAL ENGINEER 3/4/2020

WESSLER ENGINEERING

More than a Project™

WASTEWATER SYSTEM EXPANSION

CITY OF FRANKFORT, INDIANA

CONTRACT A - WASTEWATER TREATMENT PLANT

NEW THICKENING AND DEWATERING BUILDING

STRUCTURAL SECTIONS

SHEET NO. **13S4**

PAGE NO. 158

Plotted: 2/26/2020 2:09:15 PM C:\users\JonathanL\Documents\193216-New Thickening and Dewatering_CENTRAL - R19_JonathanL_WE.rvt

"For Viewing Purposes Only - Visit wesslerengineering.com to Purchase"

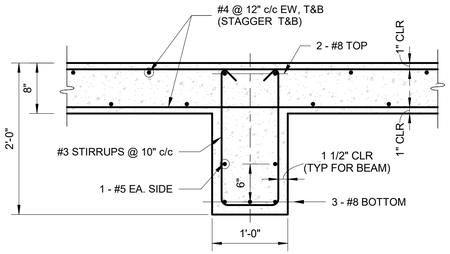

SECTION
BEAM B1 & B5 — H / 13S2

0 1/2 1 2 FT 1"=1'-0"

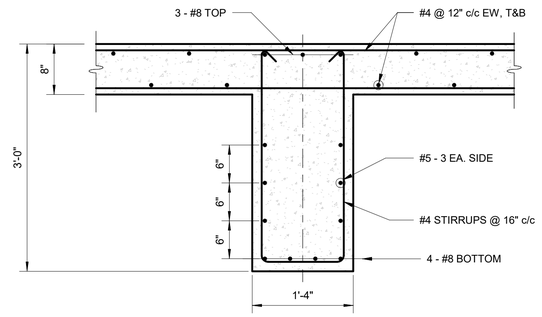

SECTION
BEAM B2 & B6 — J / 13S2

0 1/2 1 2 FT 1"=1'-0"

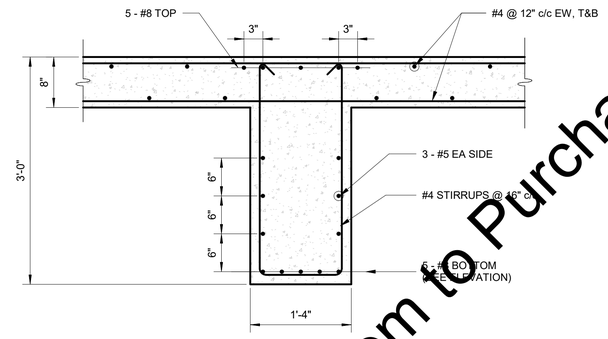

SECTION
BEAM B3 & B7 — K / 13S2

0 1/2 1 2 FT 1"=1'-0"

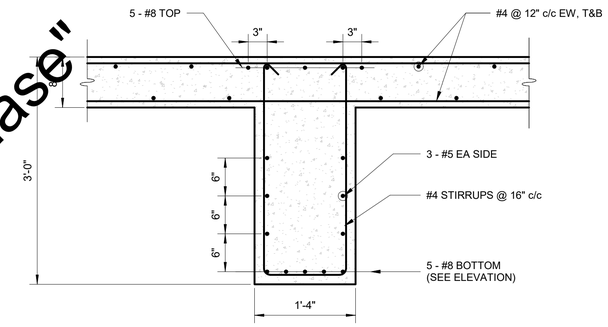

SECTION
BEAM B4 & B8 — L / 13S2

0 1/2 1 2 FT 1"=1'-0"

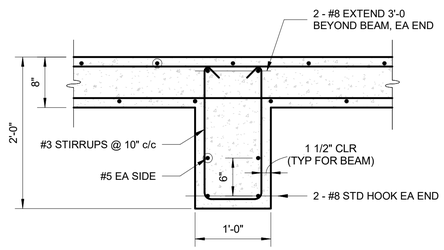

SECTION
BEAM B9 & B10 — M / 13S2

0 1/2 1 2 FT 1"=1'-0"

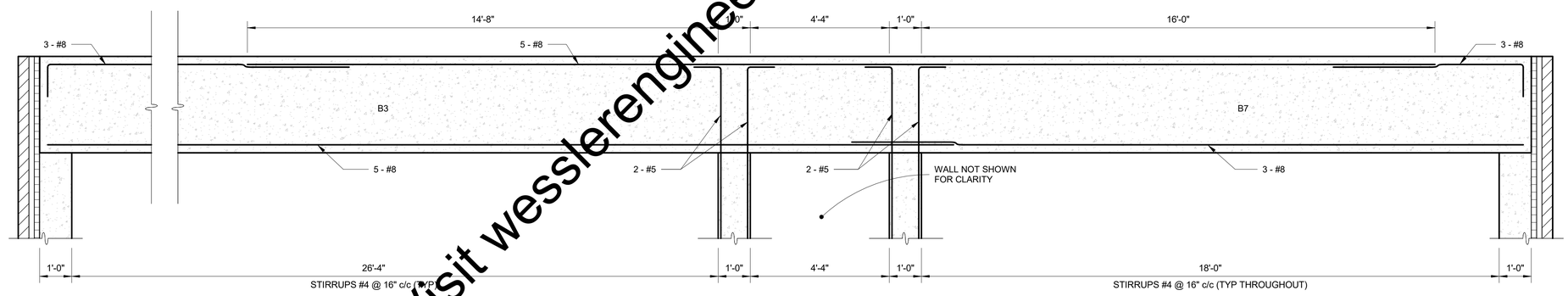

SECTION
BEAM B3 & B7 — O / 13S2

0 1 2 4 FT 1/2"=1'-0"

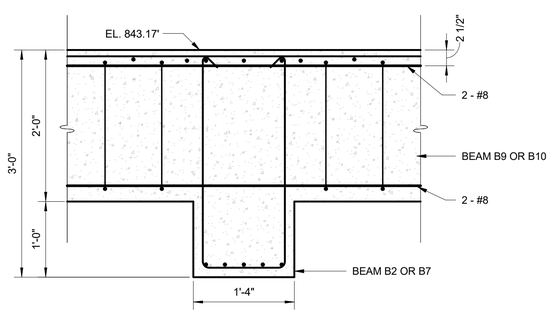

SECTION
BEAM B9 & B10 — N / 13S2

0 1/2 1 2 FT 1"=1'-0"

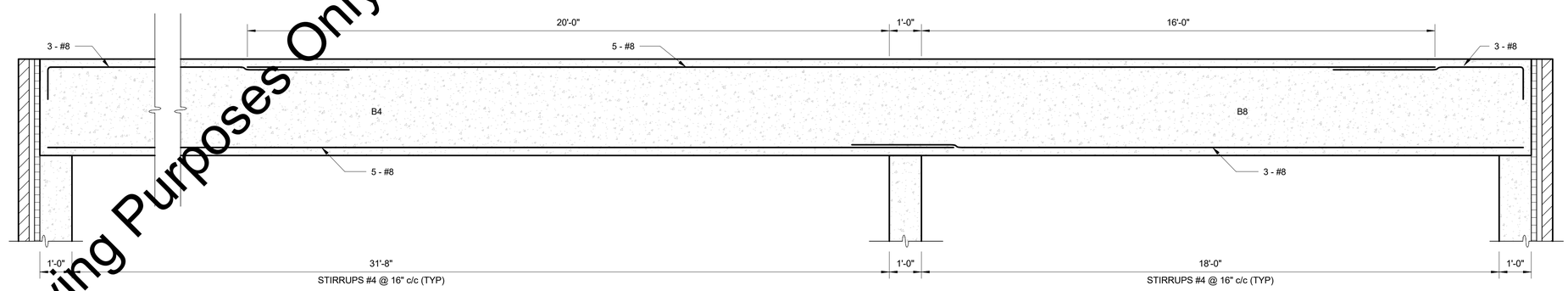

SECTION
BEAM B4 & B8 — P / 13S2

0 1 2 4 FT 1/2"=1'-0"

FOR STRUCTURAL GENERAL NOTES SEE 1S1
FOR STANDARD DETAILS SEE AREA 16S SHEETS

"For Viewing Purposes Only - Visit wesslerengineering.com to Purchase"

SCALE VERIFICATION	DRAWN BY	JL
BAR IS ONE INCH LONG ON ORIGINAL DRAWING	CHECKED BY	JRB
	APPROVED BY	JRB
	ISSUE DATE	MARCH 2020
	PROJECT NUMBER	193216-04-001

NO.	DATE	INITIALS	REVISION DESCRIPTION

JEFFREY ROSS BALLARD REGISTERED No. 60860191 STATE OF INDIANA PROFESSIONAL ENGINEER 3/4/2020

WESSLER ENGINEERING
More than a Project™

WASTEWATER SYSTEM EXPANSION
CITY OF FRANKFORT, INDIANA
CONTRACT A - WASTEWATER TREATMENT PLANT

NEW THICKENING AND DEWATERING BUILDING
STRUCTURAL SECTIONS

SHEET NO. **13S5**

Plotted: 2/26/2020 2:09:17 PM C:\users\Jonathan\Documents\193216-New Thickening and Dewatering_CENTRAL - R19_Jonathan_WE.rvt

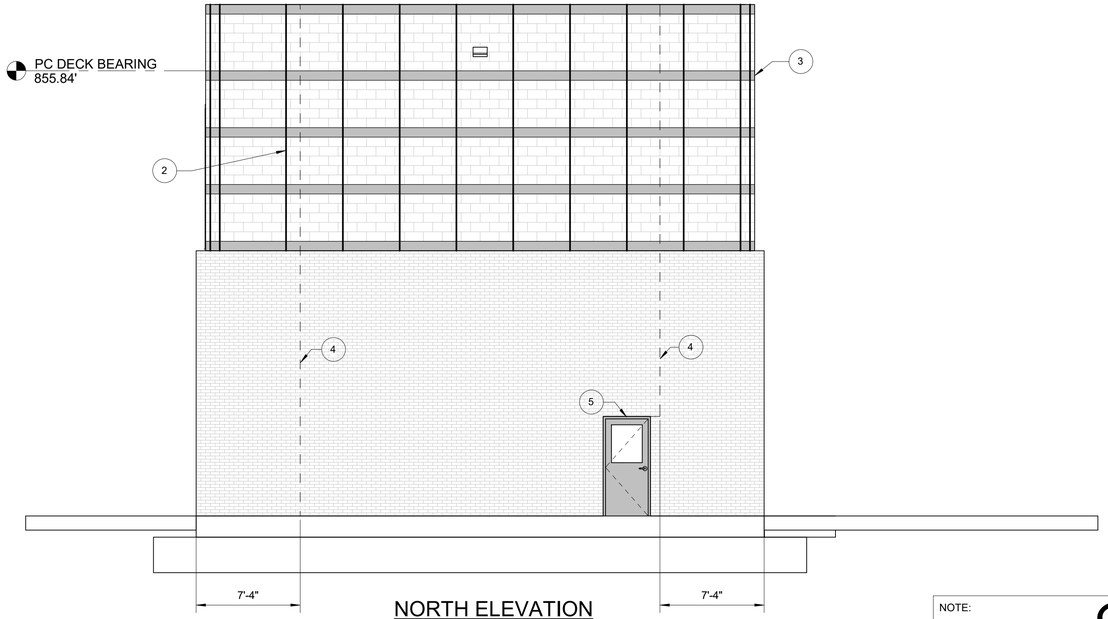

NORTH ELEVATION

0 4 8 12 FT 3/16"=1'-0"

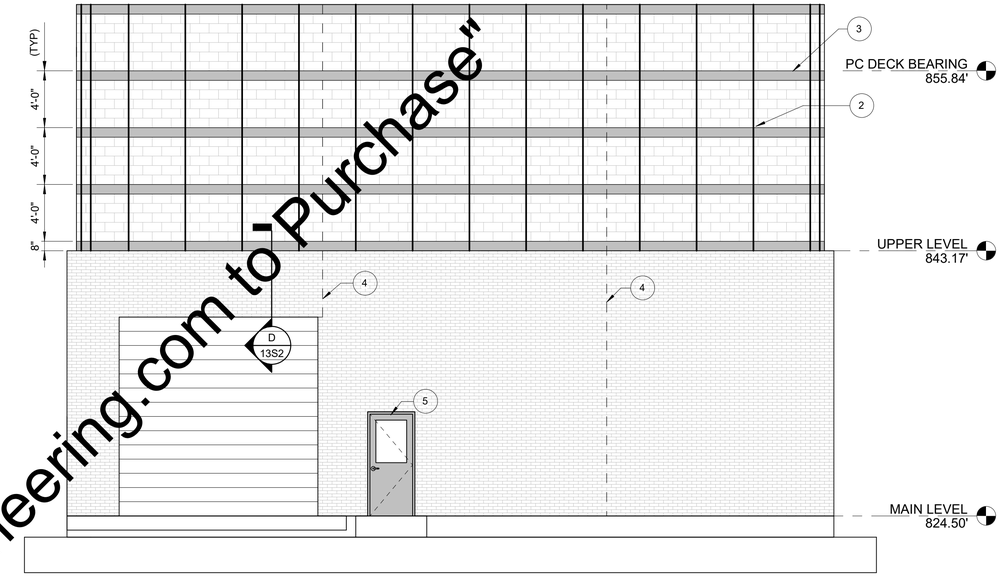

WEST ELEVATION

0 4 8 12 FT 3/16"=1'-0"

NOTE:

STRUCTURAL CMU WALLS DO NOT HAVE CONTROL JOINTS

KEY NOTES

1. LINTEL BEAM W16x40 w/ 3/8" PLATE. SEE DETAIL 8 ON SHEET 13S3.
2. #5 @ 48" c/c, TYP CMU WALL REINFORCING.
3. 8" BONDBEAM, REINF w/ 2 #5 CONTINUOUS.
4. MASONRY VENEER CONTROL JOINT.
5. FOR LINTEL DETAIL SEE SHEET 13S2 SIMILAR.

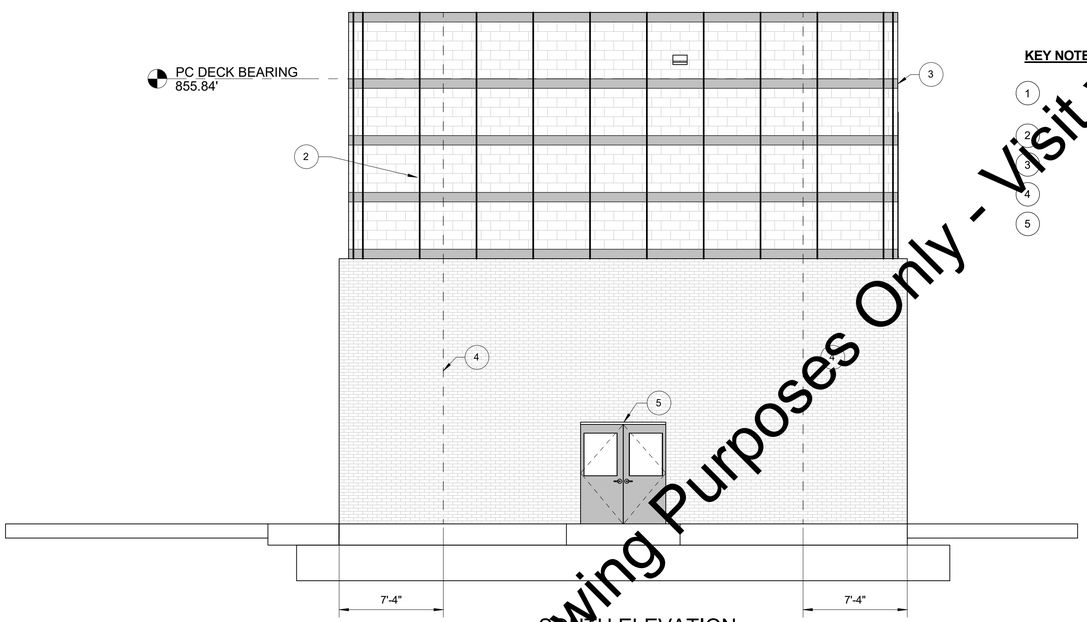

SOUTH ELEVATION

0 4 8 12 FT 3/16"=1'-0"

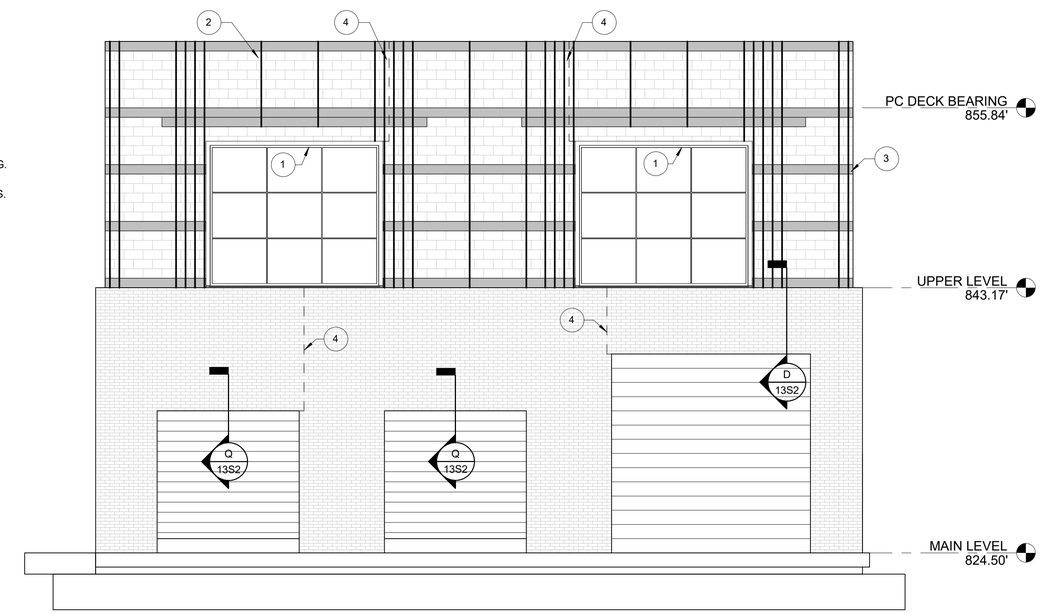

EAST ELEVATION

0 4 8 12 FT 3/16"=1'-0"

FOR STRUCTURAL GENERAL NOTES SEE 1S1
FOR STANDARD DETAILS SEE AREA 16S SHEETS

SCALE VERIFICATION	DRAWN BY	JL
BAR IS ONE INCH LONG ON ORIGINAL DRAWING	CHECKED BY	JRB
	APPROVED BY	JRB
	ISSUE DATE	MARCH 2020
	PROJECT NUMBER	193216-04-001

NO.	DATE	INITIALS	REVISION DESCRIPTION

JEFFREY ROSS BALLARD
REGISTERED
No. 60860191
STATE OF INDIANA
PROFESSIONAL ENGINEER
3/4/2020

WESSLER ENGINEERING
More than a Project™

WASTEWATER SYSTEM EXPANSION
CITY OF FRANKFORT, INDIANA
CONTRACT A - WASTEWATER TREATMENT PLANT

NEW THICKENING AND DEWATERING BUILDING
STRUCTURAL ELEVATIONS

SHEET NO. **13S6**

PAGE NO. 160

"For Viewing Purposes Only - Visit wesslerengineering.com to Purchase"

Plotted: 2/26/2020 2:09:18 PM C:\users\JonathanL\Documents\193216-New Thickening and Dewatering_CENTRAL - R19_JonathanL_WE.rvt

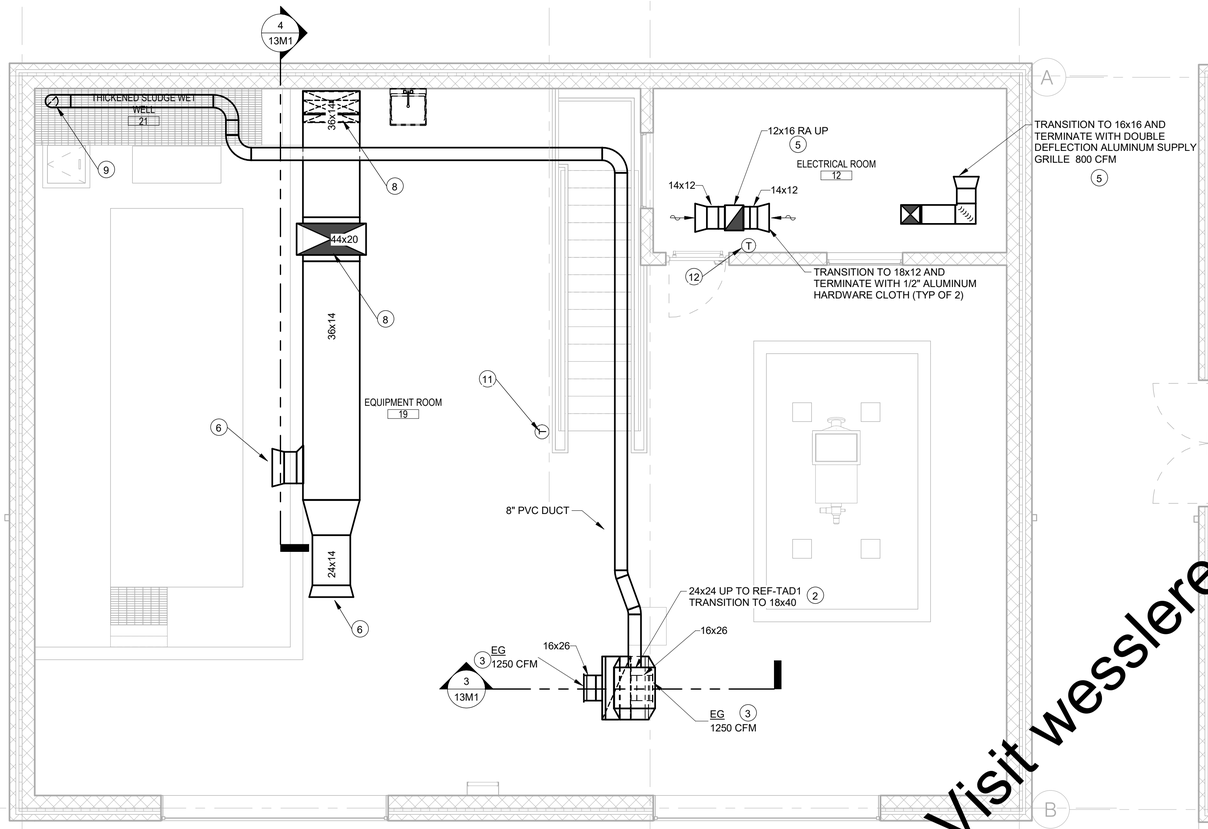

UPPER LEVEL MECHANICAL PLAN

Scale: 1/4" = 1'-0"

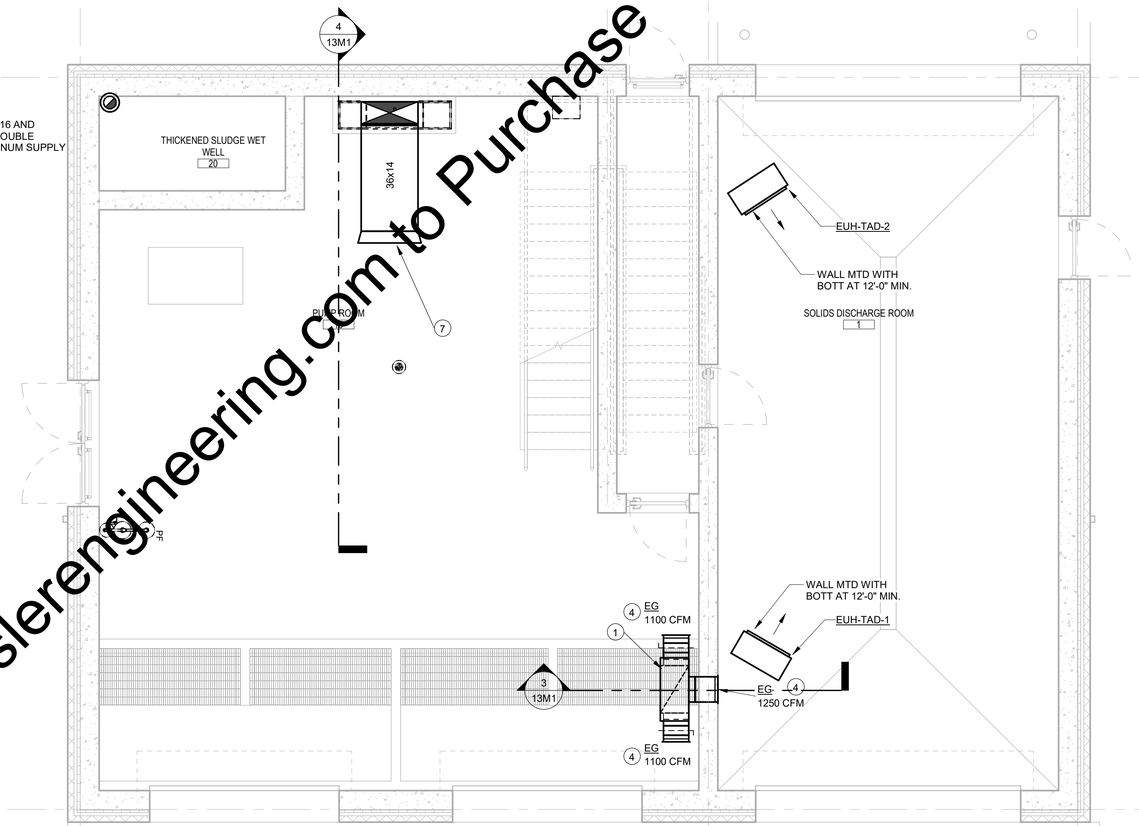

LOWER LEVEL MECHANICAL PLAN

Scale: 1/4" = 1'-0"

GENERAL NOTES:

1. REFER TO DRAWING 1M1 FOR ADDITIONAL GENERAL NOTES.
2. RIGID AND FLEXIBLE DUCTWORK FABRICATION SHALL CONFORM TO THE LATEST EDITION OF SMACNA "HVAC DUCT CONSTRUCTION STANDARDS".
3. DUCTWORK SHALL BE CONSTRUCTED TO THE FOLLOWING PRESSURES:
   a. SUPPLY: PRESSURE 0-4"WC, LEAK CLASS A, VELOCITY <2000 FPM
   b. RETURN AND EXHAUST: PRESSURE -1 TO +1" WC, LEAK CLASS C, VELOCITY <2000 FPM
4. INSULATE ALL SUPPLY AIR DUCTWORK WITH 1 1/2" RIGID FIBERGLASS WITH FSK JACKET. SEAL ALL JOINTS, SEAMS, AND ENDS. PREPARE FOR PAINTING AND PAINT WITH EPOXY PAINT WITH COLOR SELECTED BY ARCHITECT.
5. NEW AIR SYSTEMS WITHIN PROJECT AREA TO BE TESTED, ADJUSTED, AND BALANCED BY LICENSED TAB AGENCY.
6. PROVIDE BALANCING DEVICES IN ALL BRANCH DUCTWORK OF SYSTEMS WITH MORE THAN ONE OUTLET/INLET.
7. ALL DUCTWORK, PLENUMS, UNIT CASING STRUCTURE TO BE 316 STAINLESS CONSTRUCTION WITH 316 STAINLESS HARDWARE. ALL COILS, FANS, AND OPERATING SURFACES EXPOSED TO AIRSTREAM OR ENVORONMENT (INCLUDING CONDENSER COILS AND FANS) TO BE COATED WITH HERESITE OR PRIOR APPROVED EQUIVALENT COATING WITH DIRECT TESTING IN AMMONIA AND HYDROGEN SULFIDE ENVIRONMENTS. ALL DUCT ACCESSORIES, HARDWARE AND SUPPORTS TO BE CONSTRUCTED AS LISTED ABOVE OR SHALL BE PRIMED AND PAINTED WITH MIN. TWO COATS ZINK RICH EPOXY COATING.
8. COORDINATE ALL EQUIPMENT AND DUCTWORK WITH FINAL EQUIPMENT LAYOUTS TO MAINTAIN ACCESS AND SERVICE CLEARANCE.

(#) PLAN NOTES:

1. SUPPORT DUCTWORK FROM WALL. SUPPORTS TO BE PRIMED AND PAINTED WITH ZINC RICH EPOXY PAINT.
2. SUPPORT DUCTWORK FROM FLOOR. SUPPORTS TO BE PRIMED AND PAINTED WITH ZINC RICH EPOXY PAINT.
3. GRILLES MOUNTED WITH BOTTOM AT 1' 6" ABOVE UPPER LEVEL FINISHED FLOOR.
4. GRILLES MOUNTED WITH BOTTOM AT 2' 6" ABOVE MAIN LEVEL FINISHED FLOOR.
5. BOTTOM OF DUCT AT 10' 10" ABOVE FINISHED FLOOR.
6. TRANSITION TO 24x16 AND TERMINATE WITH TYPE "SG" SUPPLY GRILLE.
7. TRANSITION TO 40x16 AND TERMINATE WITH TYPE "SG" SUPPLY GRILLE.
8. COORDINATE PENETRATIONS WITH STRUCTURAL DRAWINGS FOR EXACT LOCATION. OPENINGS TO BE CENTERED ON JOINT LINE BETWEEN TWO PANELS.
9. 8" PVC DUCT DOWN INTO WET WELL - TRANSITION TO 12"DIA AND TERMINATE WITH 316 STAINLESS WIRE MESH GRILLE AT 3' 0" ABOVE PROJECTED FILL LINE. MODIFY GRATING FOR DUCT PENETRATION.
10. EQUIPMENT TO BE MOUNTED ON 18" FULL PERIMETER ROOF CURB FLASHED AND COUNTER FLASHED TO ROOF DECK. COORDINATE WITH ROOFING CONTRACTOR FOR FLASHING DETAILS. SECURE UNIT PER MANUFACTURER'S RECOMMENDATIONS AND PROVIDE WIND CLIPS.
11. EXPLOSION PROOF THERMOSTAT PROVIDED WITH AHU-TAD-1.
12. THERMOSTAT PROVIDED WITH AHU-TAD-2

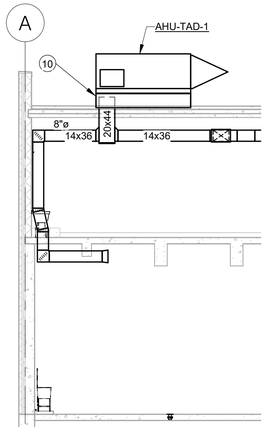

SECTION LOOKING EAST

Scale: 1/8" = 1'-0"

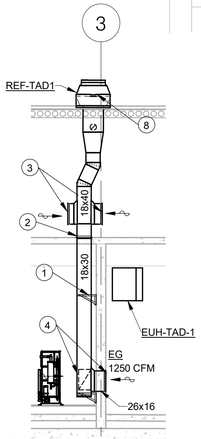

SECTION LOOKING NORTH

Scale: 1/8" = 1'-0"

"For Viewing Purposes Only - Visit wesslerengineering.com to Purchase"

Applied Engineering Services
5975 Castle Creek Parkway N Drive, Suite 300 • Indianapolis, Indiana 46250
Tel: 317.810.4141 • Fax: 317.810.4140 • www.applied-e-s.com

ORIGINAL SHEET SIZE IS 22"x34" (ANSI D) 2/28/2020 1:59:01 PM AESI Proj. No: 19-141

0 1/2" 1" 2"

SCALE VERIFICATION	DRAWN BY	DTM
BAR IS ONE INCH LONG ON ORIGINAL DRAWING	CHECKED BY	DTM
	APPROVED BY	DTM
	ISSUE DATE	MARCH 2020
	PROJECT NUMBER	193216-04-001

NO.	DATE	INITIALS	REVISION DESCRIPTION

DANIEL THOMAS MILES REGISTERED No. PE10302029 STATE OF INDIANA PROFESSIONAL ENGINEER 03/04/2020

WESSLER ENGINEERING
More than a Project™

WASTEWATER SYSTEM EXPANSION
CITY OF FRANKFORT, INDIANA
CONTRACT A - WASTEWATER TREATMENT PLANT

THICKENING AND DEWATERING BUILDING MECHANICAL PLANS

SHEET NO. **13M1**

PAGE NO. 161

GENERAL NOTES:

1. REFER TO DRAWING 1M1 FOR ADDITIONAL GENERAL NOTES.
2. NEW AIR SYSTEMS WITHIN PROJECT AREA TO BE TESTED, ADJUSTED, AND BALANCED BY LICENSED TAB AGENCY.

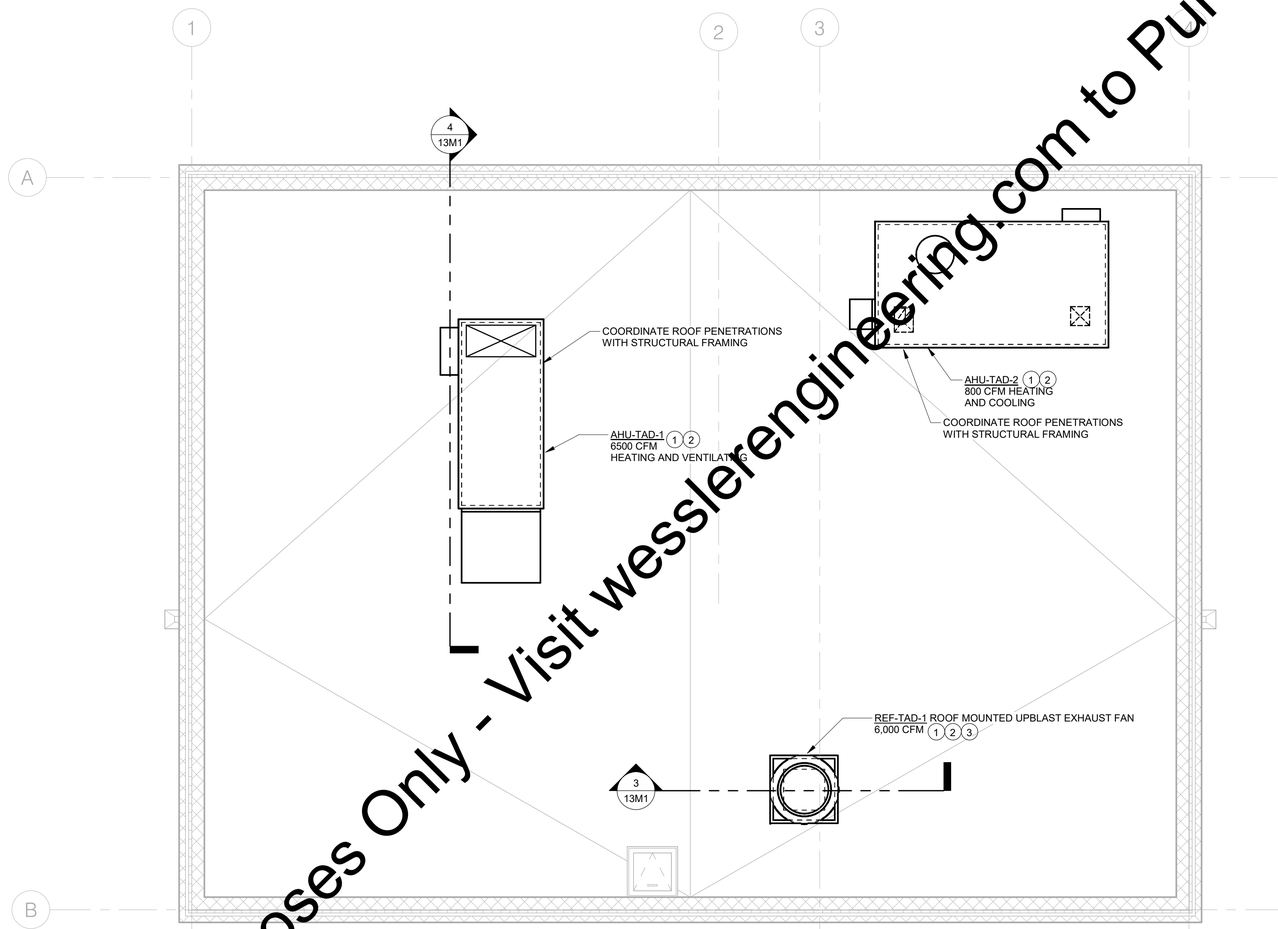

ROOF MECHANICAL PLAN
Scale: 1/4" = 1'-0"

PLAN NOTES:

1. EQUIPMENT MOUNTED ON 18" FULL PERIMETER CURB, FLASHED AND COUNTERFLASHED TO ROOF - COORDIANTE WITH ROOFING CONTRACTOR FOR FLASHING DETAILS.
2. COORDINATE ALL ROOF OPENINGS WITH STRUCTURAL FRAMING. ALL OPENINGS TO BE STRUCTURALLY FRAMED AND SUPPORTED.
3. REFER TO DETAIL 4/13M3 FOR INSTALLTION AND CONSTRUCTION.

"For Viewing Purposes Only - Visit wesslerengineering.com to Purchase"

0 1/2" 1" 2"

ORIGINAL SHEET SIZE IS 22"x34" (ANSI D)
2/28/2020 1:59:07 PM AESI Proj. No: 19-141

Applied Engineering Services
5975 Castle Creek Parkway N Drive, Suite 300 • Indianapolis, Indiana 46250
Tel: 317.810.4141 • Fax: 317.810.4140 • www.applied-e-s.com

SCALE VERIFICATION
BAR IS ONE INCH LONG ON ORIGINAL DRAWING

DRAWN BY	DTM
CHECKED BY	DTM
APPROVED BY	DTM
ISSUE DATE	MARCH 2020
PROJECT NUMBER	193216-04-001

NO.	DATE	INITIALS	REVISION DESCRIPTION

DANIEL THOMAS MILES
REGISTERED
No. PE10302029
STATE OF INDIANA
PROFESSIONAL ENGINEER
03/04/2020

WESSLER ENGINEERING
More than a Project™

WASTEWATER SYSTEM EXPANSION
CITY OF FRANKFORT, INDIANA
CONTRACT A - WASTEWATER TREATMENT PLANT

THICKENING AND DEWATERING BUILDING MECHANICAL PLANS

SHEET NO. **13M2**

PAGE NO. 162

PACKAGED ROOFTOP UNIT SCHEDULE

TAG NO.	AREA SERVED	TYPE	DX COOLING COIL											ELEC HEAT SECTION					FAN										COMPRESSOR/CONDENSER							FILTERS		ELECTRICAL DATA							
			CFM	OA CFM	TOTAL MBH	SEN. MBH	EADB	EAWB	LADB	LAWB	REFRIG. TYPE	SUCT. TEMP.	MAX FACE VEL.	MBH	KW	TEMP RISE	VOLTS/PH	MIN STEPS	FAN TYPE	DRIVE	NO. OF FANS	TOTAL SP	EXTERNAL SP	FAN RPM	WHEEL DIA.	MOTOR HP	MOTOR RPM	VOLT/PH	MIN. NO OF COMP	COMPRESSOR TYPE	MIN. STEPS OF UNLOADING	NO OF CONDENSER FANS	FAN TYPE	FAN HP EACH	DESIGN AMBIENT TEMP	NO.	SIZE	MCA	MOP	EM POWER	CONTROL TYPE	MFG.	MODEL #	WGT. LBS.	REMARKS
AHU-TAD-1	THICKENING AND DEWATERING	PACKAGED RTU HEATING/VENT	6500	NO COOLING										703	206.0	100	460/3	SCR	PLENUM	DIRECT	1	2.54	1.5	1760	20	5.0	1800	460/3	NO COOLNG							4	PLEATED MERV 8	24x24	331.6	350		INTEGRAL	INNOVENT	CAHU-6500	2800	2,4,5
AHU-TAD-2	THICKENING AND DEWATERING ELEC	PACKAGED RTU HEATING/COOLING	800	160	29.3	20.6	79.5	66.5	56	55	410A	44.6	460	1635	224	100	460/3	SCR	PLENUM	DIRECT	1	4..0	2.5	3440	10	1.5	3600	460/3	1	SCROLL	MOD	1	RADIAL	1.0	95	4	PLEATED MERV 8	16x20	131.9	150		INTEGRAL	INNOVENT	CAHU-800	3200	1,3,4,6

NOTES:
1. 316 STAINLESS STEEL CONSTRUCTION INCLUDING HARDWARE, SUPPORTS, ACCESSORIES, ETC. 2" DOUBLE WALL INSULATED CABINET INCLUDING FLOOR AND ROOF, WELDED 316 STAINLESS STEEL STRUCTURAL BASE, FANS AND COIIS INCLUDING CONDENSER TO HAVE BAKED EPOXY CORROSION RESISTANT COATING.
2. 316 STAINLESS STEEL CONSTRUCTION INCLUDING HARDWARE, SUPPORTS, ACCESSORIES, ETC. 2" DOUBLE WALL INSULATED CABINET INCLUDING FLOOR AND ROOF, WELDED 316 STAINLESS STEEL STRUCTURAL BASE, FANS AND COIIS TO HAVE BAKED EPOXY CORROSION RESISTANT COATING.
3. PROVIDE RETURN AND OUTSIDE AIR CONTROL DAMPERS IN UNIT.
4. PROVIDE UNIT MOUNTED VFD WITH UNIT. FAN MOTORS TO HAVE GROUNDING RINGS.
5. PROVIDE SELF CONTAINED CONTROLLER WITH SEQUENCES FOR CONTINUOUS FAN OPERATION AND HEATING BASED ON SPACE MOUNTED EXPLOSION PROOF THERMOSTAT.
6. PROVIDE SELF CONTAINED CONTROLLER WITH SEQUENCES FOR CONTINUOUS FAN OPERATION, COOLING, HEATING, AND DEHUMIDIFICATION BASED ON SPACE MOUNTED THERMOSTAT AND UNIT MOUNTED HUMIDISTAT. CONTROL FOR DISCHARGE HUMIDITY BELOW 60% R.H.

RETURN AND EXHAUST GRILLE SCHEDULE

TAG NO.	NOMINAL FACE SIZE (IN.)	MIN. CORE AREA (SQ. FT.)	BRANCH DUCT SIZE TO GRILLE (IN.)	CFM RANGE	MAX. NC LEVEL	MAX. CORE VELOCITY (FPM)	MAX. VELOCITY PRESSURE (IN. W.C.)	MAX. TOTAL PRESSURE (IN. W. C.)	MFR.	MODEL NO.	REMARKS
SG	20X20	2.57	PER PLANS	1000-1200	18	500	0.016	0.04	TITUS	301FL	1,2
EG	20X20	2.57	PER PLANS	1000-1500	15	500	0.016	0.040	TITUS	350ZFL	2

NOTES:
1. DUAL DEFLECTION 3/4" BLADE SPACING.
2. 316 STAINLESS CONSTRUCTION AND HARDWARE.

EXHAUST FANS

TAG NO.	AREA SERVED	FAN					SOUND POWER LEVELS (IN OCTAVE BAND)									MOTOR				DISCONNECT			CONTROL	WEIGHT	BASIS OF DESIGN		NOTES
		FAN TYPE	CFM	STATIC PRESSURE (IN. W. C.)	SPEED (RPM)	DRIVE	1	2	3	4	5	6	7	8	SOUND LEVEL (LWA) INLET	HP	VOLTS	PHASE	EM POWER	TYPE	PROVIDED BY	LOCATION			MFG.	MODEL #	
REF-TAD1	GENERAL	ROOF UPBLAST	6000	1	665	BELT	89	81	[illegible]	[illegible]	74	69	65	64	79	2	460	3			DIV 23	ON FAN	CONT	250	LOREN COOK	300FCRUB	1,2,3

NOTES:
1. FAN TO RUN CONTINUOUSLY
2. FAN ASSEMBLY TO BE NON SPARKING FRP CONSTRUCTION INCLUDING BACKDRAFT DAMPER. PROVIDE WITH EXPLOSION PROOF RATED MOTOR FOR CLASS 1/DIV 1 AREA INCLUDING CONTACTORS, AND CONTROLLERS.
3. FAN CONSTRUCTION TO BE FRP WITH 316 STAINLESS SHAFT AND HARDWARE. FINISH TO BE CORROSION RESISTANT POLYESTER COATING.

ELECTRICAL CABINET AND UNIT HEATER SCHEDULE

TAG NO.	LOCATION	TYPE	CFM	EAT (F)	HEATING ELEMENT		MOTOR				ELECTRICAL DATA					BASIS OF DESIGN		WGT.	NOTES
					KW	VOLT/PH	MOTOR HP	NO. OF SPEEDS	RPM	VOLT/PH	WSA	STARTER BY	STARTER TYPE	EM POWER	CONTROL TYPE	MFG.	MODEL #		
EUH-TAD-1	SOLIDS DISCHARGE ROOM	HORIZ	1200	50	15	480/3	1	1	1750	480/3	18.6	MFGR	ATL		UNIT MTD	HAZLOC	XEU1-16	180	1,2,3,4
EUH-TAD-2	SOLIDS DISCHARGE ROOM	HORIZ	1200	50	15	480/3	1	1	1750	480/3	18.6	MFGR	ATL		UNIT MTD	HAZLOC	XEU1-16	180	1,2,3,4

NOTES:
1. PROVIDE UNIT MOUNTED STAND ALONE EXPLOSION PROOF THERMOSTAT AND DISCONNECT.
2. HERESITE COATED COIL, AND CABINET.
3. PROVIDE ALL HARDWARE FOR WALL MOUNTING.
4. ALL ELECTRICAL COMPONENTS IN HEATER SHALL BE EXPLOSION PROOF CL1/DIV.1.

Control Type:

DDC Direct Digital Control
HOA Hand Off Automatic
IC Integral Controls
IL Interlock with other equipment
PB Push Button
RC Runs Continuously
TC Time Clock

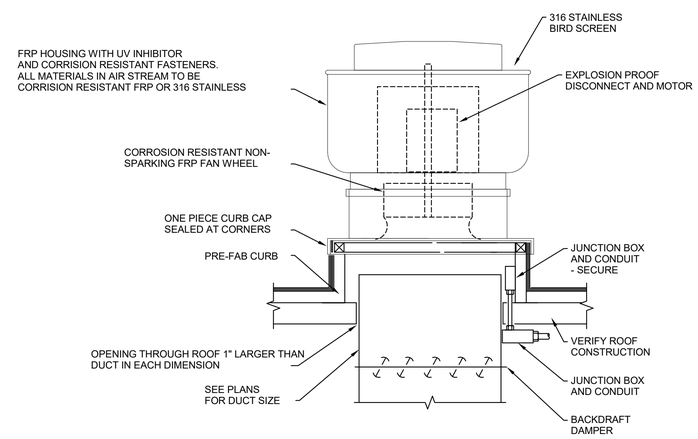

4 **ROOF EXHAUST FAN DETAIL**
Scale: 12" = 1'-0"

"For Viewing Purposes Only - Visit wesslerengineering.com to Purchase"

ORIGINAL SHEET SIZE IS 22"x34" (ANSI D) 2/28/2020 1:59:12 PM AESI Proj. No: 19-141

0 1/2" 1" 2"

Applied Engineering Services
5975 Castle Creek Parkway N Drive, Suite 300 • Indianapolis, Indiana 46250
Tel: 317.810.4141 • Fax: 317.810.4140 • www.applied-e-s.com

SCALE VERIFICATION
BAR IS ONE INCH LONG ON ORIGINAL DRAWING

DRAWN BY	DBM
CHECKED BY	DTM
APPROVED BY	DTM
ISSUE DATE	MARCH 2020
PROJECT NUMBER	193216-04-001

NO.	DATE	INITIALS	REVISION DESCRIPTION

DANIEL THOMAS MILES REGISTERED No. PE10302029 STATE OF INDIANA PROFESSIONAL ENGINEER 03/04/2020

WESSLER ENGINEERING
More than a Project™

WASTEWATER SYSTEM EXPANSION
CITY OF FRANKFORT, INDIANA
CONTRACT A - WASTEWATER TREATMENT PLANT

THICKENING AND DEWATERING BUILDING MECHANICAL DETAILS AND SCHEDULES

SHEET NO. **13M3**

PAGE NO. 163

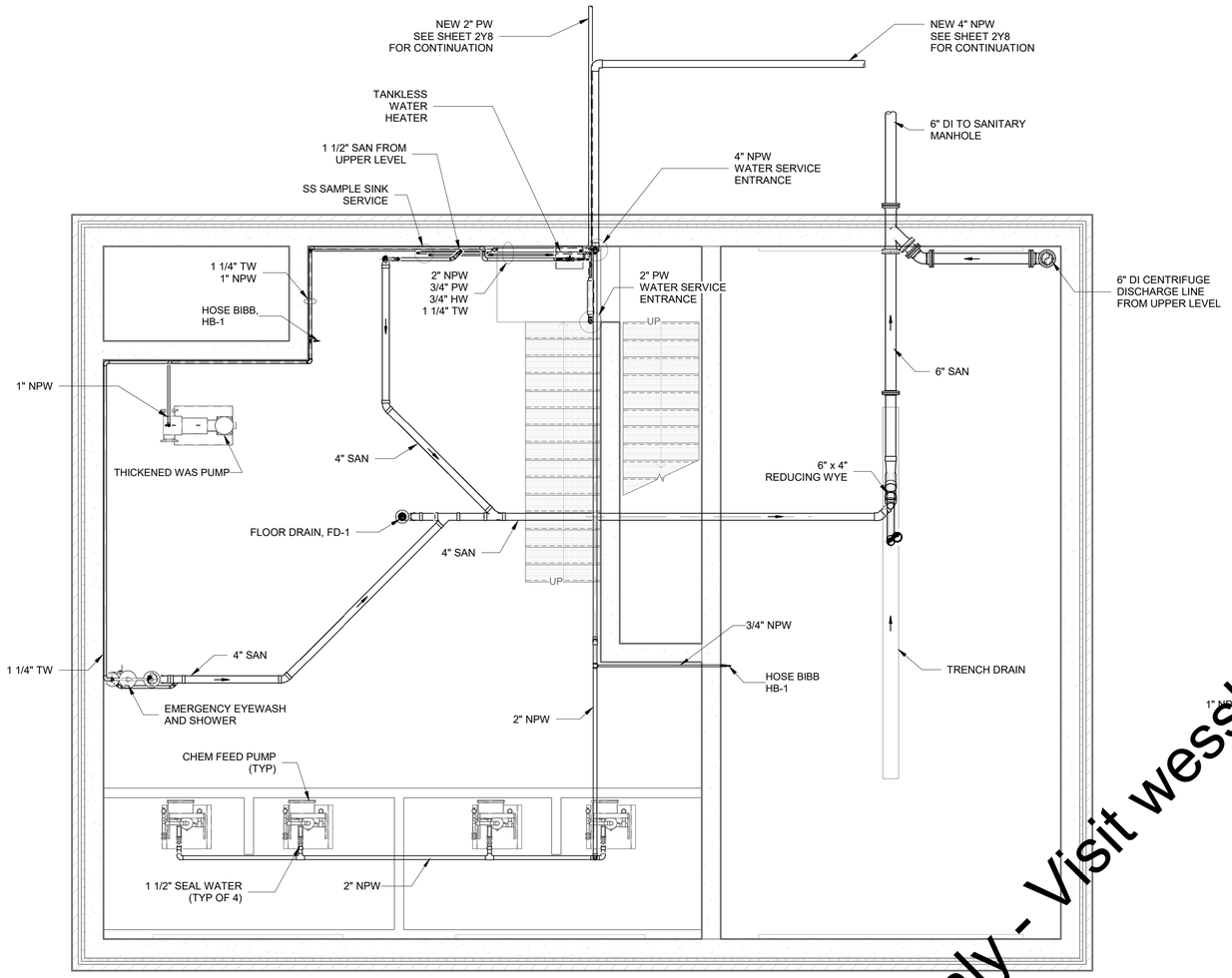

LOWER LEVEL PLUMBING PLAN

0 2 4 8 FT
1/4"=1'-0"

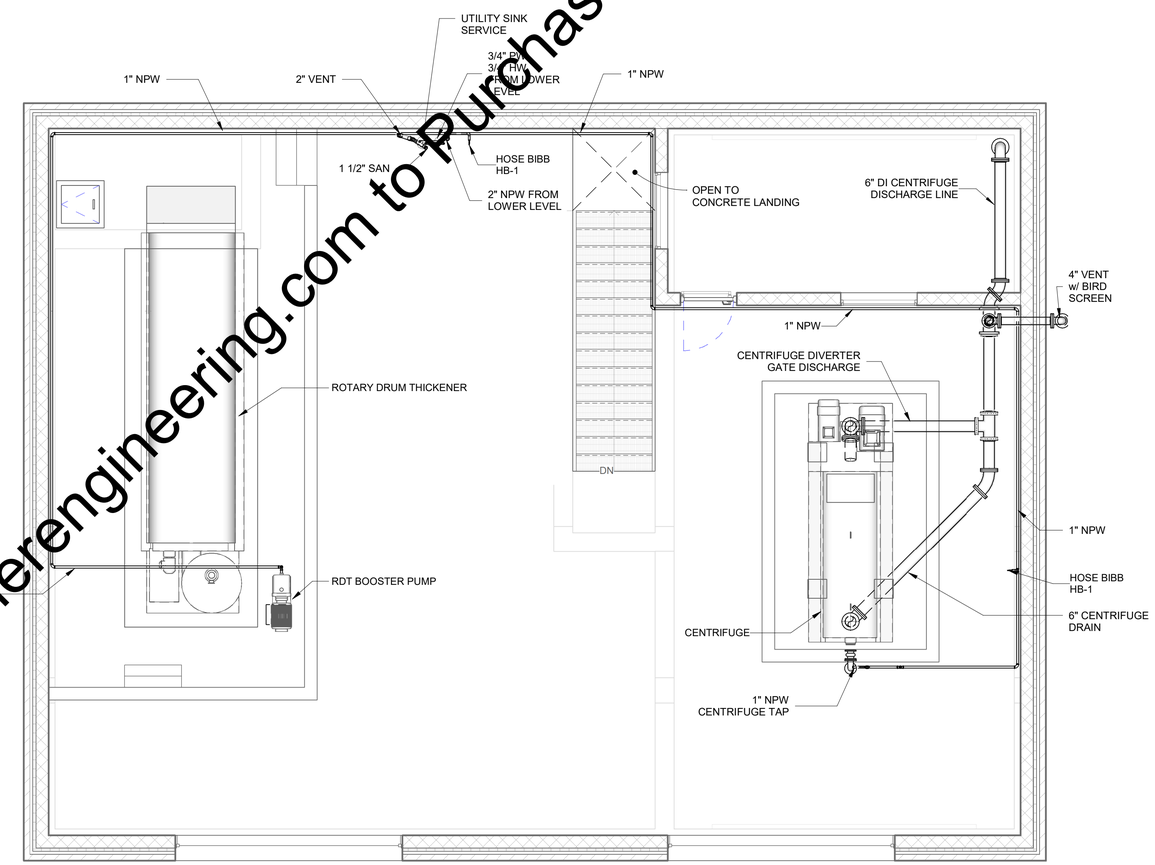

UPPER LEVEL PLUMBING PLAN

0 2 4 8 FT
1/4"=1'-0"

NOTE:

FLOOR DRAIN, FD-1: DUCO CAST IRON BODY WITH FLASHING COLLAR, ADJUSTABLE ROUND 12" NICKEL BRONZE TOP AND 4" BOTTOM OUTLET AS MANUFACTURED BY J.R. SMITH, MODEL 2140, OR APPROVED EQUAL. PROVIDE TRAP IN SANITARY LINE.

HOSE BIBB, HB-1: 3/4" NPT INLET, 3/4" MALE HOSE NOZZLE, CHROME PLATED SOLID BRASS, WALL MOUNTED WITH ATMOSPHERIC VACUUM BREAKER.

LEGEND

PW	POTABLE WATER
NPW	NON-POTABLE WATER
CW	COLD WATER
HW	HOT WATER
TW	TEPID WATER
SAN	SANITARY LINE
→	FLOW DIRECTION

"For Viewing Purposes Only - Visit wesslerengineering.com to Purchase"

SCALE VERIFICATION	DRAWN BY	JL
BAR IS ONE INCH LONG ON ORIGINAL DRAWING	CHECKED BY	CALT
	APPROVED BY	RWH
	ISSUE DATE	MARCH 2020
	PROJECT NUMBER	193216-04-001

NO.	DATE	INITIALS	REVISION DESCRIPTION

ROBERT W. HOLDEN II REGISTERED No. 10000096 STATE OF INDIANA PROFESSIONAL ENGINEER 3/4/2020

WESSLER ENGINEERING
More than a Project™

WASTEWATER SYSTEM EXPANSION
CITY OF FRANKFORT, INDIANA
CONTRACT A - WASTEWATER TREATMENT PLANT

NEW THICKENING AND DEWATERING BUILDING
PLUMBING PLAN

SHEET NO. **13P1**
PAGE NO. 164

Plotted: 2/26/2020 2:09:08 PM C:\users\JonathanL\Documents\193216-New Thickening and Dewatering_CENTRAL - R19_JonathanL_WE.rvt

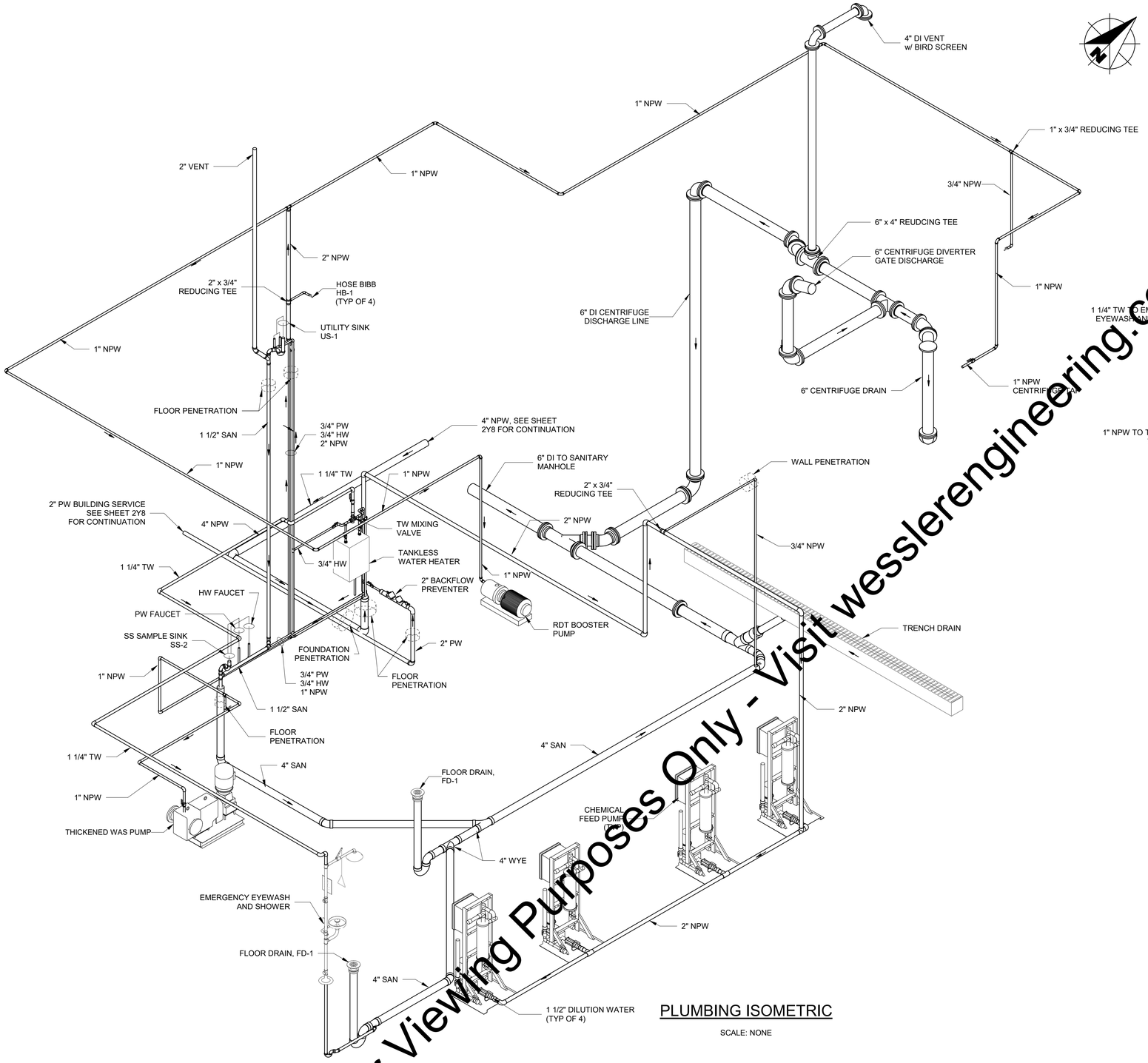

PLUMBING ISOMETRIC

SCALE: NONE

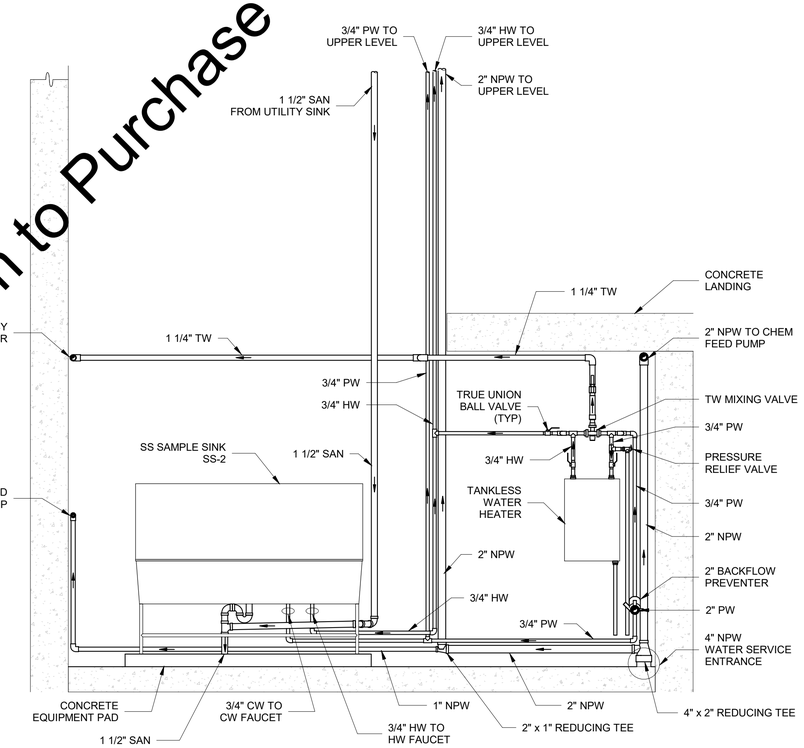

PLUMBING DETAIL ELEVATION

SCALE: NONE

NOTE:

FLOOR DRAIN, FD-1: DUCO CAST IRON BODY WITH FLASHING COLLAR, ADJUSTABLE ROUND 12" NICKEL BRONZE TOP AND 4" BOTTOM OUTLET AS MANUFACTURED BY J.R. SMITH, MODEL 2140, OR APPROVED EQUAL. PROVIDE TRAP IN SANITARY LINE.

HOSE BIBB, HB-1: 3/4" NPT INLET, 3/4" MALE HOSE NOZZLE, CHROME PLATED SOLID BRASS, WALL MOUNTED WITH ATMOSPHERIC VACUUM BREAKER.

LEGEND

PW	POTABLE WATER
NPW	NON-POTABLE WATER
HW	HOT WATER
TW	TEPID WATER
SAN	SANITARY LINE
→	FLOW DIRECTION

"For Viewing Purposes Only - Visit wesslerengineering.com to Purchase"

SCALE VERIFICATION	DRAWN BY	JL
BAR IS ONE INCH LONG ON ORIGINAL DRAWING	CHECKED BY	ALT
	APPROVED BY	RWH
	ISSUE DATE	MARCH 2020
	PROJECT NUMBER	193216-04-001

NO.	DATE	INITIALS	REVISION DESCRIPTION

ROBERT W. HOLDEN, II
REGISTERED
No. 10000096
STATE OF INDIANA
PROFESSIONAL ENGINEER
3/4/2020

WESSLER ENGINEERING
More than a Project™

WASTEWATER SYSTEM EXPANSION
CITY OF FRANKFORT, INDIANA
CONTRACT A - WASTEWATER TREATMENT PLANT

NEW THICKENING AND DEWATERING BUILDING
PLUMBING ISOMETRIC AND DETAILS

SHEET NO. **13P2**

PAGE NO. 165

Plotted: 2/26/2020 2:09:11 PM C:\users\Jonathan\Documents\193216-New Thickening and Dewatering_CENTRAL - R19_Jonathan_L_WE.rvt

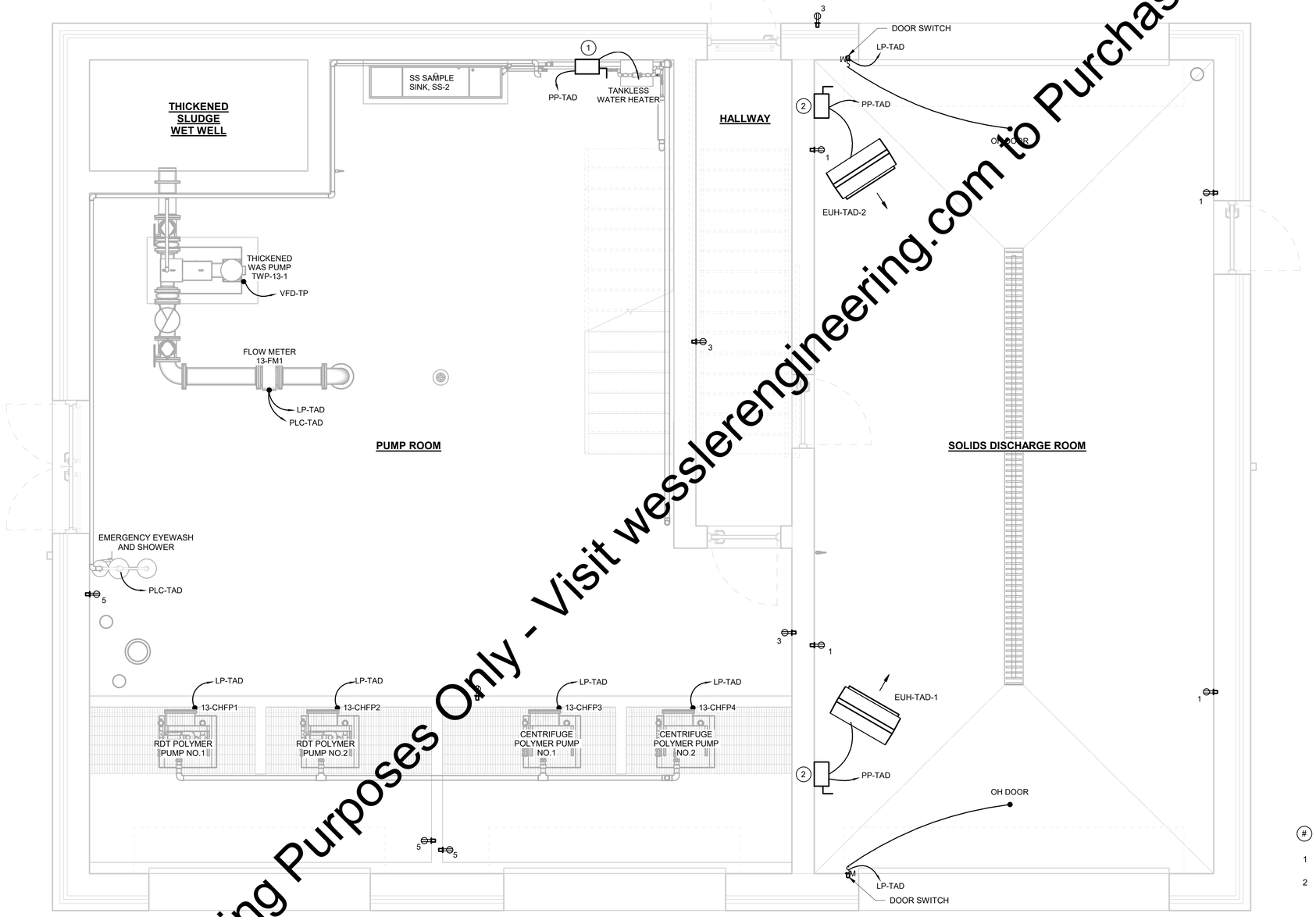

LOWER LEVEL POWER PLAN

0 2 4 6 FT
3/8"=1'-0"

(#) KEYED NOTES - 13E1

1 100A, 480V, 3-POLE, NEMA 4X, SST, NFSS.

2 30A, 480V, 3-POLE, NEMA 4X, SST, NFSS.

"For Viewing Purposes Only - Visit wesslerengineering.com to Purchase"

SCALE VERIFICATION	DRAWN BY	EAS
BAR IS ONE INCH LONG ON ORIGINAL DRAWING	CHECKED BY	WCM
	APPROVED BY	WCM
	ISSUE DATE	MARCH 2020
	PROJECT NUMBER	193216-04-001

NO.	DATE	INITIALS	REVISION DESCRIPTION

WAYNE C. MOORE REGISTERED No. 10707476 STATE OF INDIANA PROFESSIONAL ENGINEER 3/4/2020

WESSLER ENGINEERING
More than a Project™

WASTEWATER SYSTEM EXPANSION
FRANKFORT UTILITIES
FRANKFORT, INDIANA

NEW THICKENING AND DEWATERING BUILDING
LOWER LEVEL POWER PLAN

SHEET NO. **13E1**

PAGE NO. 166

Plotted: 3/5/2020 8:37:45 AM J:\Frankfort\Projects\193216 Frankfort WWTP Exp\CAD 04-0011\Revit\Models\193216-EL-NEW THICKING AND DEWATERING-R19.rvt

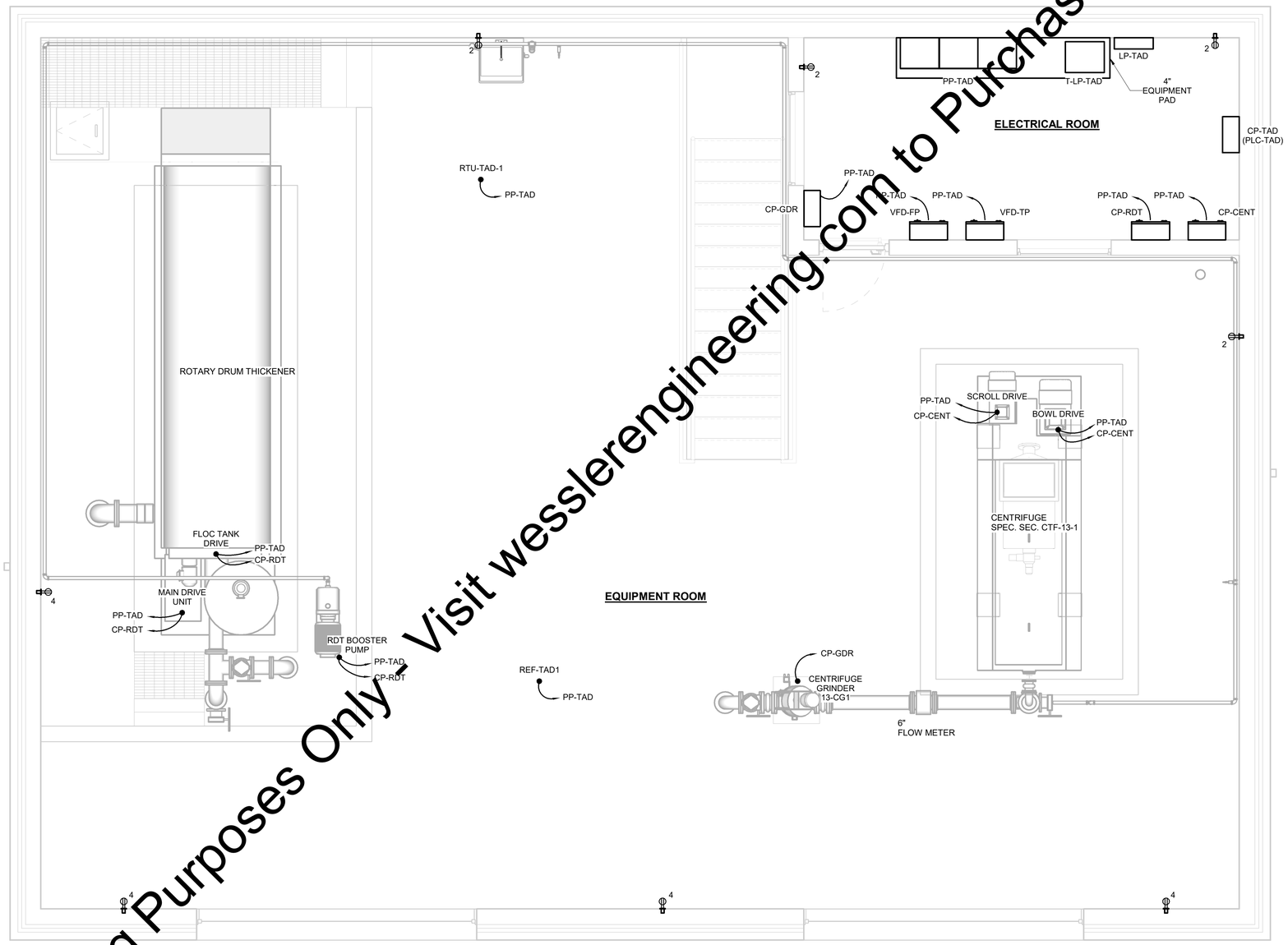

UPPER LEVEL POWER PLAN

0 2 4 6 FT
3/8"=1'-0"

"For Viewing Purposes Only - Visit wesslerengineering.com to Purchase"

SCALE VERIFICATION	DRAWN BY	EAS
BAR IS ONE INCH LONG ON ORIGINAL DRAWING	CHECKED BY	WCM
	APPROVED BY	WCM
	ISSUE DATE	MARCH 2020
	PROJECT NUMBER	193216-04-001

NO.	DATE	INITIALS	REVISION DESCRIPTION

WAYNE C. MOORE REGISTERED No. 10707476 STATE OF INDIANA PROFESSIONAL ENGINEER 3/4/2020

WESSLER ENGINEERING
More than a Project™

WASTEWATER SYSTEM EXPANSION
FRANKFORT UTILITIES
FRANKFORT, INDIANA

NEW THICKENING AND DEWATERING BUILDING
UPPER LEVEL POWER PLAN

SHEET NO. **13E2**

PAGE NO. 167

Plotted: 3/4/2020 2:32:06 PM J:\Frankfort\Projects\193216 Frankfort WWTP Exp\CAD 04-001\Revit\Models\193216-EL-NEW THICKING AND DEWATERING-R19.rvt

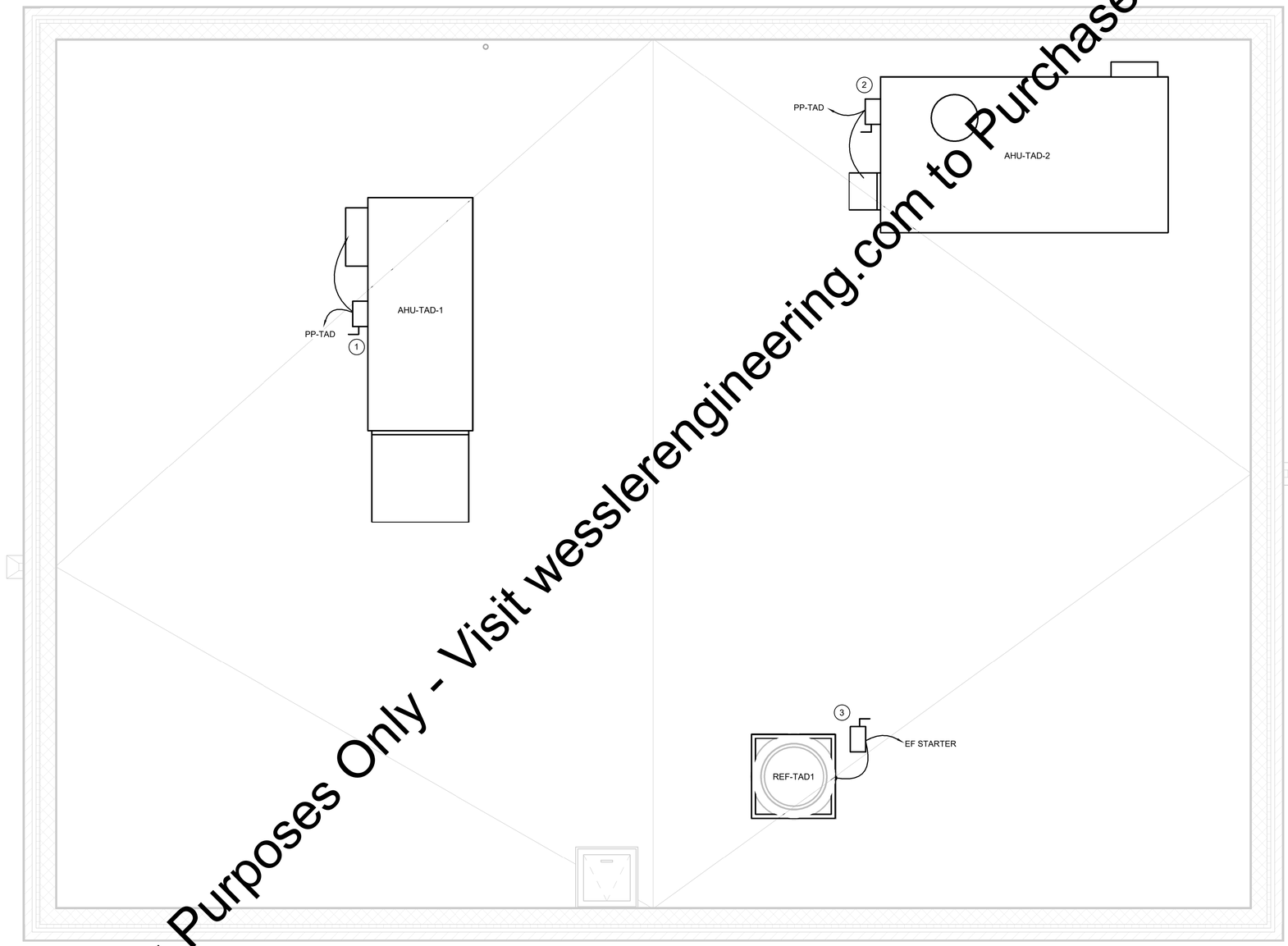

ROOF LEVEL POWER PLAN

0 2 4 6 FT
3/8"=1'-0"

(#) KEYED NOTES - 13E3

1 400A, 480V, 3-POLE, NEMA 4X, SST, NFSS.

2 200A, 480V, 3-POLE, NEMA 4X, SST, NFSS.

3 30A, 480V, 3-POLE, NEMA 4X, SST, NFSS.

"For Viewing Purposes Only - Visit wesslerengineering.com to Purchase"

SCALE VERIFICATION	DRAWN BY	JL
BAR IS ONE INCH LONG ON ORIGINAL DRAWING	CHECKED BY	WCM
	APPROVED BY	WCM
	ISSUE DATE	MARCH 2020
	PROJECT NUMBER	193216-04-001

NO.	DATE	INITIALS	REVISION DESCRIPTION

WAYNE C. MOORE REGISTERED No. 10707476 STATE OF INDIANA PROFESSIONAL ENGINEER 3/4/2020

WESSLER ENGINEERING
More than a Project™

WASTEWATER SYSTEM EXPANSION
FRANKFORT UTILITIES
FRANKFORT, INDIANA

NEW THICKENING AND DEWATERING BUILDING
ROOF LEVEL POWER PLAN

SHEET NO. **13E3**

PAGE NO. 168

Plotted: 3/5/2020 10:03:57 AM J:\Frankfort\Projects\193216 Frankfort WWTP Exp\CAD 04-0011\Revit\Models\193216-EL-NEW THICKING AND DEWATERING-R19.rvt

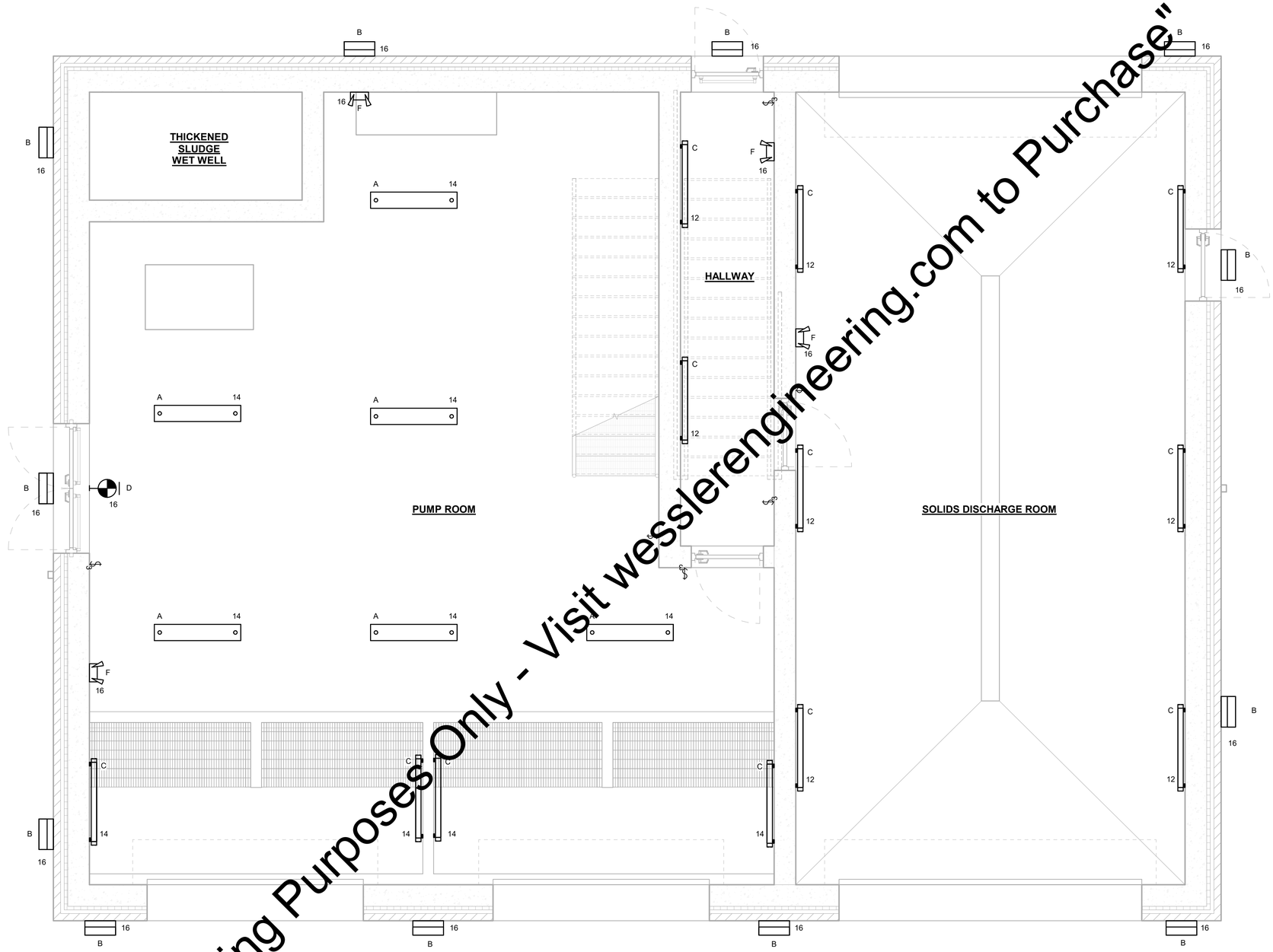

LOWER LEVEL LIGHTING

0 2 4 6 FT
3/8"=1'-0"

"For Viewing Purposes Only - Visit wesslerengineering.com to Purchase"

SCALE VERIFICATION	DRAWN BY	EAS
BAR IS ONE INCH LONG ON ORIGINAL DRAWING	CHECKED BY	WCM
	APPROVED BY	WCM
	ISSUE DATE	MARCH 2020
	PROJECT NUMBER	193216-04-001

NO.	DATE	INITIALS	REVISION DESCRIPTION

WAYNE C. MOORE REGISTERED No. 10707476 STATE OF INDIANA PROFESSIONAL ENGINEER 3/4/2020

WESSLER ENGINEERING
More than a Project™

WASTEWATER SYSTEM EXPANSION
FRANKFORT UTILITIES
FRANKFORT, INDIANA

NEW THICKENING AND DEWATERING BUILDING
LOWER LEVEL LIGHTING PLANS

SHEET NO. **13E4**

PAGE NO. 169

Plotted: 3/4/2020 2:32:08 PM J:\Frankfort\Projects\193216 Frankfort WWTP Exp\CAD 04-0011\Revit\Models\193216-EL-NEW THICKING AND DEWATERING-R19.rvt

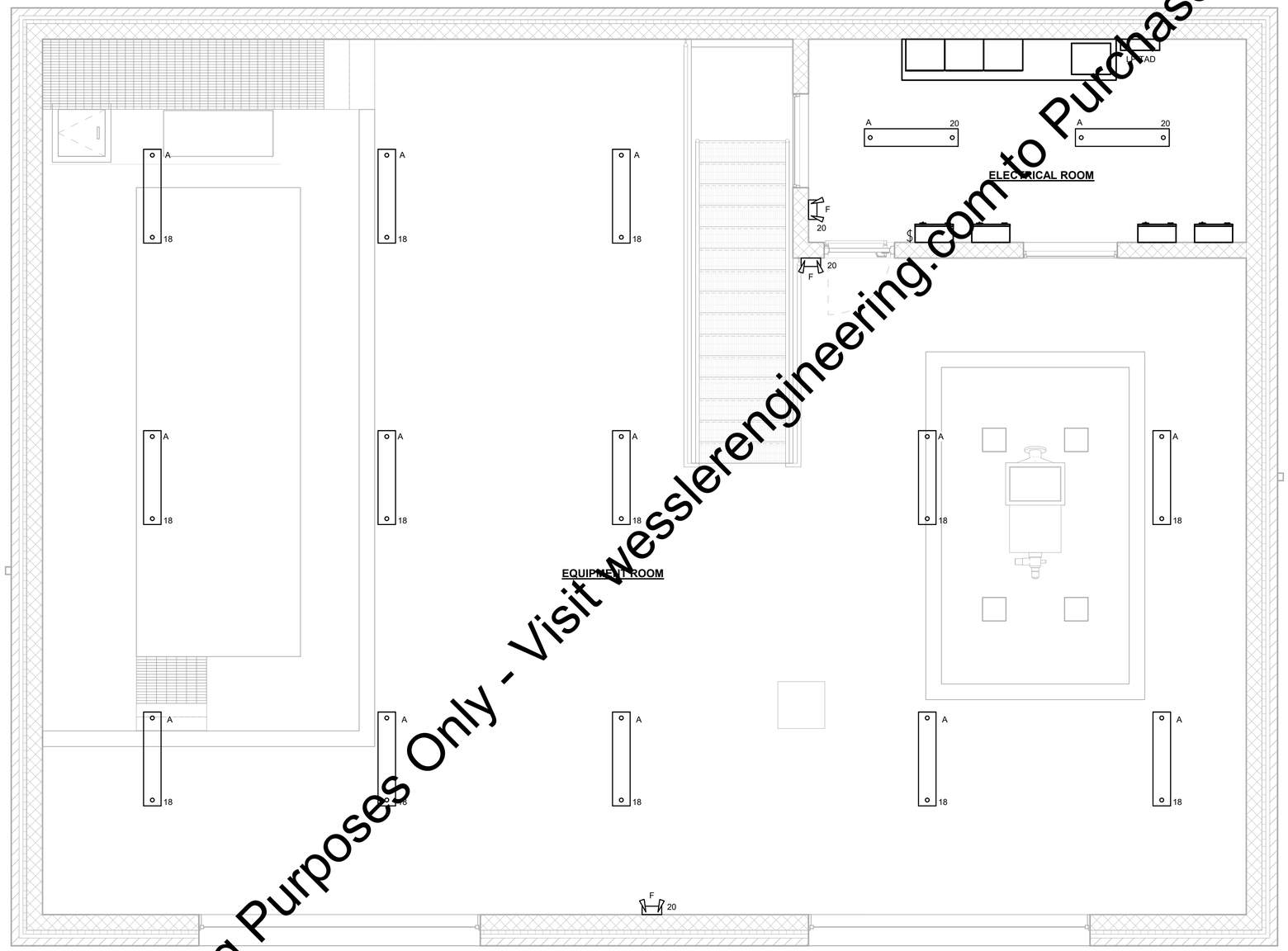

UPPER LEVEL LIGHTING

0 2 4 6 FT
3/8"=1'-0"

"For Viewing Purposes Only - Visit wesslerengineering.com to Purchase"

SCALE VERIFICATION	DRAWN BY	EAS
BAR IS ONE INCH LONG ON ORIGINAL DRAWING	CHECKED BY	WCM
	APPROVED BY	WCM
	ISSUE DATE	MARCH 2020
	PROJECT NUMBER	193216-04-001

NO.	DATE	INITIALS	REVISION DESCRIPTION

WAYNE C. MOORE REGISTERED No. 10707476 STATE OF INDIANA PROFESSIONAL ENGINEER 3/4/2020

WESSLER ENGINEERING
More than a Project™

WASTEWATER SYSTEM EXPANSION
FRANKFORT UTILITIES
FRANKFORT, INDIANA

NEW THICKING AND DEWATERING BUILDING
UPPER LEVEL LIGHTING PLAN

SHEET NO. **13E5**
PAGE NO. 170

Plotted: 3/4/2020 2:32:09 PM J:\Frankfort\Projects\193216 Frankfort WWTP Exp\CAD 04-0011\Revit\Models\193216-EL-NEW THICKING AND DEWATERING-R19.rvt

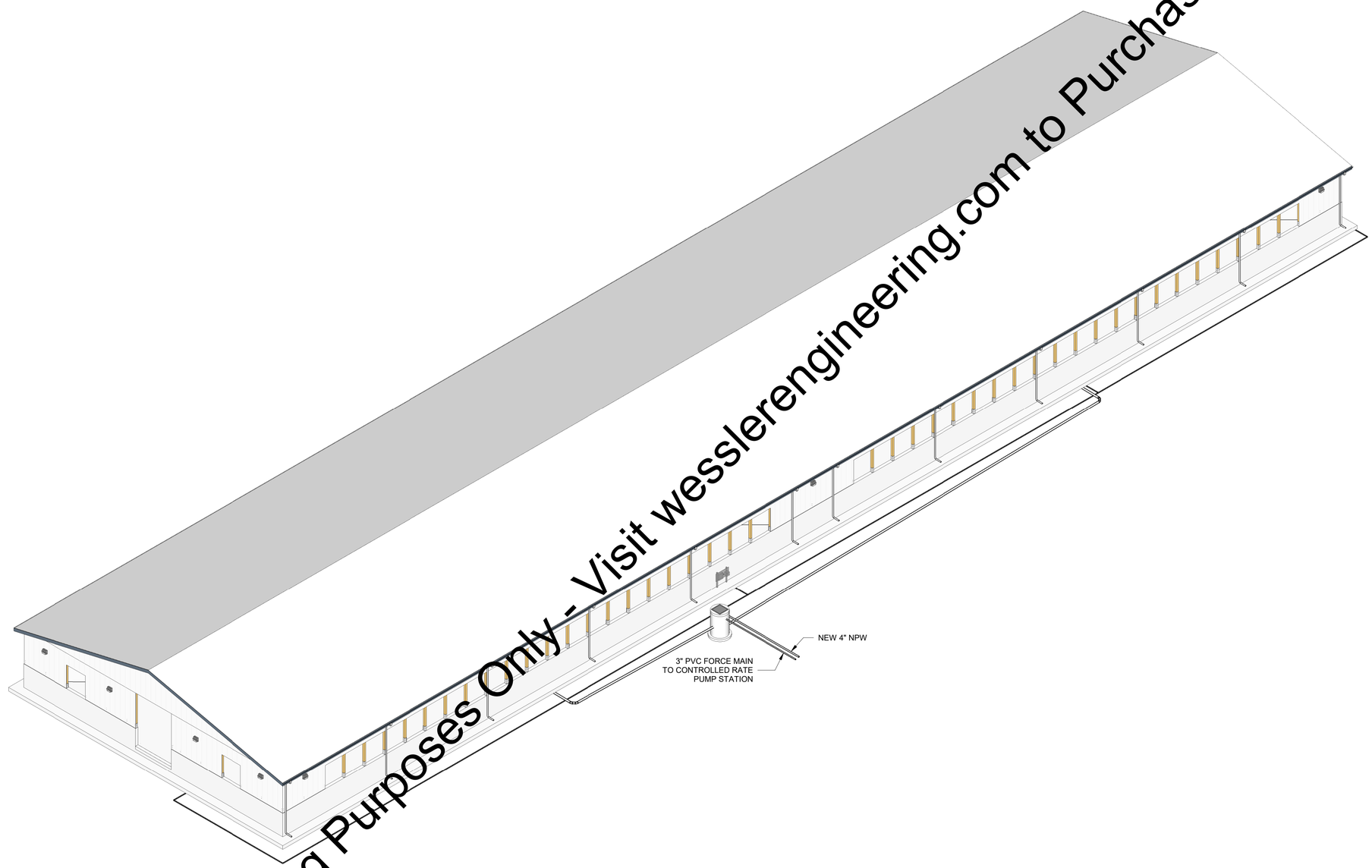

"For Viewing Purposes Only - Visit wesslerengineering.com to Purchase"

PERSPECTIVE VIEW - SOUTHEAST

SCALE: NONE

SCALE VERIFICATION	DRAWN BY	JL
BAR IS ONE INCH LONG ON ORIGINAL DRAWING	CHECKED BY	BRP
	APPROVED BY	RWH
	ISSUE DATE	MARCH 2020
	PROJECT NUMBER	193216-04-001

NO.	DATE	INITIALS	REVISION DESCRIPTION

ROBERT W. HOLDEN, II
REGISTERED
No. 10000096
STATE OF INDIANA
PROFESSIONAL ENGINEER
3/4/2020

WESSLER ENGINEERING

More than a Project™

WASTEWATER SYSTEM EXPANSION

CITY OF FRANKFORT, INDIANA

CONTRACT A - WASTEWATER TREATMENT PLANT

NEW LONG TERM BIOSOLIDS STORAGE BUILDING

PERSPECTIVE VIEW

SHEET NO. **14G1**

PAGE NO. 171

Plotted: 3/4/2020 4:48:35 PM C:\users\Jonathan\Documents\193216-New Biosolids Storage - CENTRAL- R19_Jonathan_ WE.rvt

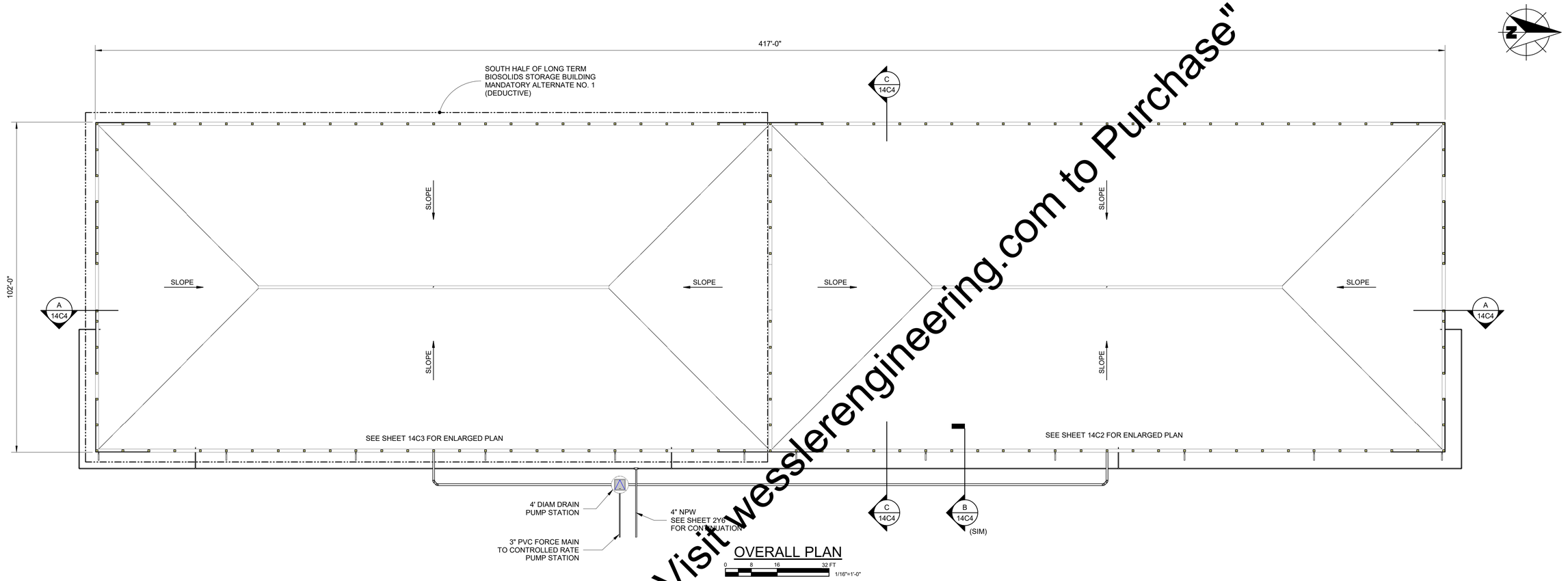

OVERALL PLAN

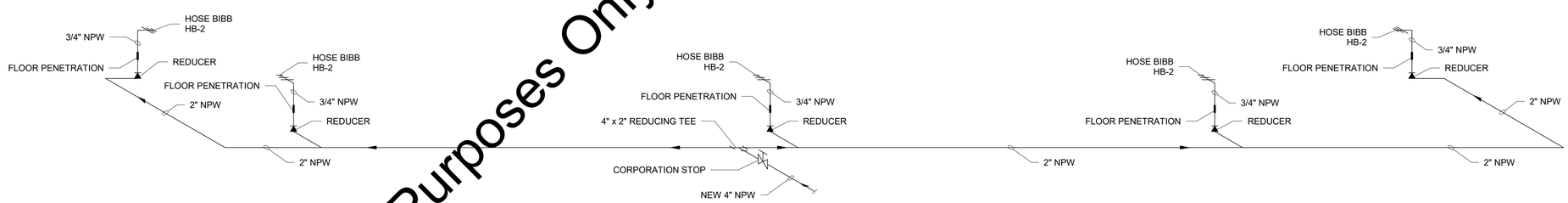

NON-POTABLE WATER LINE SCHEMATIC

SCALE: NONE

NOTES:

1. HOSE BIBB, HB-2 (OUTDOORS): 3/4" NPT INLET, 3/4" MALE HOSE NOZZLE, FROST PROOF AND WALL MOUNTED.
2. NON-POTABLE WATER LINE TO BE BURIED BELOW FROST LINE. ALL EXPOSED PIPING TO BE INSULATED.

"For Viewing Purposes Only - Visit wesslerengineering.com to Purchase"

SCALE VERIFICATION	DRAWN BY	JL
BAR IS ONE INCH LONG ON ORIGINAL DRAWING	CHECKED BY	BRP
	APPROVED BY	RWH
	ISSUE DATE	MARCH 2020
	PROJECT NUMBER	193216-04-001

NO.	DATE	INITIALS	REVISION DESCRIPTION

ROBERT W. HOLDEN, II REGISTERED No. 10000096 STATE OF INDIANA PROFESSIONAL ENGINEER 3/4/2020

WESSLER ENGINEERING

More than a Project™

WASTEWATER SYSTEM EXPANSION

CITY OF FRANKFORT, INDIANA

CONTRACT A - WASTEWATER TREATMENT PLANT

NEW LONG TERM BIOSOLIDS STORAGE BUILDING

OVERALL PLAN & NPW SCHEMATIC

SHEET NO. **14C1**

PAGE NO. 172

Plotted: 2/27/2020 11:31:36 AM C:\Users\JonathanL\Documents\193216-New Biosolids Storage - CENTRAL- R19_JonathanL_WE.rvt

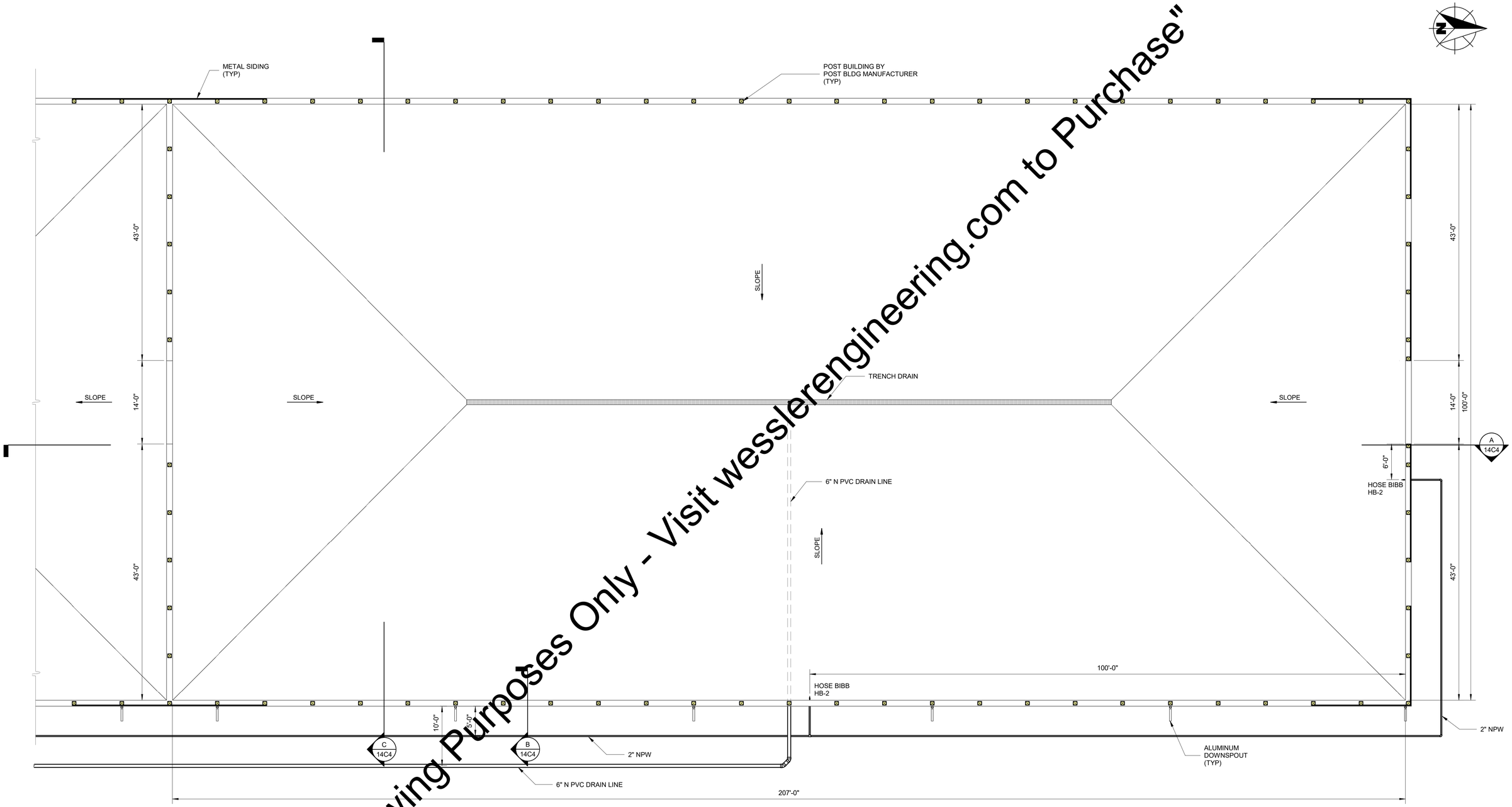

PARTIAL PLAN NORTH

0 4 8 16 FT
1/8"=1'-0"

"For Viewing Purposes Only - Visit wesslerengineering.com to Purchase"

SCALE VERIFICATION	DRAWN BY	JL
BAR IS ONE INCH LONG ON ORIGINAL DRAWING	CHECKED BY	BRP
	APPROVED BY	RWH
	ISSUE DATE	MARCH 2020
	PROJECT NUMBER	193216-04-001

NO.	DATE	INITIALS	REVISION DESCRIPTION

ROBERT W. HOLDEN, II REGISTERED No. 10000096 STATE OF INDIANA PROFESSIONAL ENGINEER 3/4/2020

WESSLER ENGINEERING
More than a Project™

WASTEWATER SYSTEM EXPANSION
CITY OF FRANKFORT, INDIANA
CONTRACT A - WASTEWATER TREATMENT PLANT

NEW LONG TERM BIOSOLIDS STORAGE BUILDING
PARTIAL PLAN NORTH

SHEET NO. **14C2**

PAGE NO. 173

Plotted: 2/27/2020 11:26:30 AM C:\users\JonathanL\Documents\193216-New Biosolids Storage - CENTRAL- R19_JonathanL_WE.rvt

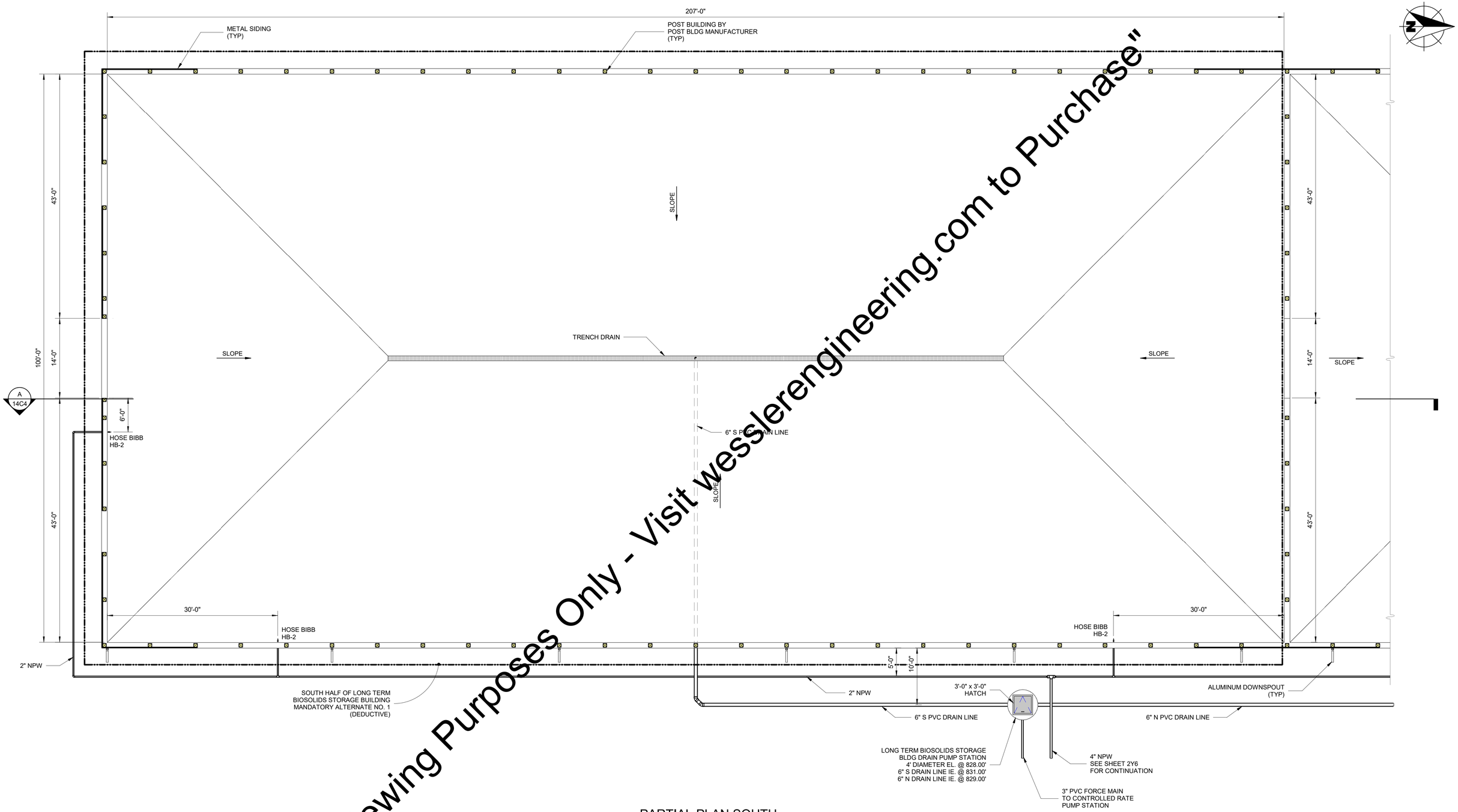

PARTIAL PLAN SOUTH

0 4 8 16 FT
1/8"=1'-0"

"For Viewing Purposes Only - Visit wesslerengineering.com to Purchase"

SCALE VERIFICATION	DRAWN BY	JL
BAR IS ONE INCH LONG ON ORIGINAL DRAWING	CHECKED BY	BRP
	APPROVED BY	RWH
	ISSUE DATE	MARCH 2020
	PROJECT NUMBER	193216-04-001

NO.	DATE	INITIALS	REVISION DESCRIPTION

ROBERT W. HOLDEN, II
REGISTERED
No. 10000096
STATE OF INDIANA
PROFESSIONAL ENGINEER
3/4/2020

WESSLER ENGINEERING
More than a Project™

WASTEWATER SYSTEM EXPANSION
CITY OF FRANKFORT, INDIANA
CONTRACT A - WASTEWATER TREATMENT PLANT

NEW LONG TERM BIOSOLIDS STORAGE BUILDING
PARTIAL PLAN SOUTH

SHEET NO. **14C3**

PAGE NO. 174

Plotted: 2/27/2020 11:26:34 AM C:\users\Jonathan\Documents\193216-New Biosolids Storage - CENTRAL- R19_Jonathan_ WE.rvt

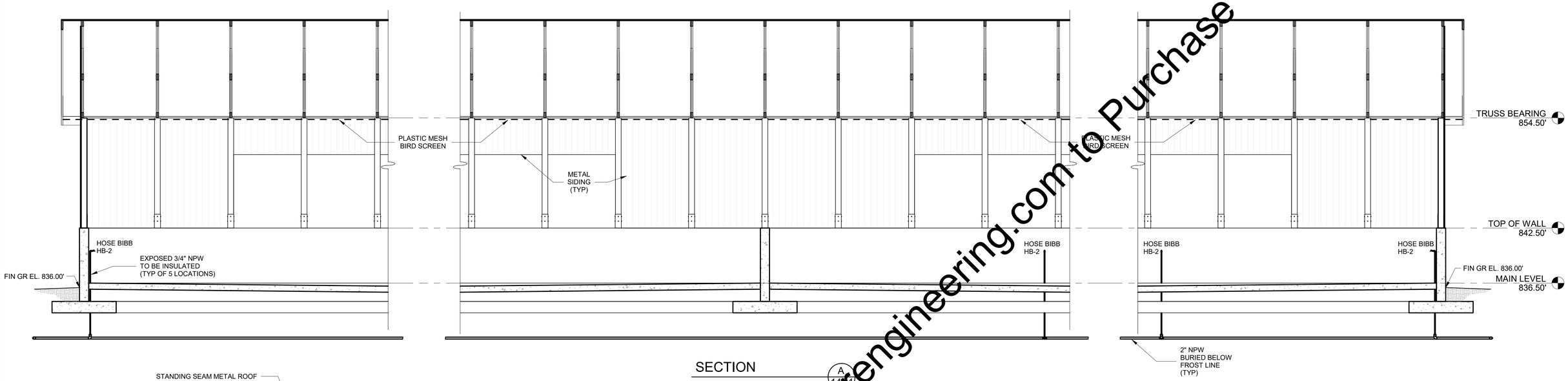

SECTION A 14C1

0 4 8 12 FT 3/16"=1'-0"

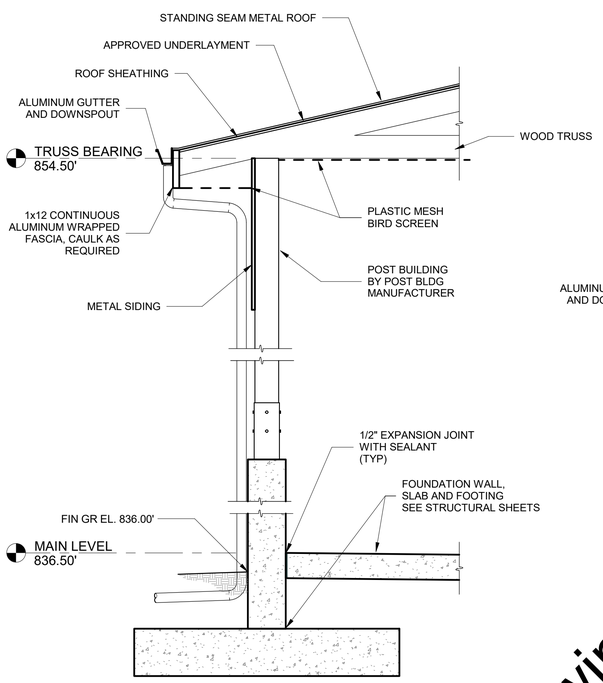

SECTION B 14C1

0 1 2 4 FT 1/2"=1'-0"

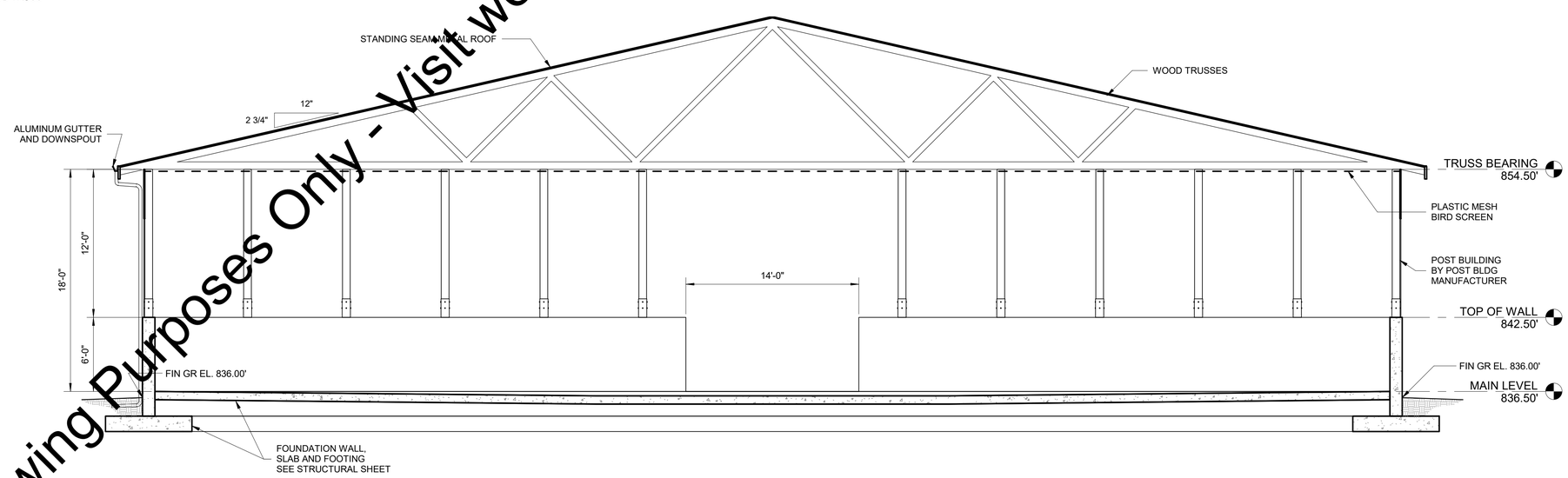

SECTION C 14C1

0 4 8 12 FT 3/16"=1'-0"

"For Viewing Purposes Only - Visit wesslerengineering.com to Purchase"

SCALE VERIFICATION	DRAWN BY	JL
BAR IS ONE INCH LONG ON ORIGINAL DRAWING	CHECKED BY	BRP
	APPROVED BY	RWH
	ISSUE DATE	MARCH 2020
	PROJECT NUMBER	193216-04-001

NO.	DATE	INITIALS	REVISION DESCRIPTION

ROBERT W. HOLDEN, II REGISTERED No. 10000096 STATE OF INDIANA PROFESSIONAL ENGINEER 3/4/2020

WESSLER ENGINEERING

More than a Project™

WASTEWATER SYSTEM EXPANSION

CITY OF FRANKFORT, INDIANA

CONTRACT A - WASTEWATER TREATMENT PLANT

NEW LONG TERM BIOSOLIDS STORAGE BUILDING SECTIONS

SHEET NO. **14C4**

PAGE NO. 175

Plotted: 2/27/2020 11:26:36 AM C:\users\Jonathan\Documents\193216-New Biosolids Storage - CENTRAL- R19_Jonathan_WE.rvt

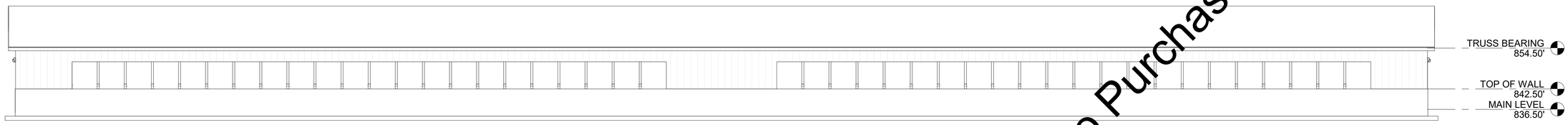

EAST ELEVATION

0 8 16 32 FT
1/16"=1'-0"

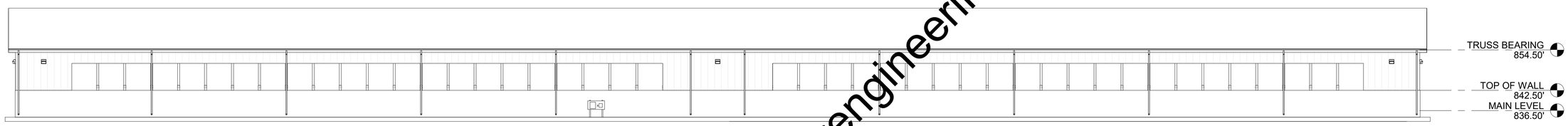

WEST ELEVATION

0 8 16 32 FT
1/16"=1'-0"

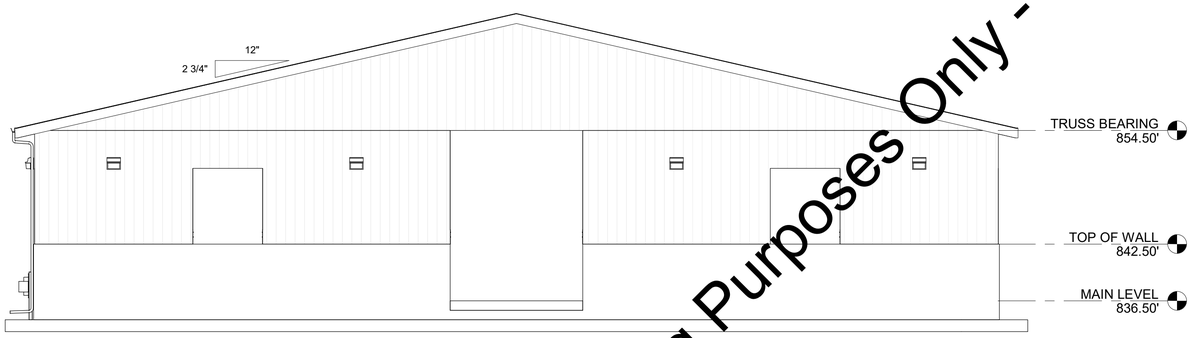

SOUTH ELEVATION

0 4 8 16 FT
1/8"=1'-0"

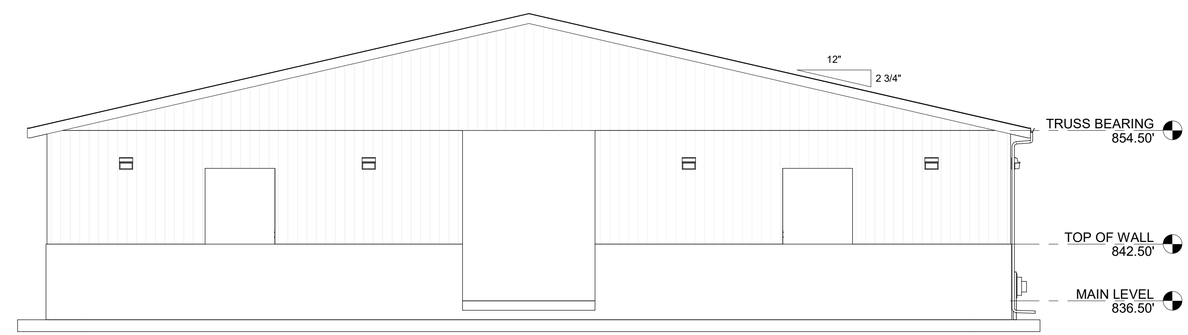

NORTH ELEVATION

0 4 8 16 FT
1/8"=1'-0"

"For Viewing Purposes Only - Visit wesslerengineering.com to Purchase"

SCALE VERIFICATION	DRAWN BY	JL
BAR IS ONE INCH LONG ON ORIGINAL DRAWING	CHECKED BY	BRP
	APPROVED BY	RWH
	ISSUE DATE	MARCH 2020
	PROJECT NUMBER	193216-04-001

NO.	DATE	INITIALS	REVISION DESCRIPTION

ROBERT W. HOLDEN, II
REGISTERED
No. 10000096
STATE OF INDIANA
PROFESSIONAL ENGINEER
3/4/2020

WESSLER ENGINEERING
More than a Project™

WASTEWATER SYSTEM EXPANSION

CITY OF FRANKFORT, INDIANA
CONTRACT A - WASTEWATER TREATMENT PLANT

NEW LONG TERM BIOSOLIDS STORAGE BUILDING ELEVATIONS

SHEET NO.
14C5

PAGE NO.
176

Plotted: 3/4/2020 4:50:57 PM C:\users\JonathanL\Documents\193216-New Biosolids Storage - CENTRAL- R19_JonathanL_WE.rvt

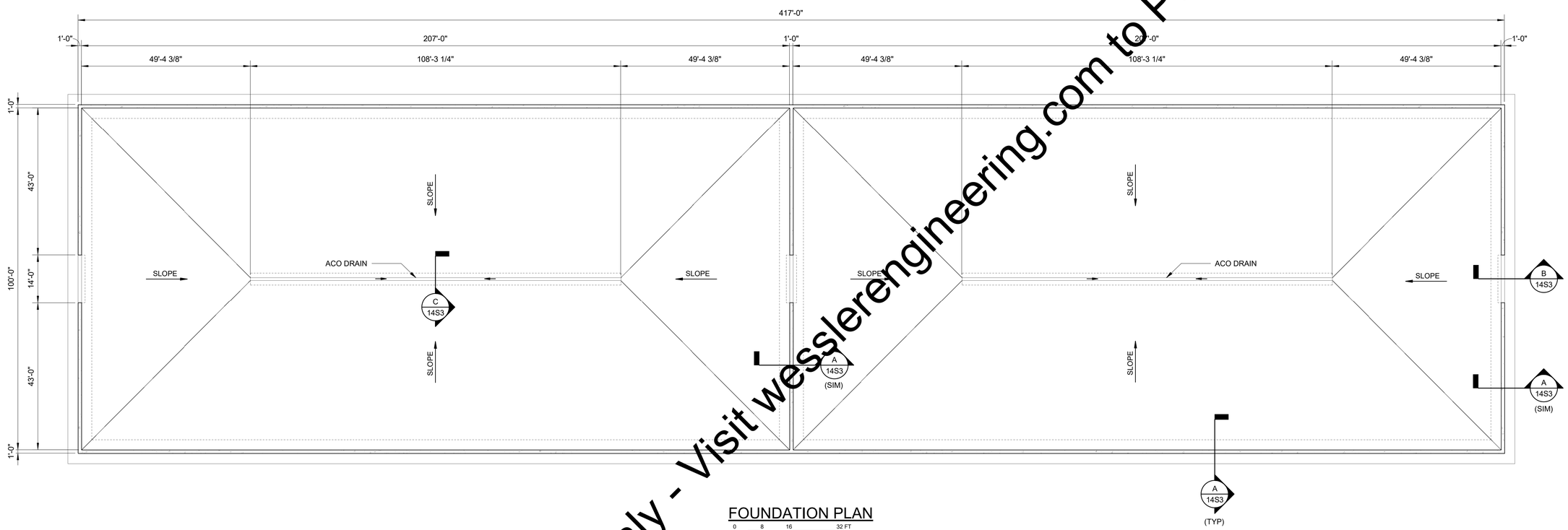

FOUNDATION PLAN

0 8 16 32 FT
1/16"=1'-0"

STRUCTURAL NOTES

1 SLAB CONTROL JOINTS AND WALL CONTROL JOINTS ARE AT DIFFERENT LOCATIONS.

2 SEE SLAB CONTROL JOINT DETAIL IN AREA 16.

3 WALL CONTROL JOINT DETAIL IS TYPICAL FOR ALL WALL CONTROL JOINTS.

4 POST FRAME BUILDING SHOWN FOR ILLUSTRATED PURPOSES ONLY. FINAL DESIGN TO BE PROVIDED BY POST FRAME BUILDING MANUFACTURER.

5 POST FRAME BUILDING MANUFACTURER IS TO PROVIDE DESIGN DRAWINGS CERTIFIED BY A QUALIFIED PROFESSIONAL ENGINEER REGISTERED IN THE STATE OF INDIANA.

6 DESIGN IS TO BE IN ACCORDANCE WITH THE 2014 INDIANA BUILDING CODE.

7 SEE SHEET 1S1 FOR STRUCTURAL GENERAL NOTES.

8 SEE SPECIFICATION SECTION 06100 - ROUGH CARPENTRY.

9 POST FRAME BUILDING ENGINEER IS TO SUBMIT RESULTANT LOADS FROM POST BUILDING TO CONCRETE FOUNDATION FOR REVIEW.

10 CONNECTION OF POST FRAME BUILDING TO CONCRETE FOUNDATION TO BE DETAILED AND DESIGNED BY POST BUILDING ENGINEER.

FOR STRUCTURAL GENERAL NOTES SEE 1S1.
FOR STANDARD DETAILS SEE AREA 16S SHEETS.

"For Viewing Purposes Only - Visit wesslerengineering.com to Purchase"

SCALE VERIFICATION	DRAWN BY	JL
BAR IS ONE INCH LONG ON ORIGINAL DRAWING	CHECKED BY	JRB
	APPROVED BY	JRB
	ISSUE DATE	MARCH 2020
	PROJECT NUMBER	193216-04-001

NO.	DATE	INITIALS	REVISION DESCRIPTION

JEFFREY ROSS BALLARD REGISTERED No. 60860191 STATE OF INDIANA PROFESSIONAL ENGINEER 3/4/2020

WESSLER ENGINEERING
More than a Project™

WASTEWATER SYSTEM EXPANSION
CITY OF FRANKFORT, INDIANA
CONTRACT A - WASTEWATER TREATMENT PLANT

NEW LONG TERM BIOSOLIDS STORAGE BUILDING
FOUNDATION PLAN

SHEET NO. **14S1**

PAGE NO. 177

Plotted: 2/27/2020 11:26:42 AM C:\users\JonathanL\Documents\193216-New Biosolids Storage - CENTRAL- R19_JonathanL_WE.rvt

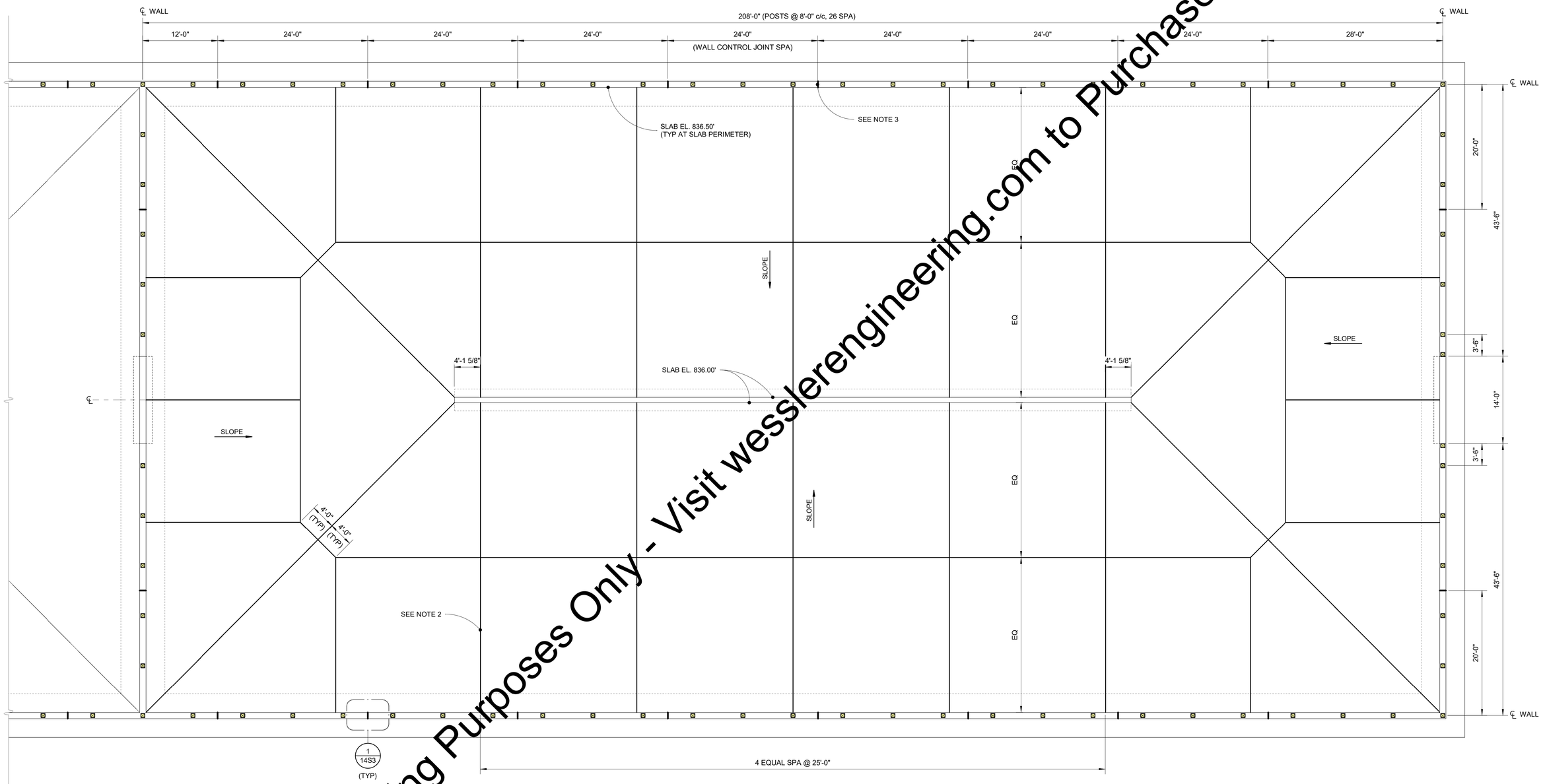

CONTROL JOINT PLAN

0 4 8 16 FT
1/8"=1'-0"

FOR STRUCTURAL GENERAL NOTES SEE 1S1.
FOR STANDARD DETAILS SEE AREA 16S SHEETS.

"For Viewing Purposes Only - Visit wesslerengineering.com to Purchase"

SCALE VERIFICATION	DRAWN BY	JL
BAR IS ONE INCH LONG ON ORIGINAL DRAWING	CHECKED BY	JRB
	APPROVED BY	JRB
	ISSUE DATE	MARCH 2020
	PROJECT NUMBER	193216-04-001

NO.	DATE	INITIALS	REVISION DESCRIPTION

JEFFREY ROSS BALLARD REGISTERED No. 60860191 STATE OF INDIANA PROFESSIONAL ENGINEER 3/4/2020

WESSLER ENGINEERING
More than a Project™

WASTEWATER SYSTEM EXPANSION
CITY OF FRANKFORT, INDIANA
CONTRACT A - WASTEWATER TREATMENT PLANT

NEW LONG TERM BIOSOLIDS STORAGE BUILDING
CONTROL JOINT PLAN

SHEET NO. **14S2**

PAGE NO. 178

Plotted: 2/27/2020 11:26:44 AM C:\users\JonathanL\Documents\193216-New Biosolids Storage - CENTRAL- R19_JonathanL_WE.rvt

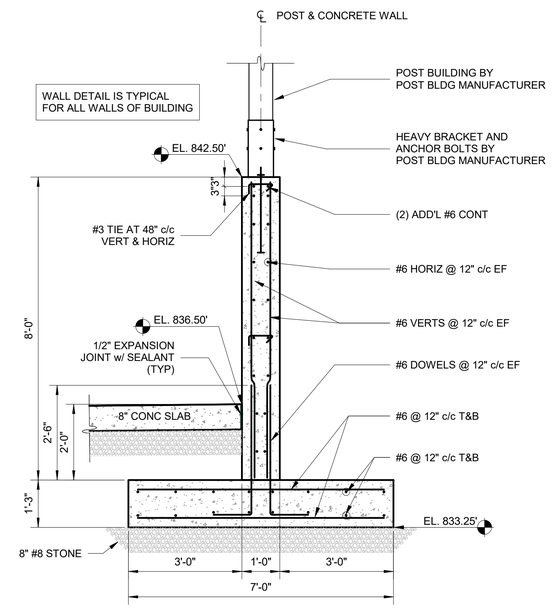

SECTION A 14S1

0 1 2 4 FT 1/2"=1'-0"

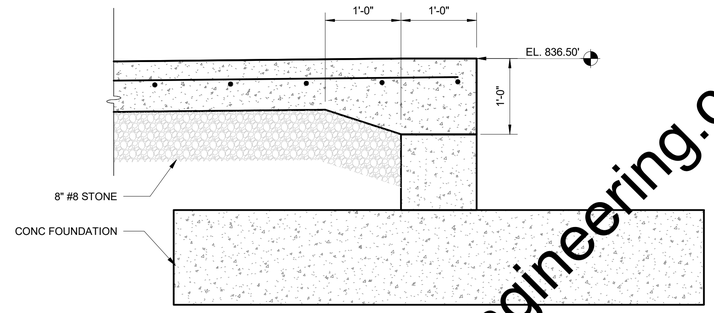

NOTE:

SIM AT COMMON WALL BETWEEN EACH HALF

SECTION B 14S1

0 1/2 1 2 FT 1"=1'-0"

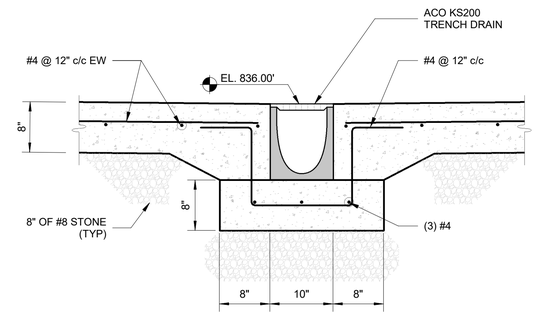

SECTION C 14S1

0 1/2 1 2 FT 1"=1'-0"

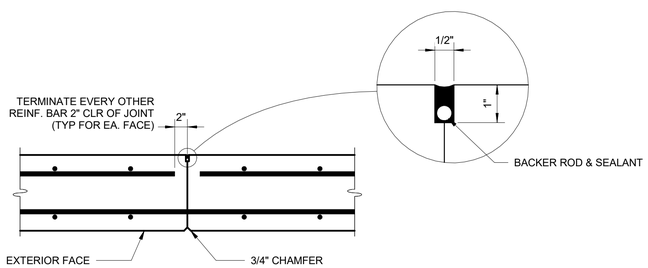

(TYP FOR ALL CONTROL JOINTS)

DETAIL 1 14S2

0 1/2 1 2 FT 1"=1'-0"

FOR STRUCTURAL GENERAL NOTES SEE 1S1.
FOR STANDARD DETAILS SEE AREA 16S SHEETS.

"For Viewing Purposes Only - Visit wesslerengineering.com to Purchase"

SCALE VERIFICATION	DRAWN BY	JL
BAR IS ONE INCH LONG ON ORIGINAL DRAWING	CHECKED BY	JRB
	APPROVED BY	JRB
	ISSUE DATE	MARCH 2020
	PROJECT NUMBER	193216-04-001

NO.	DATE	INITIALS	REVISION DESCRIPTION

JEFFREY ROSS BALLARD REGISTERED No. 60860191 STATE OF INDIANA PROFESSIONAL ENGINEER 3/4/2020

WESSLER ENGINEERING
More than a Project™

WASTEWATER SYSTEM EXPANSION
CITY OF FRANKFORT, INDIANA
CONTRACT A - WASTEWATER TREATMENT PLANT

NEW LONG TERM BIOSOLIDS STORAGE BUILDING
SECTIONS AND DETAILS

SHEET NO. **14S3**

PAGE NO. 179

Plotted: 2/27/2020 11:26:45 AM C:\users\JonathanL\Documents\193216-New Biosolids Storage - CENTRAL- R19_JonathanL_WE.rvt

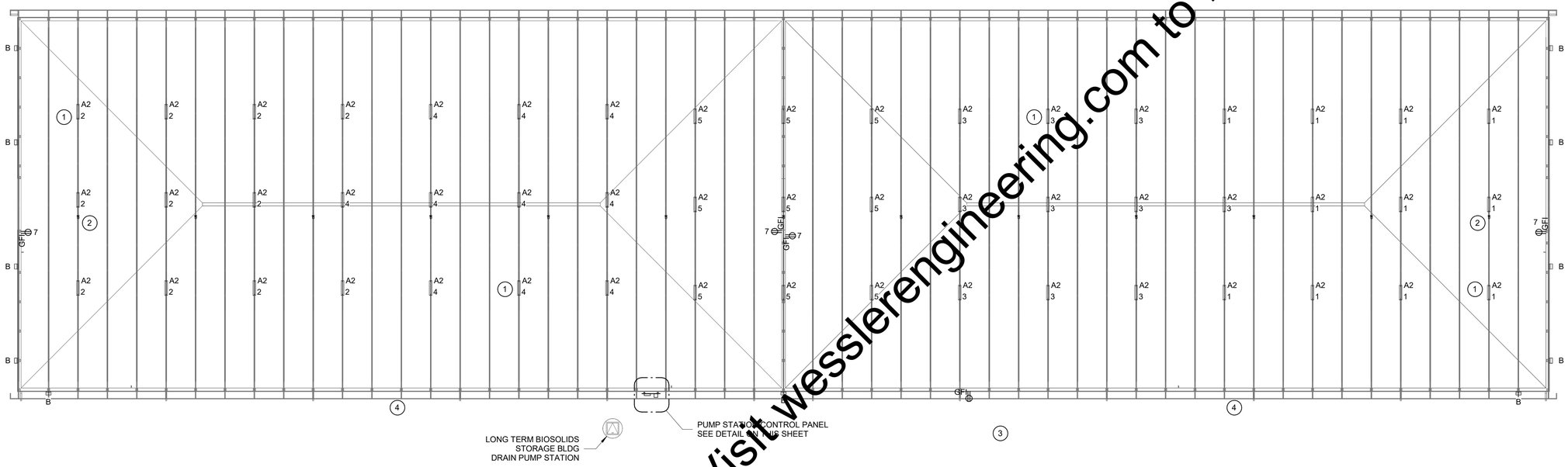

ELECTRICAL PLAN

0 8 16 32 FT
1/16"=1'-0"

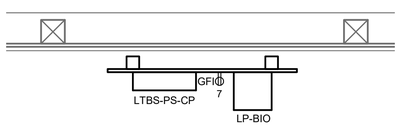

PUMP STATION CONTROL PANEL DETAIL

0 1 2 4 FT
1/2"=1'-0"

(#) POWER NOTES

1 LIGHTING FIXTURES TO BE MOUNTED TO UNDER SIDE OF TRUSS.

2 MOTION DETECTOR MOUNTED TO THE UNDER SIDE OF TRUSS. TYPICAL EVERY 32'-0".

3 SEE ELECTRICAL SITE PLAN FOR CONDUIT RUN.

4 FOR ALL CIRUITS TO PANEL LP-BIO THIS BUILDING USE #8 WIRE.

"For Viewing Purposes Only - Visit wesslerengineering.com to Purchase"

SCALE VERIFICATION	DRAWN BY	EAS
BAR IS ONE INCH LONG ON ORIGINAL DRAWING	CHECKED BY	WCM
	APPROVED BY	WCM
	ISSUE DATE	MARCH 2020
	PROJECT NUMBER	193216-04-001

NO.	DATE	INITIALS	REVISION DESCRIPTION

WAYNE C. MOORE REGISTERED No. 10707476 STATE OF INDIANA PROFESSIONAL ENGINEER 3/4/2020

WESSLER ENGINEERING
More than a Project™

WASTEWATER SYSTEM EXPANSION
CITY OF FRANKFORT, INDIANA
CONTRACT A - WASTEWATER TREATMENT PLANT

NEW LONG TERM BIOSOLIDS STORAGE BUILDING
POWER AND LIGHTING PLAN

SHEET NO. **14E1**
PAGE NO. 180

Plotted: 3/4/2020 4:45:49 PM J:\Frankfort\Projects\193216 Frankfort WWTP Exp\CAD 04-0011\Revit\Models\193216-EL-NEW BIOSOLIDS STORAGE - R19.rvt

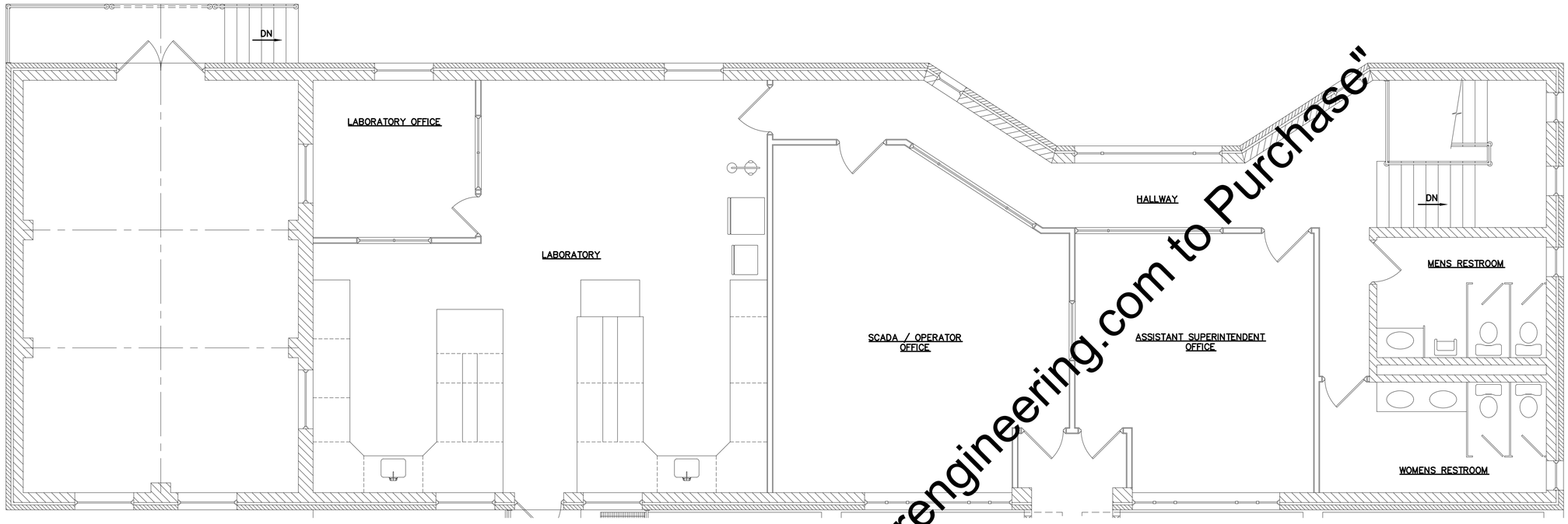

ADMINISTRATION BUILDING UPPER LEVEL
DEMOLITION PLAN
SCALE: 1/4" = 1'-0"

NOTES:
1. CONFERENCE ROOM DEMOLITIONTO INCLUDE ENTIRETY OF DRYWALL (APPROX 800 SF), SUSPENDED CEILING (APPROX 450 SF), LIGHTING AND WINDOW.

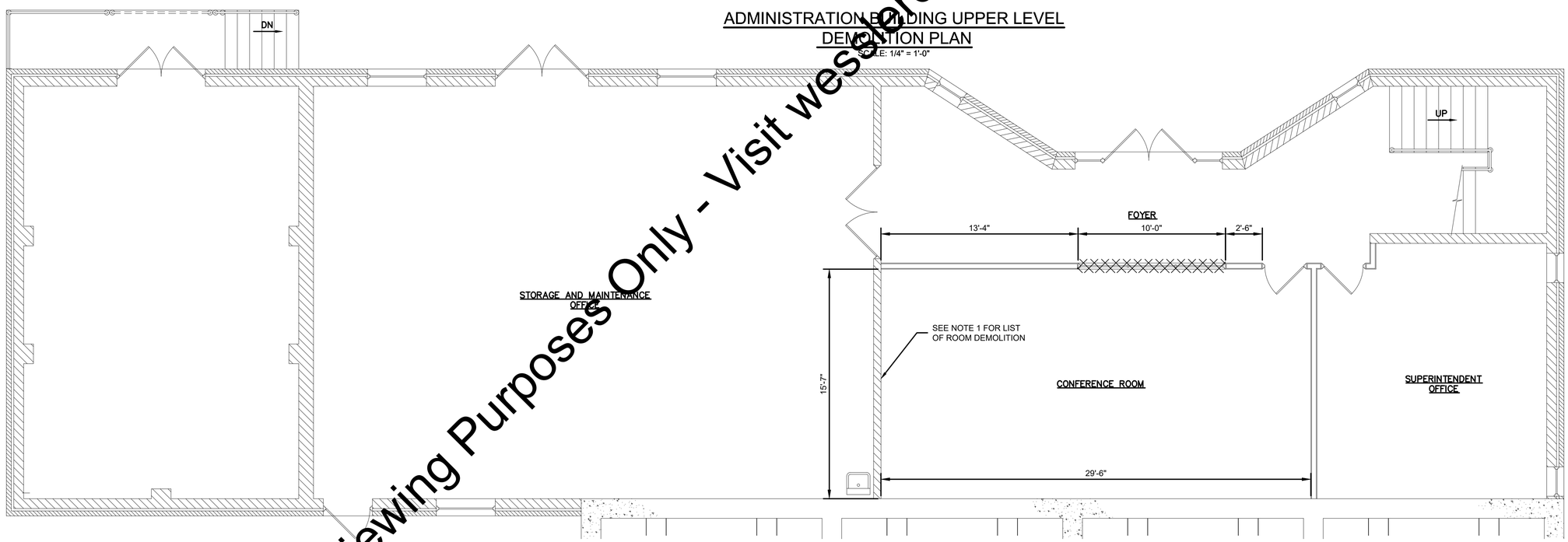

ADMINISTRATION BUILDING LOWER LEVEL
DEMOLITION PLAN
SCALE: 1/4" = 1'-0"

LEGEND

EXISTING FEATURES TO REMAIN

EXISTING FEATURES TO BE DEMOLISHED

"For Viewing Purposes Only - Visit wesslerengineering.com to Purchase"

SCALE VERIFICATION	DRAWN BY	TWH
BAR IS ONE INCH LONG ON ORIGINAL DRAWING	CHECKED BY	ALT
	APPROVED BY	RWH
	ISSUE DATE	MARCH 2020
	PROJECT NUMBER	193216-04-001

NO.	DATE	INITIALS	REVISION DESCRIPTIONS

ROBERT W. HOLDEN, II REGISTERED No. 10000096 STATE OF INDIANA PROFESSIONAL ENGINEER 03/04/2020

WESSLER ENGINEERING
More than a Project™

WASTEWATER SYSTEM EXPANSION
CITY OF FRANKFORT, INDIANA
CONTRACT A - WASTEWATER TREATMENT PLANT

EXISTING ADMIN BUILDING UPPER AND LOWER LEVEL DEMOLITION PLANS

SHEET NO.
15D1

Drawing: J:\FrankfortProjects\193216 Frankfort WWTP Exp\CAD 04-001\DWG\Sheets\Area 15 - EX-AB\15D AB-DEMO.dwg | Layout: 15D1 | Plotted: 02/28/20 @ 12:08:16 | LastSavedBy: TravisL

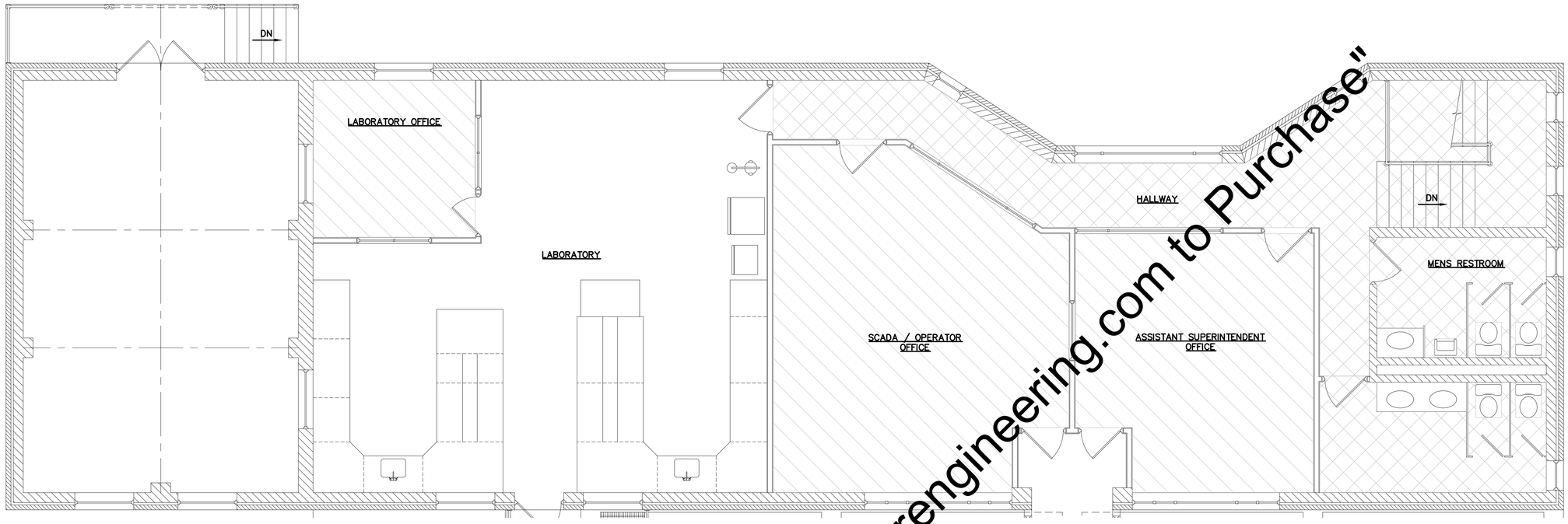

ADMINISTRATION BUILDING UPPER LEVEL
MODIFICATION PLAN
SCALE: 1/4" = 1'-0"

NOTE:
1. BUILDING MODIFICATIONS TO INCLUDE DRYWALL (800 SF IN CONFERENCE ROOM). SUSPENDED CEILING (400 SF IN CONFERENCE ROOM). RESINOUS FLOORING (APPROX 1,000 SF IN FOYER, HALLWAY AND WOMEN'S AND MEN'S RESTROOMS). CARPET (APPROX 450 SF IN CONFERENCE ROOM, APPROX 260 SF IN SUPERINTENDENT OFFICE, APPROX 270 SF IN ASSISTANT SUPERINDENT OFFICE, APPROX 460 SF IN SCADA/OPERATOR OFFICE, APPROX 120 SF IN LABORATORY OFFICE).
2. REPLACE 10'x6' CONFERENCE ROOM WINDOW WITH 6'x6' WINDOW. ADJUST FRAMING AND DRYWALL AS NECESSARY.

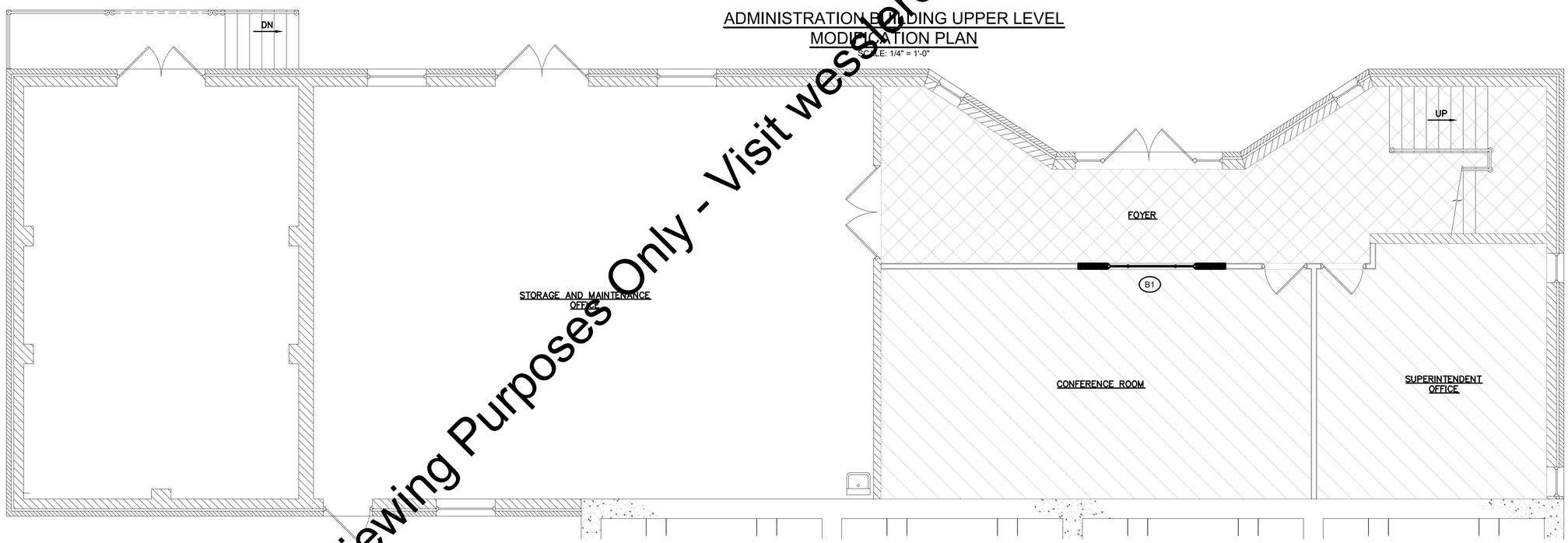

ADMINISTRATION BUILDING LOWER LEVEL
MODIFICATION PLAN
SCALE: 1/4" = 1'-0"

LEGEND
- EXISTING FEATURES
- NEW FEATURES
- RESINOUS FLOORING
- CARPET

"For Viewing Purposes Only - Visit wesslerengineering.com to Purchase"

SCALE VERIFICATION	DRAWN BY	TWH
BAR IS ONE INCH LONG ON ORIGINAL DRAWING	CHECKED BY	ALT
	APPROVED BY	RWH
	ISSUE DATE	MARCH 2020
	PROJECT NUMBER	193216-04-001

NO.	DATE	INITIALS	REVISION DESCRIPTIONS

ROBERT W. HOLDEN, II REGISTERED No. 10000096 STATE OF INDIANA PROFESSIONAL ENGINEER 03/04/2020

WESSLER ENGINEERING
More than a Project™

WASTEWATER SYSTEM EXPANSION
CITY OF FRANKFORT, INDIANA
CONTRACT A - WASTEWATER TREATMENT PLANT

EXISTING ADMIN BUILDING UPPER AND LOWER MODIFICATION PLANS

SHEET NO. **15C1**

Drawing: J:\FrankfortProjects\193216 Frankfort WWTP Exp\CAD 04-001\DWG\Sheets\Area 15 - EX-AB\15C AB-MOD.dwg | Layout: 15C1 | Plotted: 02/28/20 @ 12:26:35 | LastSavedBy: TravisL

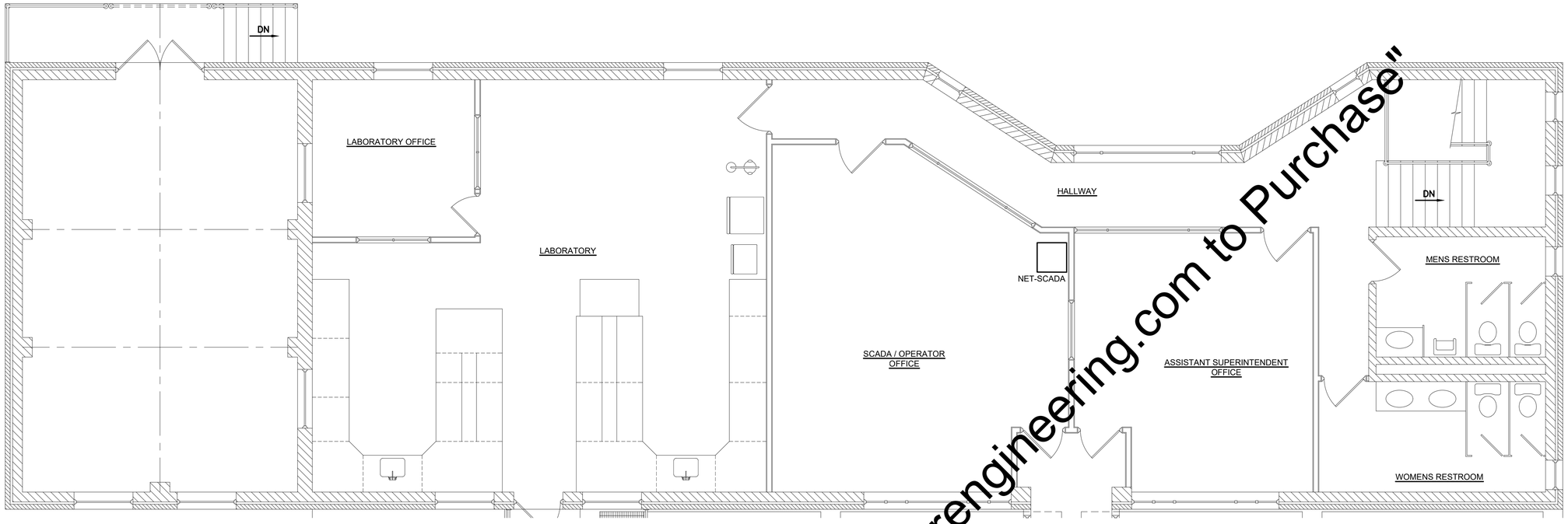

ADMINISTRATION BUILDING UPPER LEVEL
ELECTRICAL PLAN

SCALE: 1/4" = 1'-0"

KEY NOTES

1. RECONNECT TO EXISTING RECEPTACLE CIRCUIT
2. RECONNECT TO EXISTING LIGHTING CIRCUIT

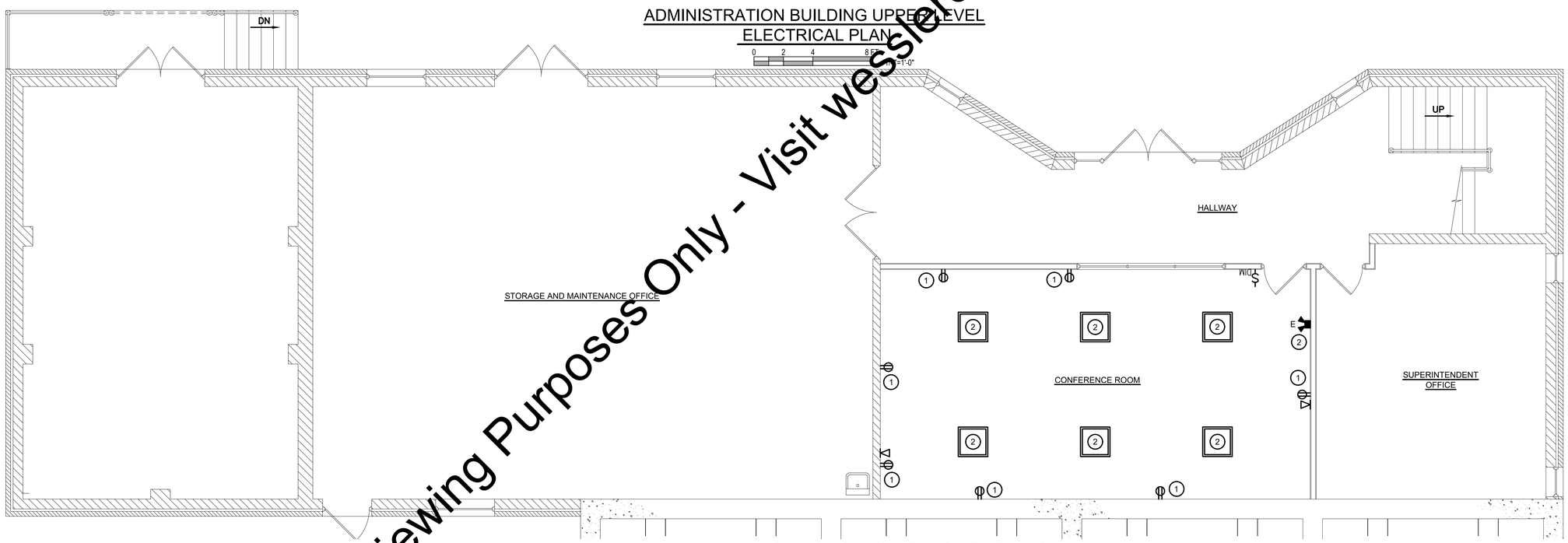

ADMINISTRATION BUILDING LOWER LEVEL
ELECTRICAL PLAN

SCALE: 1/4" = 1'-0"

"For Viewing Purposes Only - Visit wesslerengineering.com to Purchase"

SCALE VERIFICATION	DRAWN BY	EAS
BAR IS ONE INCH LONG ON ORIGINAL DRAWING	CHECKED BY	DRT
	APPROVED BY	WCM
	ISSUE DATE	MARCH 2020
	PROJECT NUMBER	193216-04-001

NO.	DATE	INITIALS	REVISION DESCRIPTIONS

WAYNE C. MOORE REGISTERED No. 10707476 STATE OF INDIANA PROFESSIONAL ENGINEER 03/04/2020

WESSLER ENGINEERING
More than a Project™

WASTEWATER SYSTEM EXPANSION

CITY OF FRANKFORT, INDIANA
CONTRACT A - WASTEWATER TREATMENT PLANT

EXISTING ADMIN BUILDING UPPER AND LOWER POWER PLANS

SHEET NO. **15E1**

PAGE NO. 183

Drawing: J:\Frankfort\Projects\193216 Frankfort WWTP Exp\CAD 04-001\DWG\Sheets\Area 15 - EX-AB\15E AB-EL.dwg | Layout: 15E1 | Plotted: 03/04/20 @ 06:11:53 | LastSavedBy: RyanM

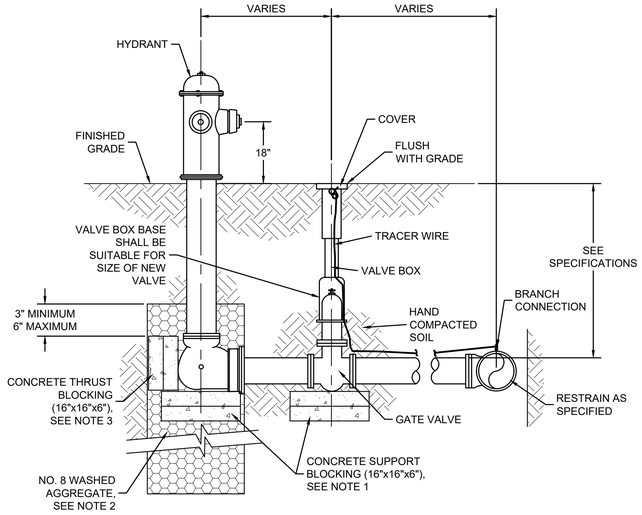

NOTES:
1. SET HYDRANT AND VALVE ON CONCRETE SUPPORT BLOCKING.
2. PLACE 2'x3' DEEP DRAINAGE PIT. EXTEND A MINIMUM OF 3", AND MAXIMUM OF 6", ABOVE HYDRANT BOOT.
3. RESTRAINED FITTINGS SHALL BE USED IN ADDITION TO CONCRETE THRUST BLOCKING. RESTRAINTS MUST BE USED FROM THE DISTRIBUTION MAIN TO THE HYDRANT. PLACE CONCRETE BLOCKS BEHIND HYDRANT TO UNDISTURBED EARTH.
4. VALVE BOX SHALL BE CENTERED AND PLUMB OVER VALVE OPERATING NUT.

HYDRANT ASSEMBLY

SCALE: NONE

NOTE:
1. THE DETAIL SHOWN HERE SHOWS THE INSTALLATION REQUIREMENTS FOR BOTH FIRE HYDRANTS AND POST HYDRANTS. SEE SPECIFICATION SECTION 15080 FOR HYDRANT AND ISOLATION VALVE SIZING.

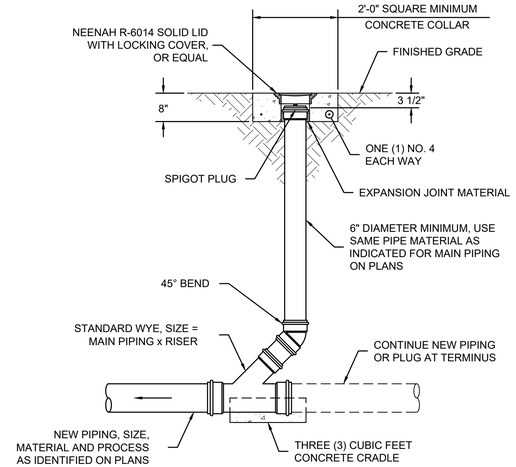

TYPE 1 CLEANOUT

SCALE: NONE

PIPE SIZE	8" TO 16"	18" TO 30"	33" AND OVER
BEDDING BELOW THE PIPE BARREL	4"	OD / 4	8"

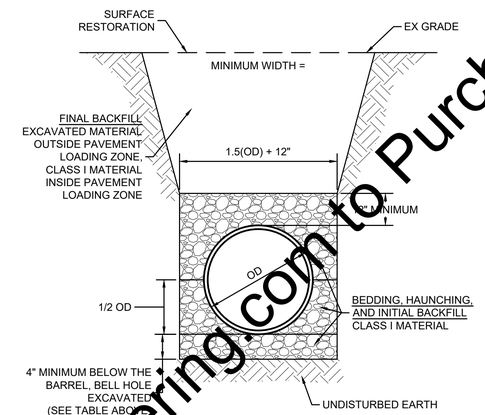

FLEXIBLE (HDPE, PP, PVC) PIPE TRENCH

SCALE: NONE

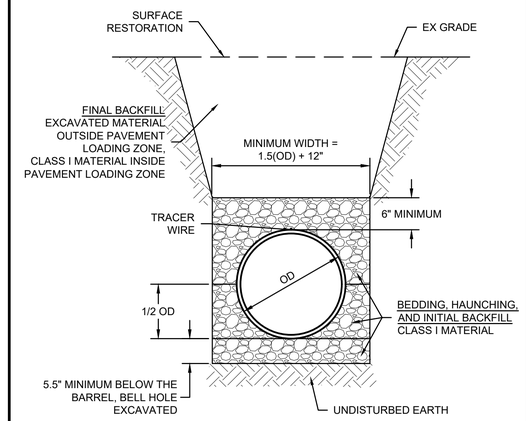

PLASTIC PIPE TRENCH (PRESSURE)

SCALE: NONE

RESTRAINING SCHEDULE					
	"A"		"B"		
SIZE	TEE & PLUG	90° BEND	45° BEND	22½° BEND	11¼° BEND
6"	12'-0"	17'-0"	10'-0"	6'-0"	3'-0"
8"	16'-0"	22'-0"	13'-0"	8'-0"	4'-0"
10"	19'-0"	27'-0"	16'-0"	9'-0"	5'-0"
12"	23'-0"	32'-0"	19'-0"	11'-0"	6'-0"
14"	26'-0"	36'-0"	21'-0"	12'-0"	7'-0"
16"	29'-0"	41'-0"	24'-0"	14'-0"	8'-0"
18"	32'-0"	45'-0"	26'-0"	15'-0"	8'-0"
20"	35'-0"	50'-0"	29'-0"	16'-0"	3'-0"
24"	41'-0"	58'-0"	34'-0"	19'-0"	10'-0"
30"	50'-0"	70'-0"	40'-0"	22'-0"	12'-0"
36"	58'-0"	82'-0"	46'-0"	26'-0"	14'-0"
42"	66'-0"	93'-0"	52'-0"	29'-0"	15'-0"
48"	74'-0"	104'-0"	58'-0"	33'-0"	17'-0"

(LENGTH IN FEET REQUIRED FOR RESTRAINING JOINTS)

NOTES:
1. THE LENGTHS INDICATED IN THE TABLE ABOVE APPLY TO PRESSURE PIPING INCLUDING FORCE MAINS, PUMPED LINES, AND WATER LINES.
2. LOW-HEAD D.I. PROCESS PIPING AND AIR PIPING REQUIRE RESTRAINED JOINTS ONLY AT FITTINGS AND AT JOINTS WITHIN 15 FEET OF FITTINGS.
3. GRAVITY SEWER AND DRAIN LINES DO NOT REQUIRE RESTRAINED JOINTS.
4. THE LENGTHS OF PIPE WITH RESTRAINED JOINTS ARE BASED ON A COMPACTED SILTY SOIL SURROUNDING THE PIPE.

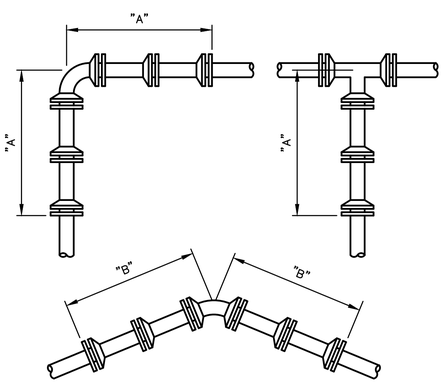

RESTRAINED JOINTS DETAILS

SCALE: NONE

PIPE SIZE	3" TO 16"	18" TO 30"	32" AND OVER
BEDDING BELOW THE PIPE BARREL	4"	OD / 4	8"

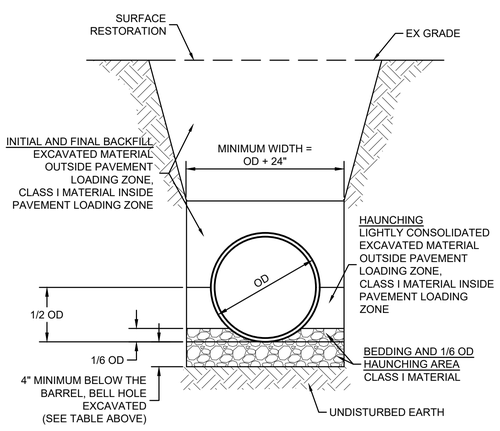

DUCTILE IRON (DI) PIPE TRENCH

SCALE: NONE

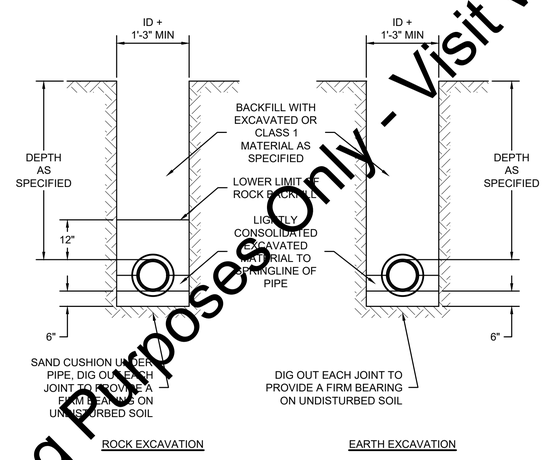

BURIED RIGID PIPE INSTALLATION

SCALE: NONE

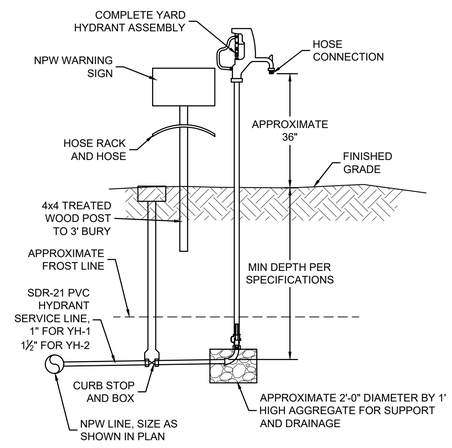

YARD HYDRANT

SCALE: NONE

"For Viewing Purposes Only - Visit wesslerengineering.com to Purchase"

SCALE VERIFICATION	DRAWN BY	JRW
BAR IS ONE INCH LONG ON ORIGINAL DRAWING	CHECKED BY	DRI
	APPROVED BY	RWH
	ISSUE DATE	MARCH 2020
	PROJECT NUMBER	193216-04-001

NO.	DATE	INITIALS	REVISION DESCRIPTIONS

ROBERT W. HOLDEN, II REGISTERED No. 10000096 STATE OF INDIANA PROFESSIONAL ENGINEER 03/04/2020

WESSLER ENGINEERING
More than a Project™

WASTEWATER SYSTEM EXPANSION

CITY OF FRANKFORT, INDIANA
CONTRACT A - WASTEWATER TREATMENT PLANT

MISCELLANEOUS SITE DETAILS

SHEET NO. **16Y1**

PAGE NO. 184

Drawing: J:\Frankfort\Projects\193216 Frankfort WWTP Exp\CAD 04-001\DWG\Sheets\Area 16 - MD\16Y-MISC DTLS.dwg | Layout: 16Y1 | Plotted: 02/28/20 @ 12:44:55 | LastSavedBy: JasonW

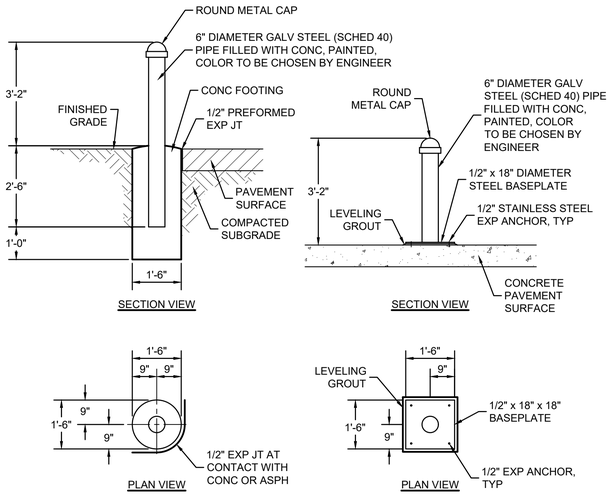

TYPES 1 AND 2 BOLLARDS

TYPE 3 BOLLARD

NOTES:
1. TYPE 1 BOLLARD SHALL BE AS SHOWN.
2. TYPE 2 BOLLARD SHALL SIMILAR TO TYPE 1, WITH 8" DIAMETER 6' TALL PIPE, WITH 42" BURY, AND WITH 24" CONCRETE FOOTING.
3. TYPE OF BOLLARD INSTALLED SHALL BE AS IDENTIFIED ON THE DRAWINGS OR AS DIRECTED BY THE ENGINEER.

BOLLARDS

SCALE: NONE

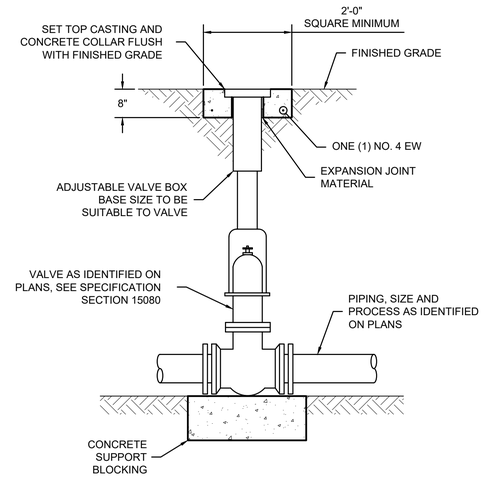

NOTES:
1. DETAIL APPLIES TO PLUG, GATE AND BUTTERFLY VALVES.

VALVE AND BOX

SCALE: NONE

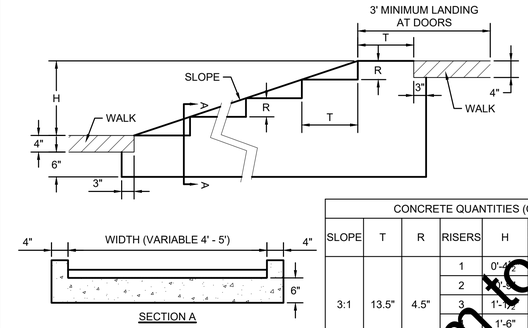

CONCRETE QUANTITIES (CYS)						
SLOPE	T	R	RISERS	H	WIDTH	
					[illegible]	5'
3:1	13.5"	4.5"	1	0'-4[illegible]	0.46	0.56
			2	0'-[illegible]	0.79	0.96
			3	1'-1[illegible]	1.19	1.45
			4	1'-6"	1.67	2.02
			5	1'-10½"	2.22	2.69
4:1	[illegible]	3.5"	1	0'-3½"	0.45	0.55
			2	0'-7"	0.76	0.92
			3	0'-10½"	1.12	1.36
			4	1'-2"	1.54	1.86
			5	1'-5½"	2.02	2.45
			6	1'-9"	2.56	3.10

SIDEWALK STEPS (FOR RISES LESS THAN 2')

SCALE: NONE

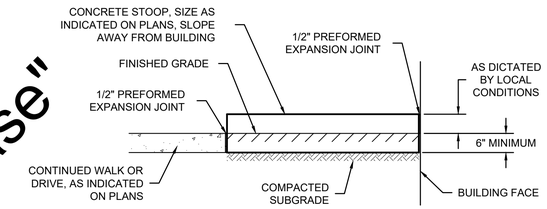

CONCRETE STOOP

SCALE: NONE

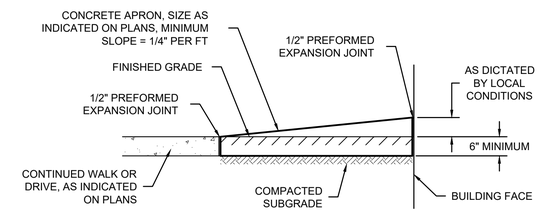

CONCRETE APRON

SCALE: NONE

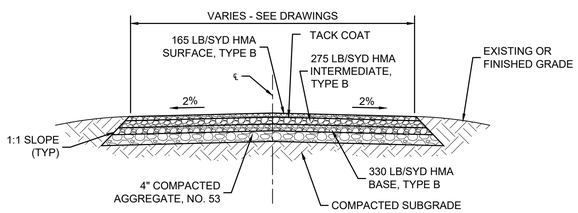

TYPE 1 ASPHALT DRIVE TYPICAL SECTION

SCALE: NONE

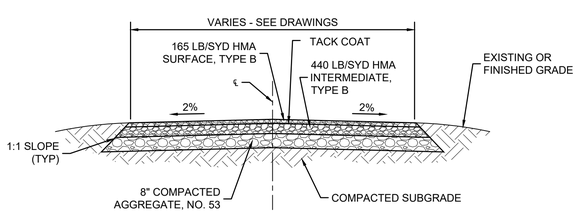

TYPE 2 ASPHALT DRIVE TYPICAL SECTION

SCALE: NONE

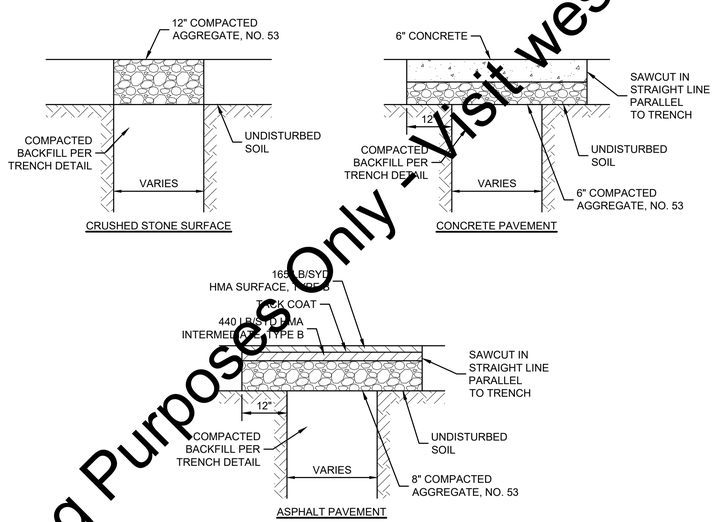

PAVEMENT REPAIR

SCALE: NONE

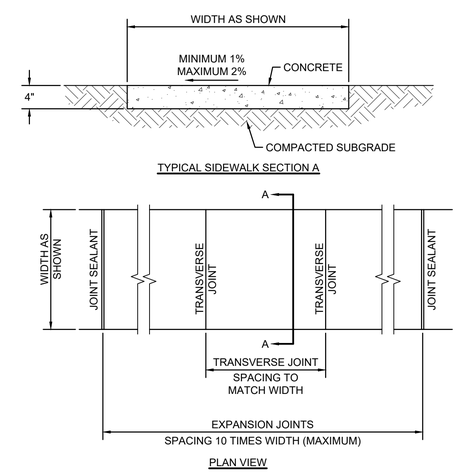

CONCRETE SIDEWALK

SCALE: NONE

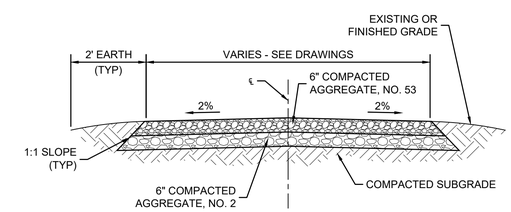

CRUSHED STONE DRIVE

SCALE: NONE

SCALE VERIFICATION	DRAWN BY	JRM
BAR IS ONE INCH LONG ON ORIGINAL DRAWING	CHECKED BY	DRI
	APPROVED BY	RWH
	ISSUE DATE	MARCH 2020
	PROJECT NUMBER	193216-04-001

NO.	DATE	INITIALS	REVISION DESCRIPTIONS

ROBERT W. HOLDEN JR. REGISTERED No. 10000096 STATE OF INDIANA PROFESSIONAL ENGINEER 03/04/2020

WESSLER ENGINEERING
More than a Project™

WASTEWATER SYSTEM EXPANSION
CITY OF FRANKFORT, INDIANA
CONTRACT A - WASTEWATER TREATMENT PLANT

MISCELLANEOUS SITE DETAILS

SHEET NO. **16Y2**
PAGE NO. 185

"For Viewing Purposes Only - Visit wesslerengineering.com to Purchase"

Drawing: J:\FrankfortProjects\193216 Frankfort WWTP Exp\CAD 04-001\DWG\Sheets\Area 16 - MD\16Y-MISC DTLS.dwg | Layout: 16Y2 | Plotted: 02/28/20 @ 12:44:56 | LastSavedBy: JasonW

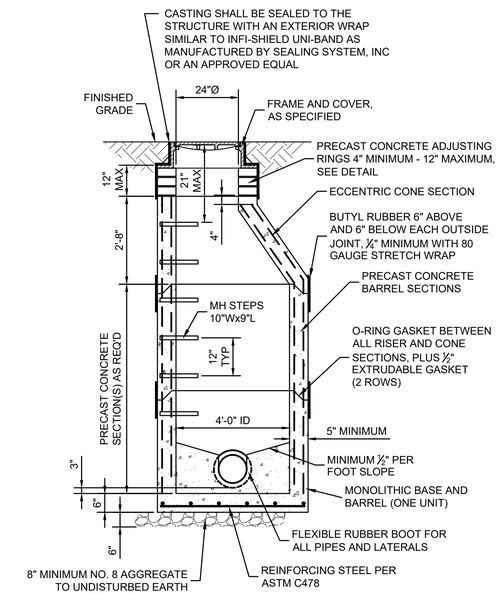

STANDARD SANITARY SEWER MANHOLE

SCALE: NONE

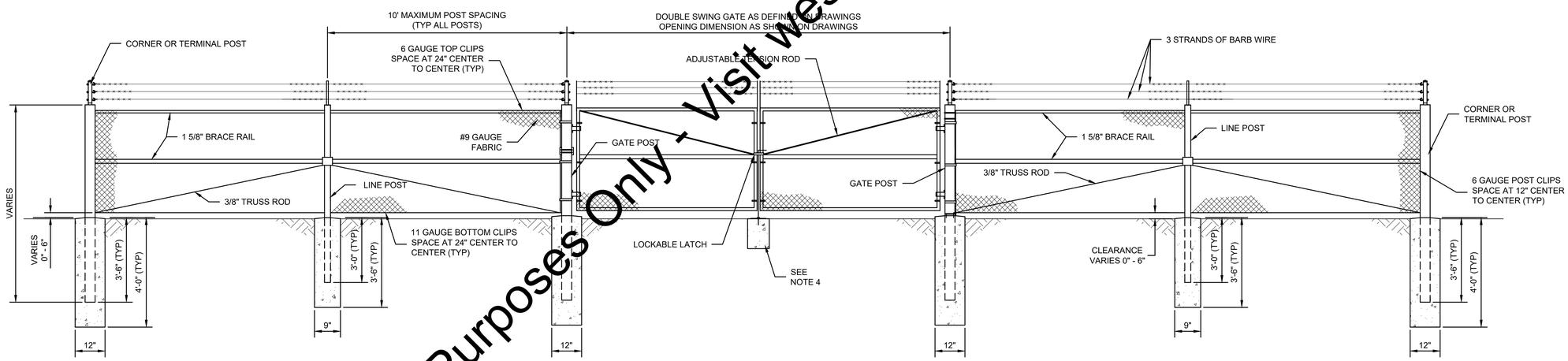

CHAIN LINK FENCE AND DOUBLE PANEL GATE

SCALE: NONE

NOTES:

1. TERMINAL POSTS SHALL BE USED AT EACH FENCE CORNER OR END. GATE POSTS SHALL BE USED AT EACH GATE OPENING. LINE POSTS SHALL BE USED AT MAXIMUM 10' SPACING WHERE TERMINAL, GATE OR PULL POSTS ARE NOT REQUIRED.
2. PULL POSTS SHALL BE SPACED AT A MAXIMUM OF 500' ON LONG STRAIGHT RUNS ALONG CONSISTENT GRADES, AT EVERY HORIZONTAL BEND GREATER THAN 10° WHERE TERMINAL POSTS ARE NOT REQUIRED, AND AT EVERY MAJOR CHANGE OF GRADE. PULL POSTS SHALL NOT BE USED AS GATE OR TERMINAL POSTS.
3. ALL CONCRETE IN POST ANCHORS SHALL CONFORM TO THE SPECIFICATIONS.
4. PROVIDE 8" X 8" X 12" DEEP CONCRETE BLOCKING FOR GATE LATCH.

"For Viewing Purposes Only - Visit wesslerengineering.com to Purchase"

SCALE VERIFICATION	DRAWN BY	JRM
BAR IS ONE INCH LONG ON ORIGINAL DRAWING	CHECKED BY	DRI
	APPROVED BY	RWH
	ISSUE DATE	MARCH 2020
	PROJECT NUMBER	193216-04-001

NO.	DATE	INITIALS	REVISION DESCRIPTIONS

ROBERT W. HOLDEN II REGISTERED No. 10000096 STATE OF INDIANA PROFESSIONAL ENGINEER 03/04/2020

WESSLER ENGINEERING
More than a Project™

WASTEWATER SYSTEM EXPANSION

CITY OF FRANKFORT, INDIANA

CONTRACT A - WASTEWATER TREATMENT PLANT

MISCELLANEOUS SITE DETAILS

SHEET NO. **16Y3**

PAGE NO. 186

Drawing: J:\FrankfortProjects\193216 Frankfort WWTP Exp\CAD 04-001\DWG\Sheets\Area 16 - MD\16Y-MISC DTLS.dwg | Layout: 16Y3 | Plotted: 02/28/20 @ 12:44:57 | LastSavedBy: JasonW

VALVE SCHEDULE

NO.	SIZE	TYPE	FITTING	LOCATION	SERVICE	OPERATOR	ACCESSORIES	REMARKS
SITE WORK - AREA 2								
EQ-PV07	18	PLUG	MJ	YARD	SE LAGOON EFFLUENT LINE TO CRPS	NUT	GEAR OPERATOR, EXT. STEM, VALVE BOX AND COVER	
EQ-PV08	18	PLUG	MJ	YARD	SW LAGOON EFFLUENT LINE TO CRPS	NUT	GEAR OPERATOR, EXT. STEM, VALVE BOX AND COVER	
WAS-PV10	6	PLUG	MJ	YARD	WAS TO RDT	NUT	EXT. STEM, VALVE BOX AND COVER	
WAS-PV11	6	PLUG	MJ	YARD	WAS TO SPB OR ANAEROBIC DIGESTERS	NUT	EXT. STEM, VALVE BOX AND COVER	
WAS-PV12	6	PLUG	MJ	YARD	WAS TO ANAEROBIC DIGESTERS	NUT	EXT. STEM, VALVE BOX AND COVER	
WAS-PV18	8	PLUG	MJ	YARD	TWAS TO ANAEROBIC DIGESTER	NUT	GEAR OPERATOR, EXT. STEM, VALVE BOX AND COVER	
EXISTING HEADWORKS STRUCTURE - AREA 3								
RAW-PV01	16	PLUG	FLANGE	HEADWORKS	RAW SEWAGE PUMP NO. 1 SUCTION	HANDWHEEL	GEAR OPERATOR	
RAW-PV02	16	PLUG	FLANGE	HEADWORKS	RAW SEWAGE PUMP NO. 2 SUCTION	HANDWHEEL	GEAR OPERATOR	
RAW-PV03	16	PLUG	FLANGE	HEADWORKS	RAW SEWAGE PUMP NO. 3 SUCTION	HANDWHEEL	GEAR OPERATOR	
RAW-PV04	16	PLUG	FLANGE	HEADWORKS	RAW SEWAGE PUMP NO. 4 SUCTION	HANDWHEEL	GEAR OPERATOR	
RAW-PV05	18	PLUG	FLANGE	HEADWORKS	RAW SEWAGE PUMP NO. 1 DISCHARGE	HANDWHEEL	CHAINWHEEL AND GEAR OPERATOR	
RAW-PV06	18	PLUG	FLANGE	HEADWORKS	RAW SEWAGE PUMP NO. 2 DISCHARGE	HANDWHEEL	CHAINWHEEL AND GEAR OPERATOR	
RAW-PV07	18	PLUG	FLANGE	HEADWORKS	RAW SEWAGE PUMP NO. 3 DISCHARGE	HANDWHEEL	CHAINWHEEL AND GEAR OPERATOR	
RAW-PV08	18	PLUG	FLANGE	HEADWORKS	RAW SEWAGE PUMP NO. 4 DISCHARGE	HANDWHEEL	CHAINWHEEL AND GEAR OPERATOR	
EXISTING FLOW EQUALIZATION LAGOONS AND LAGOON CONTROL BUILDING - AREA 4								
EQ-PV01	12	PLUG	MJ	EQ LAGOONS	SE EFFLUENT LINE TO LAGOON CONTROL BLD	NUT	GEAR OPERATOR, EXT. STEM, VALVE BOX AND COVER	
EQ-PV02	12	PLUG	MJ	EQ LAGOONS	SW EFFLUENT LINE TO LAGOON CONTROL BLD	NUT	GEAR OPERATOR, EXT. STEM, VALVE BOX AND COVER	
EQ-PV03	16	PLUG	MJ	EQ LAGOONS	SE LAGOON DRAIN LINE	NUT	GEAR OPERATOR, EXT. STEM, VALVE BOX AND COVER	
EQ-PV04	16	PLUG	MJ	EQ LAGOONS	SW LAGOON DRAIN LINE	NUT	GEAR OPERATOR, EXT. STEM, VALVE BOX AND COVER	
EQ-PV05	16	PLUG	MJ	EQ LAGOONS	NW LAGOON DRAIN LINE	NUT	GEAR OPERATOR, EXT. STEM, VALVE BOX AND COVER	
EQ-PV06	16	PLUG	MJ	EQ LAGOONS	NE LAGOON DRAIN LINE	NUT	GEAR OPERATOR, EXT. STEM, VALVE BOX AND COVER	
EQ-GV01	20	GATE	MJ	EQ LAGOONS	SE & SW LAGOON EQUALIZATION LINE	NUT	GEAR OPERATOR, EXT. STEM, VALVE BOX AND COVER	
EQ-GV02	20	GATE	MJ	EQ LAGOONS	SW & NW LAGOON EQUALIZATION LINE	NUT	GEAR OPERATOR, EXT. STEM, VALVE BOX AND COVER	
EQ-GV03	20	GATE	MJ	EQ LAGOONS	NW & NE LAGOON EQUALIZATION LINE	NUT	GEAR OPERATOR, EXT. STEM, VALVE BOX AND COVER	
EQ-GV04	20	GATE	MJ	EQ LAGOONS	SE & NE LAGOON EQUALIZATION LINE	NUT	GEAR OPERATOR, EXT. STEM, VALVE BOX AND COVER	
EQ-BV01	20	BUTTERFLY	FLANGE	EQ LAGOONS	SE AIR HEADER	HANDWHEEL	GEAR OPERATOR	
EQ-BV02	20	BUTTERFLY	FLANGE	EQ LAGOONS	SW AIR HEADER	HANDWHEEL	GEAR OPERATOR	
EQ-BV03	20	BUTTERFLY	FLANGE	EQ LAGOONS	NW AIR HEADER	ELECTRIC ACTUATOR	GEAR OPERATOR	
EQ-BV04	20	BUTTERFLY	FLANGE	EQ LAGOONS	NE AIR HEADER	ELECTRIC ACTUATOR	GEAR OPERATOR	
CR-CV01	14	CHECK	FLANGE	LAGOON CONTROL BUILDING	CONTROLLED RATE PUMP NO. 1 DISCHARGE	-		
CR-CV02	14	CHECK	FLANGE	LAGOON CONTROL BUILDING	CONTROLLED RATE PUMP NO. 2 DISCHARGE	-		
CR-PV01	14	PLUG	FLANGE	LAGOON CONTROL BUILDING	CONTROLLED RATE PUMP NO. 1 DISCHARGE	HANDWHEEL	CHAINWHEEL AND GEAR OPERATOR	
CR-PV02	14	PLUG	FLANGE	LAGOON CONTROL BUILDING	CONTROLLED RATE PUMP NO. 2 DISCHARGE	HANDWHEEL	CHAINWHEEL AND GEAR OPERATOR	
NEW CONTROLLED RATE PUMP STATION - AREA 5								
CR-CV03	18	CHECK	FLANGE	CONTROLLED RATE PUMP STATION	CONTROLLED RATE PUMP NO. 3 DISCHARGE	-		
CR-CV04	18	CHECK	FLANGE	CONTROLLED RATE PUMP STATION	CONTROLLED RATE PUMP NO. 4 DISCHARGE	-		
CR-PV03	18	PLUG	MJ	YARD	LAGOON EFFLUENT MAG METER	NUT	GEAR OPERATOR, EXT. STEM, VALVE BOX AND COVER	
CR-PV04	18	PLUG	FLANGE	CONTROLLED RATE PUMP STATION	CONTROLLED RATE PUMP NO. 3 DISCHARGE	HANDWHEEL	GEAR OPERATOR	
CR-PV05	18	PLUG	FLANGE	CONTROLLED RATE PUMP STATION	CONTROLLED RATE PUMP NO. 4 DISCHARGE	HANDWHEEL	GEAR OPERATOR	
CR-PV06	18	PLUG	MJ	YARD	CONTROLLED RATE EFFLUENT MAG METER	NUT	GEAR OPERATOR, EXT. STEM, VALVE BOX AND COVER	
NEW ANAEROBIC BASIN - AREA 6								
BNR-PV01	8	PLUG	MJ	ANAEROBIC BASIN	ANAEROBIC CELL NO.1 DRAIN LINE	NUT	GEAR OPERATOR, EXT. STEM, VALVE BOX AND COVER	
BNR-PV02	8	PLUG	MJ	ANAEROBIC BASIN	ANAEROBIC CELL NO.2 &3 DRAIN LINE	NUT	GEAR OPERATOR, EXT. STEM, VALVE BOX AND COVER	
BNR-PV03	8	PLUG	MJ	ANAEROBIC BASIN	ANAEROBIC CELL NO.4 DRAIN LINE	NUT	GEAR OPERATOR, EXT. STEM, VALVE BOX AND COVER	
BNR-PV04	8	PLUG	FLANGE	ANAEROBIC BASIN	ANAEROBIC BYPASS DRAIN LINE	HANDWHEEL	GEAR OPERATOR	
NEW BNR COMPLEX AND HOLDING BASINS - AREA 7								
BNR-BV01	16	BUTTERFLY	LUG	AERATION BULDING	AERATION BLOWER NO. 1 INTAKE	HANDWHEEL	GEAR OPERATOR	FURNISHED BY MANUFACTURER
BNR-BV02	16	BUTTERFLY	LUG	AERATION BULDING	AERATION BLOWER NO. 2 INTAKE	HANDWHEEL	GEAR OPERATOR	FURNISHED BY MANUFACTURER
BNR-CV01	12	CHECK	WAFER	AERATION BULDING	AERATION BLOWER NO. 1 DISCHARGE	-		FURNISHED BY MANUFACTURER
BNR-CV02	12	CHECK	WAFER	AERATION BULDING	AERATION BLOWER NO. 2 DISCHARGE	-		FURNISHED BY MANUFACTURER
BNR-BV03	12	BUTTERFLY	LUG	AERATION BULDING	AERATION BLOWER NO. 1 DISCHARGE	HANDWHEEL	CHAINWHEEL AND GEAR OPERATOR	FURNISHED BY MANUFACTURER
BNR-BV04	12	BUTTERFLY	LUG	AERATION BULDING	AERATION BLOWER NO. 2 DISCHARGE	HANDWHEEL	CHAINWHEEL AND GEAR OPERATOR	FURNISHED BY MANUFACTURER
BNR-PV01	20	PLUG	FLANGE	BNR COMPLEX	NORTH AERATION PASS NO. 1 & 2 AIR FLOW CONTROL	ELECTRIC ACTUATOR	GEAR OPERATOR	TYPE 3
BNR-PV02	20	PLUG	FLANGE	BNR COMPLEX	SOUTH AERATION PASS NO. 1 & 2 AIR FLOW CONTROL	ELECTRIC ACTUATOR	GEAR OPERATOR	TYPE 3
BNR-PV03	8	PLUG	FLANGE	BNR COMPLEX	NORTH AERATION PASS NO. 3 AIR FLOW CONTROL	ELECTRIC ACTUATOR	GEAR OPERATOR	TYPE 3
BNR-PV04	8	PLUG	FLANGE	BNR COMPLEX	SOUTH AERATION PASS NO. 3 AIR FLOW CONTROL	ELECTRIC ACTUATOR	GEAR OPERATOR	TYPE 3
BNR-BV05	4	BUTTERFLY	WAFER	BNR COMPLEX	NORTH AERATION PASS NO. 3 ZONE 1 AIR HEADER	LEVER		TYPE 2
BNR-BV06	4	BUTTERFLY	WAFER	BNR COMPLEX	SOUTH AERATION PASS NO. 3 ZONE 1 AIR HEADER	LEVER		TYPE 2
BNR-BV07	4	BUTTERFLY	WAFER	BNR COMPLEX	NORTH AERATION PASS NO. 3 ZONE 2 AIR HEADER	LEVER		TYPE 2
BNR-BV08	4	BUTTERFLY	WAFER	BNR COMPLEX	SOUTH AERATION PASS NO. 3 ZONE 2 AIR HEADER	LEVER		TYPE 2
BNR-MV01	8	MUD	FLANGE	BNR COMPLEX	NORTH AERATION PASS NO. 3 DRAIN LINE	NUT	EXT. STEM AND FLOOR STAND	
BNR-MV02	8	MUD	FLANGE	BNR COMPLEX	SOUTH AERATION PASS NO. 3 DRAIN LINE	NUT	EXT. STEM AND FLOOR STAND	
BNR-CV03	8	CHECK	FLANGE	AERATION BULDING	NORTH AERATION AND HOLDING BASIN DRAIN LINE	-		
BNR-CV04	8	CHECK	FLANGE	AERATION BULDING	SOUTH AERATION AND HOLDING BASIN DRAIN LINE			
BNR-VV01	4	VACUUM	FLANGE	RECYCLE PUMP STATION	IMLR PUMP NO.1	-		
BNR-VV02	4	VACUUM	FLANGE	RECYCLE PUMP STATION	IMLR PUMP NO.2	-		
WAS-PV04	6	PLUG	MJ	YARD	WAS HOLDING BASIN INFLUENT	NUT	EXT. STEM, VALVE BOX AND COVER	
WAS-PV05	6	PLUG	MJ	YARD	WAS HOLDING BASIN BYPASS	NUT	EXT. STEM, VALVE BOX AND COVER	
WAS-PV06	10	PLUG	FLANGE	AERATION BULDING	WAS TRANSFER PUMP NO.1 SUCTION	HANDWHEEL	GEAR OPERATOR	
WAS-PV07	10	PLUG	FLANGE	AERATION BULDING	WAS TRANSFER PUMP NO.2 SUCTION	HANDWHEEL	GEAR OPERATOR	
WAS-CV01	6	CHECK	FLANGE	AERATION BULDING	WAS TRANSFER PUMP NO.1 DISCHARGE	-		
WAS-CV02	6	CHECK	FLANGE	AERATION BULDING	WAS TRANSFER PUMP NO.2 DISCHARGE	-		
WAS-PV08	6	PLUG	FLANGE	AERATION BULDING	WAS TRANSFER PUMP NO.1 DISCHARGE	HANDWHEEL		
WAS-PV09	6	PLUG	FLANGE	AERATION BULDING	WAS TRANSFER PUMP NO.2 DISCHARGE	HANDWHEEL		
DS-PV02	6	PLUG	FLANGE	AERATION BULDING	CENTRIFUGE FEED PUMP SUCTION	HANDWHEEL		
DS-CV01	6	CHECK	FLANGE	AERATION BULDING	CENTRIFUGE FEED PUMP DISCHARGE	-		
DS-PV03	6	PLUG	FLANGE	AERATION BULDING	CENTRIFUGE FEED PUMP DISCHARGE	HANDWHEEL		
NEW SECONDARY CLARIFIERS - AREA 8								
SCM-PV01	6	PLUG	MJ	SECONDARY CLARIFIER	SECONDARY CLARIFIER NO.1 SCUM LINE	NUT	EXT. STEM, VALVE BOX AND COVER	
SCM-PV02	6	PLUG	MJ	SECONDARY CLARIFIER	SECONDARY CLARIFIER NO.2 SCUM LINE	NUT	EXT. STEM, VALVE BOX AND COVER	

VALVE SCHEDULE

NO.	SIZE	TYPE	FITTING	LOCATION	SERVICE	OPERATOR	ACCESSORIES	REMARKS
NEW SECONDARY CONTROL BUILDING - AREA 9								
RAS-PV01	14	PLUG	FLANGE	SECONDARY CONTROL BUILDING	SEC. CLARIFIER NO.1 RETURN SLUDGE LINE	ELECTRIC ACTUATOR	GEAR OPERATOR	
RAS-PV02	14	PLUG	FLANGE	SECONDARY CONTROL BUILDING	SEC. CLARIFIER NO.2 RETURN SLUDGE LINE	ELECTRIC ACTUATOR	GEAR OPERATOR	
RAS-PV03	14	PLUG	FLANGE	SECONDARY CONTROL BUILDING	RAS PUMP NO. 1 SUCTION	HANDWHEEL	GEAR OPERATOR	
RAS-PV04	14	PLUG	FLANGE	SECONDARY CONTROL BUILDING	RAS PUMP NO. 2 SUCTION	HANDWHEEL	GEAR OPERATOR	
RAS-PV05	14	PLUG	FLANGE	SECONDARY CONTROL BUILDING	RAS PUMP NO. 3 SUCTION	HANDWHEEL	GEAR OPERATOR	
RAS-CV01	14	CHECK	FLANGE	SECONDARY CONTROL BUILDING	RAS PUMP NO. 1 DISCHARGE	-		
RAS-CV02	14	CHECK	FLANGE	SECONDARY CONTROL BUILDING	RAS PUMP NO. 2 DISCHARGE	-		
RAS-CV03	14	CHECK	FLANGE	SECONDARY CONTROL BUILDING	RAS PUMP NO. 3 DISCHARGE	-		
RAS-PV06	14	PLUG	FLANGE	SECONDARY CONTROL BUILDING	RAS PUMP NO. 1 DISCHARGE	HANDWHEEL	GEAR OPERATOR	
RAS-PV07	14	PLUG	FLANGE	SECONDARY CONTROL BUILDING	RAS PUMP NO. 2 DISCHARGE	HANDWHEEL	GEAR OPERATOR	
RAS-PV08	14	PLUG	FLANGE	SECONDARY CONTROL BUILDING	RAS PUMP NO. 3 DISCHARGE	HANDWHEEL	GEAR OPERATOR	
RAS-PV09	20	PLUG	FLANGE	SECONDARY CONTROL BUILDING	RAS HEADER	HANDWHEEL	CHAINWHEEL AND GEAR OPERATOR	
RAS-PV10	20	PLUG	MJ	YARD	RAS MAG METER	NUT	GEAR OPERATOR, EXT. STEM, VALVE BOX AND COVER	
WAS-PV01	6	PLUG	FLANGE	SECONDARY CONTROL BUILDING	WAS HEADER	HANDWHEEL	CHAINWHEEL	
WAS-PV02	6	PLUG	FLANGE	SECONDARY CONTROL BUILDING	WAS FLOW CONTROL	ELECTRIC ACTUATOR		
WAS-PV03	6	PLUG	FLANGE	SECONDARY CONTROL BUILDING	WAS MAG METER	HANDWHEEL	CHAINWHEEL	
EXISTING FILTER BUILDING - AREA 10								
FIL-BV01	6	BUTTERFLY	FLANGE	FILTER BUILDING	AUTOMATIC NPW FILTER UPSTREAM	LEVER		
FIL-BV02	4	BUTTERFLY	FLANGE	FILTER BUILDING	MANUAL NPW FILTER UPSTREAM	LEVER		
FIL-BV03	6	BUTTERFLY	FLANGE	FILTER BUILDING	AUTOMATIC NPW FILTER DOWNSTREAM	LEVER		
FIL-BV04	4	BUTTERFLY	FLANGE	FILTER BUILDING	MANUAL NPW FILTER DOWNSTREAM	LEVER		
FIL-BV05	12	BUTTERFLY	FLANGE	FILTER BUILDING	FILTER NO. 3 INFLUENT LINE	HANDWHEEL	CHAINWHEEL AND GEAR OPERATOR	
FIL-BV06	12	BUTTERFLY	FLANGE	FILTER BUILDING	FILTER NO. 4 INFLUENT LINE	HANDWHEEL	CHAINWHEEL AND GEAR OPERATOR	
FIL-BV07	12	BUTTERFLY	FLANGE	FILTER BUILDING	FILTER NO. 5 INFLUENT LINE	HANDWHEEL	CHAINWHEEL AND GEAR OPERATOR	
FIL-BV08	12	BUTTERFLY	FLANGE	FILTER BUILDING	FILTER NO. 6 INFLUENT LINE	HANDWHEEL	CHAINWHEEL AND GEAR OPERATOR	
FIL-PV01	3	PLUG	FLANGE	FILTER BUILDING	FILTER NO. 1 EFFLUENT TO SUMP PUMP	NUT		
FIL-PV02	3	PLUG	FLANGE	FILTER BUILDING	FILTER NO. 2 EFFLUENT TO SUMP PUMP	NUT		
FIL-PV03	3	PLUG	FLANGE	FILTER BUILDING	FILTER NO. 7 EFFLUENT TO SUMP PUMP	NUT		
FIL-PV04	3	PLUG	FLANGE	FILTER BUILDING	FILTER NO. 8 EFFLUENT TO SUMP PUMP	NUT		
FIL-GV01	3	GATE	THREADED	FILTER BUILDING	BACKWASH PUMP NO. 1 EFFLUENT	HANDWHEEL		FURNISHED BY MANUFACTURER
FIL-BAV21	3	BALL	THREADED	FILTER BUILDING	BACKWASH PUMP NO. 1 EFFLUENT	LEVER		FURNISHED BY MANUFACTURER
FIL-BAV22	3	BALL	THREADED	FILTER BUILDING	BACKWASH PUMP NO. 1 RECIRCULATION	LEVER		FURNISHED BY MANUFACTURER
FIL-GV02	3	GATE	THREADED	FILTER BUILDING	BACKWASH PUMP NO. 2 EFFLUENT	HANDWHEEL		FURNISHED BY MANUFACTURER
FIL-BAV23	3	BALL	THREADED	FILTER BUILDING	BACKWASH PUMP NO. 2 EFFLUENT	LEVER		FURNISHED BY MANUFACTURER
FIL-BAV24	3	BALL	THREADED	FILTER BUILDING	BACKWASH PUMP NO. 2 RECIRCULATION	LEVER		FURNISHED BY MANUFACTURER
FIL-GV03	3	GATE	THREADED	FILTER BUILDING	BACKWASH PUMP NO. 3 EFFLUENT	HANDWHEEL		FURNISHED BY MANUFACTURER
FIL-BAV25	3	BALL	THREADED	FILTER BUILDING	BACKWASH PUMP NO. 3 EFFLUENT	LEVER		FURNISHED BY MANUFACTURER
FIL-BAV26	3	BALL	THREADED	FILTER BUILDING	BACKWASH PUMP NO. 3 RECIRCULATION	LEVER		FURNISHED BY MANUFACTURER
FIL-GV04	3	GATE	THREADED	FILTER BUILDING	BACKWASH PUMP NO. 4 EFFLUENT	HANDWHEEL		FURNISHED BY MANUFACTURER
FIL-BAV27	3	BALL	THREADED	FILTER BUILDING	BACKWASH PUMP NO. 4 EFFLUENT	LEVER		FURNISHED BY MANUFACTURER
FIL-BAV28	3	BALL	THREADED	FILTER BUILDING	BACKWASH PUMP NO. 4 RECIRCULATION	LEVER		FURNISHED BY MANUFACTURER
EXISTING ANAEROBIC DIGESTERS - AREA 12								
DIG-PV01	6	PLUG	FLANGE	ANAEROBIC DIGESTER	AN. DIGESTER NO. 1 TWAS FEED	ELECTRIC ACTUATOR		
DIG-PV02	6	PLUG	FLANGE	ANAEROBIC DIGESTER	AN. DIGESTER NO. 2 TWAS FEED	ELECTRIC ACTUATOR		
DIG-PV03	6	PLUG	FLANGE	ANAEROBIC DIGESTER	AN. DIGESTER NO. 1 RECIRC DISCHARGE	HANDWHEEL		
DIG-PV04	6	PLUG	FLANGE	ANAEROBIC DIGESTER	AN. DIGESTER NO. 1 RECIRC SUCTION	HANDWHEEL		
DIG-PV05	8	PLUG	FLANGE	ANAEROBIC DIGESTER	AN. DIGESTER NO. 1 DIGESTED SLUDGE WITHDRAWL	ELECTRIC ACTUATOR	GEAR OPERATOR	
DIG-PV06	8	PLUG	FLANGE	ANAEROBIC DIGESTER	AN. DIGESTER NO. 2 DIGESTED SLUDGE WITHDRAWL	ELECTRIC ACTUATOR	GEAR OPERATOR	
DIG-PV07	6	PLUG	FLANGE	ANAEROBIC DIGESTER	AN. DIGESTER NO. 1 OVERFLOW ISOLATION	HANDWHEEL	CHAINWHEEL	
DIG-PV08	6	PLUG	FLANGE	ANAEROBIC DIGESTER	AN. DIGESTER NO. 1 TO 2 TRANSFER	HANDWHEEL	CHAINWHEEL	
DIG-PV09	4	PLUG	FLANGE	ANAEROBIC DIGESTER	AN. DIGESTER NO. 1 LEVEL TRANSMITTER	NUT		
DIG-PV10	4	PLUG	FLANGE	ANAEROBIC DIGESTER	AN. DIGESTER NO. 2 LEVEL TRANSMITTER	NUT		
SPB-PV01	6	PLUG	FLANGE	SLUDGE PROCESS BUIDING	SLUDGE TRANSFER PUMP NO. 1 SUCTION	HANDWHEEL		
SPB-PV02	6	PLUG	FLANGE	SLUDGE PROCESS BUIDING	SLUDGE TRANSFER PUMP NO. 2 SUCTION	HANDWHEEL		
SPB-CV01	6	CHECK	FLANGE	SLUDGE PROCESS BUIDING	SLUDGE TRANSFER PUMP NO. 1 DISCHARGE	-		
SPB-CV02	6	CHECK	FLANGE	SLUDGE PROCESS BUIDING	SLUDGE TRANSFER PUMP NO. 2 DISCHARGE	-		
SPB-PV03	6	PLUG	FLANGE	SLUDGE PROCESS BUIDING	SLUDGE TRANSFER PUMP NO. 1 DISCHARGE	HANDWHEEL		
SPB-PV04	6	PLUG	FLANGE	SLUDGE PROCESS BUIDING	SLUDGE TRANSFER PUMP NO. 2 DISCHARGE	HANDWHEEL		
SPB-PV05	6	PLUG	FLANGE	SLUDGE PROCESS BUIDING	RECIRCULATION PUMP NO. 3 SUCTION	HANDWHEEL		
SPB-PV06	6	PLUG	FLANGE	SLUDGE PROCESS BUIDING	RECIRCULATION PUMP NO. 2 SUCTION	HANDWHEEL		
SPB-PV07	6	PLUG	FLANGE	SLUDGE PROCESS BUIDING	RECIRCULATION PUMP NO. 2 SUCTION	HANDWHEEL		
SPB-CV03	6	CHECK	FLANGE	SLUDGE PROCESS BUIDING	RECIRCULATION PUMP NO. 2 DISCHARGE	-		
SPB-PV08	6	PLUG	FLANGE	SLUDGE PROCESS BUIDING	RECIRCULATION PUMP NO. 2 DISCHARGE	HANDWHEEL		
SPB-PV09	6	PLUG	FLANGE	SLUDGE PROCESS BUIDING	RECIRCULATION PUMP NO. 2 ALT. DISCHARGE	HANDWHEEL	CHAINWHEEL	
SPB-PV10	6	PLUG	FLANGE	SLUDGE PROCESS BUIDING	RECIRCULATION PUMP NO. 3 ALT. DISCHARGE	HANDWHEEL	CHAINWHEEL	
SPB-PV11	6	PLUG	FLANGE	SLUDGE PROCESS BUIDING	RECIRCULATION PUMP NO. 3 DISCHARGE	HANDWHEEL	CHAINWHEEL	
SPB-PV12	6	PLUG	FLANGE	SLUDGE PROCESS BUIDING	RECIRCULATION PUMP NO. 2 ALT. DISCHARGE	HANDWHEEL		
SPB-PV13	6	PLUG	FLANGE	SLUDGE PROCESS BUIDING	RECIRCULATION PUMP NO. 2 DISCHARGE	HANDWHEEL		
SPB-PV14	6	PLUG	FLANGE	SLUDGE PROCESS BUIDING	BOILER HEX NO. 1 AND 2 INFLUENT HEADER ISOLATION	HANDWHEEL		
SPB-PV15	6	PLUG	FLANGE	SLUDGE PROCESS BUIDING	BOILER HEX NO. 2 INFLUENT	HANDWHEEL		
SPB-PV16	6	PLUG	FLANGE	SLUDGE PROCESS BUIDING	BOILER HEX NO. 2 BYPASS	HANDWHEEL		
SPB-PV17	4	PLUG	FLANGE	SLUDGE PROCESS BUIDING	BOILER HEX NO. 2 INFLUENT	NUT		
SPB-PV18	4	PLUG	FLANGE	SLUDGE PROCESS BUIDING	BOILER HEX NO. 2 EFFLUENT	NUT		
SPB-PV19	4	PLUG	FLANGE	SLUDGE PROCESS BUIDING	BOILER HEX NO. 1 GAS ISOLATION	HANDWHEEL	CHAINWHEEL	TYPE 2
DS-PV01	4	PLUG	MJ	YARD	DIGESTED SLUDGE TO DS HOLDING BASIN	NUT	EXT. STEM, VALVE BOX AND COVER	
WAS-PV13	6	PLUG	MJ	YARD	WAS TO SLUDGE PROCESS BUILDING	NUT	EXT. STEM, VALVE BOX AND COVER	
NEW THICKENING AND DEWATERING BUILDING - AREA 13								
WAS-PV14	6	PLUG	FLANGE	THICKENING AND DEWATERING BUILDING	RDT FEED LINE	HANDWHEEL		
WAS-PV15	6	PLUG	FLANGE	THICKENING AND DEWATERING BUILDING	RDT DRAIN LINE	HANDWHEEL		
WAS-PV16	8	PLUG	FLANGE	THICKENING AND DEWATERING BUILDING	TWAS PUMP SUCTION	HANDWHEEL	GEAR OPERATOR	
WAS-CV03	8	CHECK	FLANGE	THICKENING AND DEWATERING BUILDING	TWAS PUMP DISCHARGE	-		
WAS-PV17	8	PLUG	FLANGE	THICKENING AND DEWATERING BUILDING	TWAS PUMP DISCHARGE	HANDWHEEL	GEAR OPERATOR	
DS-PV04	6	PLUG	FLANGE	THICKENING AND DEWATERING BUILDING	CENTRIFUGE GRINDER	HANDWHEEL		
DS-PV05	6	PLUG	FLANGE	THICKENING AND DEWATERING BUILDING	CENTRIFUGE INFLUENT	HANDWHEEL		

NOTES:
1. THIS SCHEDULE LIST ONLY PROCESS VALVES 3" AND LARGER. THE SCHEDULE DOES NOT GUARANTEE THAT ALL VALVES HAVE BEEN INCLUDED, THAT ARE PART OF THIS PROJECT. THE CONTRACTOR SHALL PROVIDE ALL VALVES SHOWN ON THE DRAWINIGS WHETHER OR NOT THEY ARE SHOWN ON THE SCHEDULE.
2. ALL BUTTERFLY AND PLUG VALVES NOT INDICATED AS TYPE 2 ARE TYPE 1.

"For Viewing Purposes Only - Visit wesslerengineering.com to Purchase"

SCALE VERIFICATION	DRAWN BY	TWL
BAR IS ONE INCH LONG ON ORIGINAL DRAWING	CHECKED BY	DRI
	APPROVED BY	RWH
	ISSUE DATE	MARCH 2020
	PROJECT NUMBER	193216-04-001

NO.	DATE	INITIALS	REVISION DESCRIPTIONS

ROBERT W. HOLDER II REGISTERED No. 10000096 STATE OF INDIANA PROFESSIONAL ENGINEER 03/04/2020

WESSLER ENGINEERING
More than a Project™

WASTEWATER SYSTEM EXPANSION
CITY OF FRANKFORT, INDIANA
CONTRACT A - WASTEWATER TREATMENT PLANT

PROCESS VALVE SCHEDULE

SHEET NO. **16C1**

PAGE NO. 187

Drawing: J:\Frankfort\Projects\193216 Frankfort WWTP Exp\CAD 04-001\DWG\Sheets\Area 16 - MD\16C-MISC DTLS.dwg | Layout: 16C1 | Plotted: 02/28/20 @ 12:45:41 | LastSavedBy: JasonW

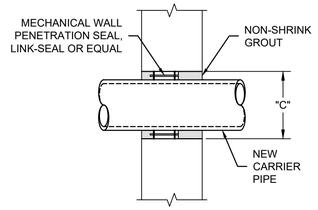

NOTES:
1. "S" DIMENSION FOR NEW PIPE THRU NEW WALL APPLICATION SHALL BE THE I.D. OF THE PIPE SLEEVE.
2. "C" DIMENSION FOR NEW PIPE THRU EXISTING WALL APPLICATION SHALL BE THE DIAMETER OF THE CORE DRILLED HOLE REQUIRED.
3. THE CONTRACTOR SHALL BE RESPONSIBLE FOR DETERMINING THE "S" OR "C" DIMENSION REQUIRED FOR THE SIZE OF CARRIER PIPE BEING INSTALLED.
4. ALL TYPE A WALL PIPE FASTENERS, STUDS, BOLTS, NUTS AND WASHERS, SHALL BE STAINLESS STEEL.

NEW PIPE THROUGH EXISTING WALL
SCALE: NONE

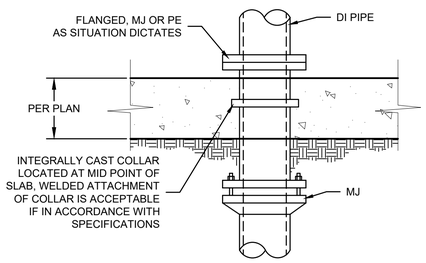

NEW PIPE THROUGH NEW BELOW GRADE SLAB
SCALE: NONE

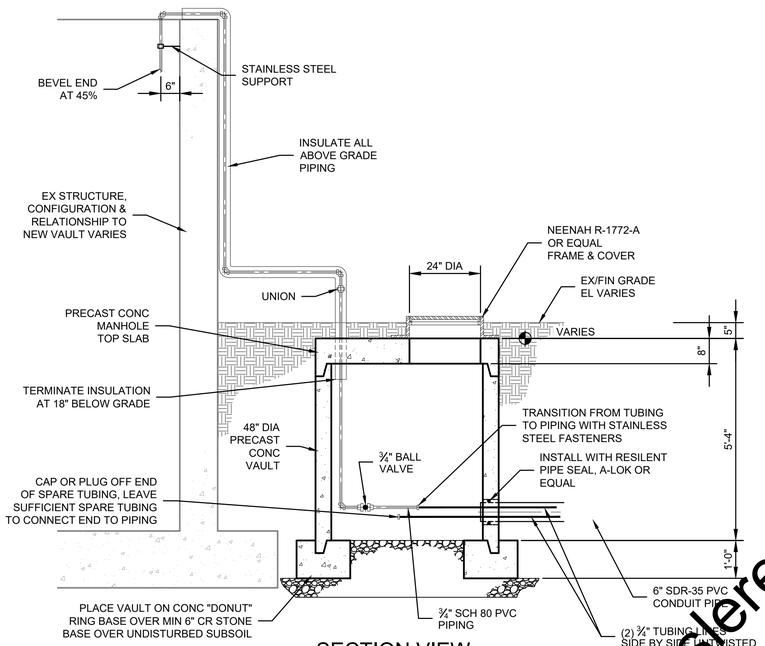

SECTION VIEW

NEW CHEMICAL FEED LINE PULL BOX AND INJECTION DETAIL
SCALE: 1/2" = 1'-0"

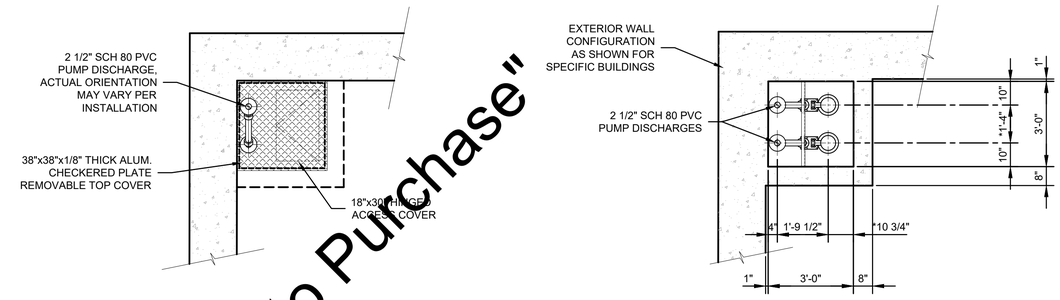

UPPER PLAN VIEW

LOWER PLAN VIEW

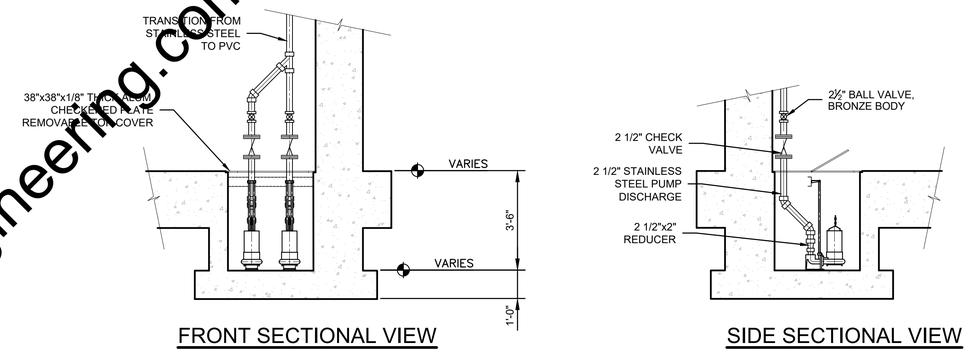

FRONT SECTIONAL VIEW

SIDE SECTIONAL VIEW

BUILDING SUMP PUMP INSTALLATION DETAILS
SCALE: 3/8" = 1'-0"

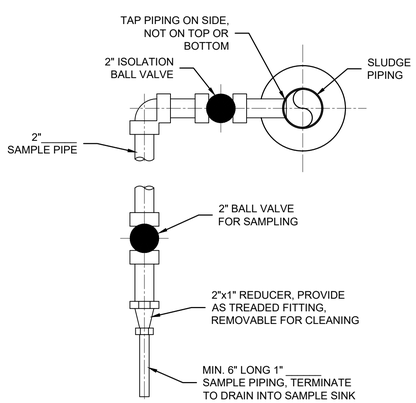

SAMPLE TAP INSTALLATION DETAILS
SCALE: NONE

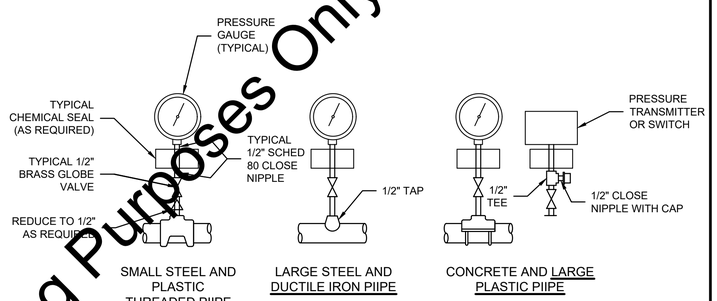

PIPE MOUNTED PRESSURE SWITCHES, TRANSMITTERS AND GAUGES WITH OR WITHOUT CHEMICAL SEAL TYPICAL INSTALLATION
SCALE: NONE

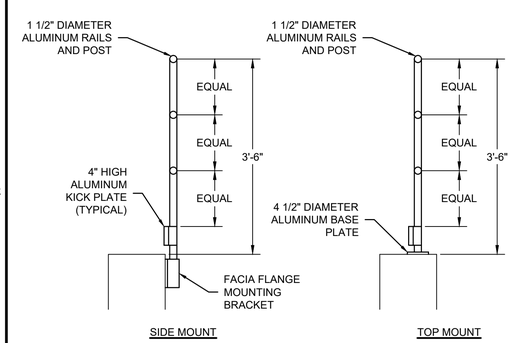

NOTES:
1. MOUNT HANDRAIL ON TOP OR SIDE AS INDICATED ON THE PLANS. MOUNT WITH STAINLESS STEEL EXPANSION ANCHORS, SIZED AS RECOMMNEDED BY THE HANDRAIL MANUFACTURER.
2. TOP MOUNTED HANDRAIL SHOWN AS OFFSET ON PLANS, SHOULD BE OFFSET FROM WALL EDGE AS DIMENSIONED IN THIS DETAIL. CENTER ALL OTHER TOP MOUNTED HANDRAIL.

3-RAIL HANDRAIL
SCALE: NONE

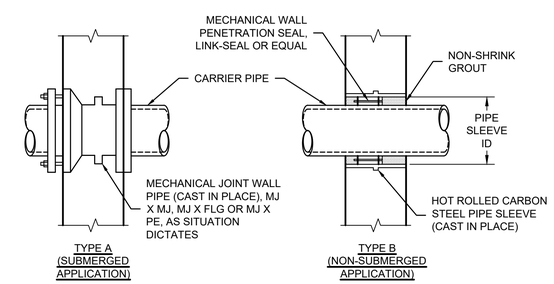

NEW PIPE THROUGH NEW WALL
SCALE: NONE

SCALE VERIFICATION	DRAWN BY	TWL
BAR IS ONE INCH LONG ON ORIGINAL DRAWING	CHECKED BY	DRI
	APPROVED BY	RWH
	ISSUE DATE	MARCH 2020
	PROJECT NUMBER	193216-04-001

NO.	DATE	INITIALS	REVISION DESCRIPTIONS

ROBERT W. HOLDEN, JR. REGISTERED No. 10000096 STATE OF INDIANA PROFESSIONAL ENGINEER 03/04/2020

WESSLER ENGINEERING
More than a Project™

WASTEWATER SYSTEM EXPANSION
CITY OF FRANKFORT, INDIANA
CONTRACT A - WASTEWATER TREATMENT PLANT

MISCELLANEOUS DETAILS

SHEET NO. **16C2**

PAGE NO. 188

"For Viewing Purposes Only - Visit wesslerengineering.com to Purchase"

Drawing: J:\Frankfort\Projects\193216 Frankfort WWTP Exp\CAD 04-001\DWG\Sheets\Area 16 - MD\16C-MISC DTLS.dwg | Layout: 16C2 | Plotted: 03/04/20 @ 04:27:47 | LastSavedBy: MikeN

SPARE PIPE SPOOLS FOR FIELD INSTRUMENT REMOVAL			
INSTRUMENT TYPE	SERVICE	PIPE SIZE	PIPE MATERIAL
MAG METER	DIGESTER NO.1 SLUDGE RECIRCULATION	4"	D.I.
	DIGESTER NO.2 SLUDGE RECIRCULATION		
GAS FLOW METER	DIGESTER NO.1 GAS DISCHARGE LINE	4"	S.S.
	DIGESTER NO.2 GAS DISCHARGE LINE		
MAG METER	WAS TRANSFER METER- AERATION BUILDING	6"	D.I.
	WAS METER- SECONDARY CONTROL BUILDING		
	DIGESTED SLUDGE TRANSFER PUMP BYPASS		
	DIGESTED SLUDGE TRANSFER PUMP DISCHARGE		
	CENTRIFUGE METER		
MAG METER	TWAS METER	8"	D.I.
MAG METER	SECONDARY CLARIFIER NO.1 RAS DRAWOFF	14"	D.I.
MAG METER	LAGOON CONTROL METER	18"	D.I.
	CONTROLLED RATE METER		
MAG METER	RAS METER	20"	D.I.

NOTES:
1. PROVIDE A SPARE PIPE SPOOL FOR EACH SIZE AND MATERIAL INDICATED IN THE TABLE ABOVE FOR INSERTION INTO THE PIPING SHOULD THE FIELD INSTRUMENT LISTED NEED TO BE REMOVED FROM THE PIPING. PIPE SPOOLS SHALL BE THE SAME LAY LENGTH AS THE INSTRUMENT TYPE LISTED AND BE FLANGED x PE WITH UNI-FLANGE.

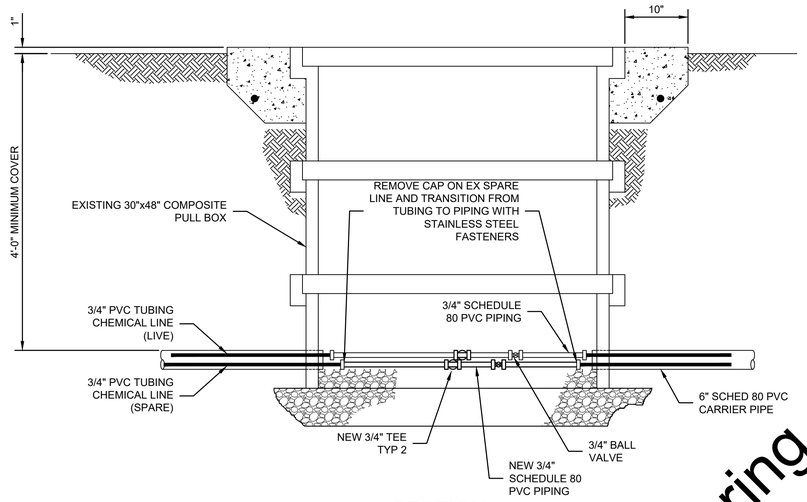

SECTION

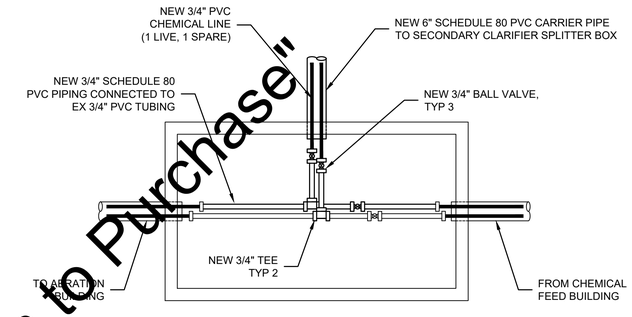

PLAN

NOTES:
1. THIS DETAIL SHOWS A TYPICAL PULL BOX INSTALLATION. ADDITIONAL PVC FITTINGS MAY BE REQUIRED, DEPENDING ON SPECIFIC INSTALLATION CONDITIONS. ALL BRANCHES OFF OF ANY TEE INSTALLATION TO BE INSTALLED WITH BALL VALVE.
2. INSTALL THE TWO (2) NEW 3/4" PVC TUBING LINES TO THE SECONDARY SPLITTER STRUCTURE SIDE BY SIDE IN THE 6" SCHEDULE 80 PVC CONDUIT, UNTWISTED.

EXISTING CHEMICAL LINE PULL BOX MODIFICATION DETAIL

SCALE: NONE

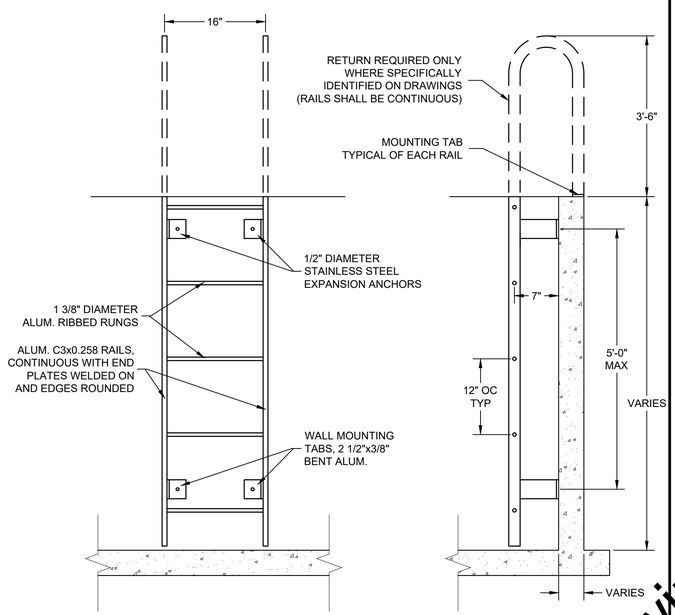

FRONT VIEW

SIDE VIEW

TYPICAL LADDER DETAIL

SCALE: NONE

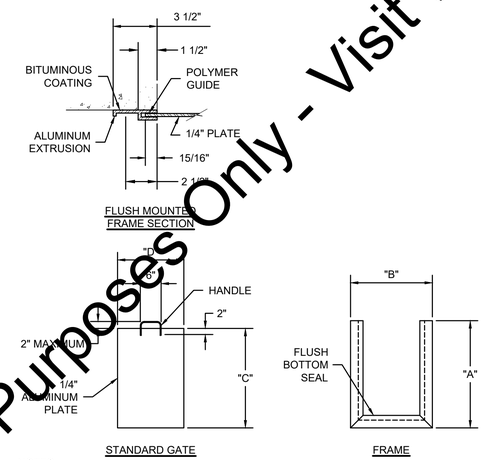

FLUSH MOUNTED FRAME SECTION

STANDARD GATE

FRAME

NOTES:
1. REFERENCED DIMENSIONS ARE INCLUDED IN THE STOP GATE SCHEDULE AS PART OF SPECIFICATION SECTION 11292.
2. DIMENSION "A" IS FOR THE HIGHEST WALL AT A STOP GATE LOCATION. SAW CUT AND GRIND FRAME SMOOTH AT SHORTER WALL AS REQUIRED IF WALL HEIGHTS DIFFER.

STOP GATE DETAIL

SCALE: NONE

"For Viewing Purposes Only - Visit wesslerengineering.com to Purchase"

SCALE VERIFICATION	DRAWN BY	TWL
BAR IS ONE INCH LONG ON ORIGINAL DRAWING	CHECKED BY	DRT
	APPROVED BY	RWH
	ISSUE DATE	MARCH 2020
	PROJECT NUMBER	193216-04-001

NO.	DATE	INITIALS	REVISION DESCRIPTIONS

ROBERT W. HOLDEN, II REGISTERED No. 10000096 STATE OF INDIANA PROFESSIONAL ENGINEER 03/04/2020

WESSLER ENGINEERING
More than a Project™

WASTEWATER SYSTEM EXPANSION
CITY OF FRANKFORT, INDIANA
CONTRACT A - WASTEWATER TREATMENT PLANT

MISCELLANEOUS DETAILS

SHEET NO. **16C3**

PAGE NO. 189

Drawing: J:\Frankfort\Projects\193216 Frankfort WWTP Exp\CAD 04-001\DWG\Sheets\Area 16 - MD\16C-MISC DTLS.dwg | Layout: 16C3 MISCELLANEOUS DETAILS | Plotted: 02/28/20 @ 12:45:49 | LastSavedBy: JasonW

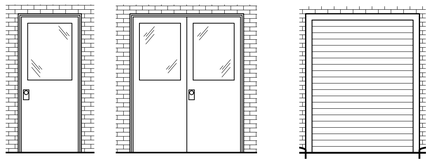

ELEVATION 1 ELEVATION 2 ELEVATION 3

DOOR ELEVATIONS
NO SCALE

DOOR SCHEDULE

MARK	LOCATION	WIDTH	HEIGHT	THICKNESS	DOOR MATERIAL	FRAME MATERIAL	GLAZING	DOOR ELEVATION	DOOR DETAIL	HARDWARE	QTY
A1	SECONDARY CONTROL BUILDING	3'-0"	7-2"	1.75"	ALUMINUM	ALUMINUM	24" x 34"	1	1	E1	1
A2	SECONDARY CONTROL BUILDING	5-8"	7-2"	1.75"	ALUMINUM	ALUMINUM	22" x 34"	2	1	E2	1
B1	THICKENING AND DEWATERING BUILDING	3'-0"	7-2"	1.75"	ALUMINUM	ALUMINUM	24" x 34"	1	1	E1	2
B2	THICKENING AND DEWATERING BUILDING	3'-0"	7-2"	1.75"	ALUMINUM	ALUMINUM	24" x 34"	1	2	E1	1
B3	THICKENING AND DEWATERING BUILDING	3'-0"	7-2"	1.75"	ALUMINUM	ALUMINUM	22" x 34"	1	2	E3	2
B4	THICKENING AND DEWATERING BUILDING	5-8"	7-2"	1.75"	ALUMINUM	ALUMINUM	24" x 34"	2	1	E2	1
B5	THICKENING AND DEWATERING BUILDING	10'-0"	10'-0"	0.40"	ALUMINUM	ALUMINUM	-	3	3	-	2
B6	THICKENING AND DEWATERING BUILDING	14'-0"	14'-0"	0.40"	ALUMINUM	ALUMINUM	-	3	3	-	2

NOTES:
1. SEE SPECIFICATION SECTION 08710 FOR HARDWARE DESCRIPTIONS.
2. SEE SPECIFICATION 08800 FOR GLAZING REQUIREMENTS.
3. ALL DOORS ARE TO BE KEYED ALIKE. COORDINATE WITH OWNER TO MATCH EXISTING KEY SYSTEM.

WINDOW SCHEDULE

MARK	LOCATION	WIDTH	HEIGHT	FRAME MATERIAL	WINDOW ELEVATION	WINDOW DETAIL	STYLE	QUANTITY
A1	THICKENING AND DEWATERING BUILDING	4'-0"	4'-0"	ALUMINUM	1	1	FIXED	2
A2	THICKENING AND DEWATERING BUILDING	12'-0"	10'-0"	ALUMINUM	2	2	FIXED	2
B1	ADMINISTRATIVE BUIDING	6'-0"	6'-0"	ALUMINUM	1	3	FIXED	1

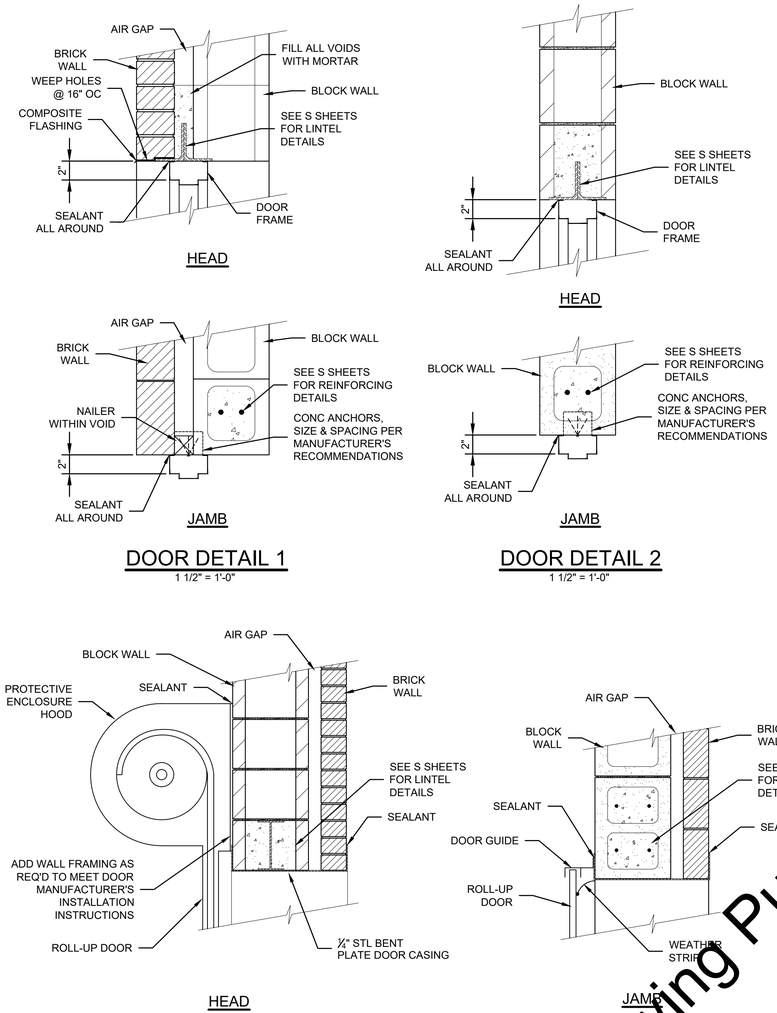

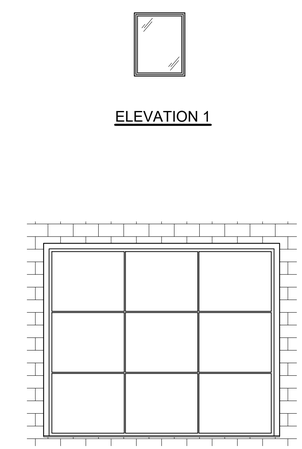

ELEVATION 1

ELEVATION 2

DOOR ELEVATIONS
NO SCALE

"For Viewing Purposes Only - Visit wesslerengineering.com to Purchase"

SCALE VERIFICATION	DRAWN BY	TWL
BAR IS ONE INCH LONG ON ORIGINAL DRAWING	CHECKED BY	DRT
	APPROVED BY	RWH
	ISSUE DATE	MARCH 2020
	PROJECT NUMBER	193216-04-001

NO.	DATE	INITIALS	REVISION DESCRIPTIONS

ROBERT W. HOLDEN, JR. REGISTERED No. 10000096 STATE OF INDIANA PROFESSIONAL ENGINEER 03/04/2020

WESSLER ENGINEERING
More than a Project™

WASTEWATER SYSTEM EXPANSION
CITY OF FRANKFORT, INDIANA
CONTRACT A - WASTEWATER TREATMENT PLANT

DOOR AND WINDOW SCHEDULE AND DETAILS

SHEET NO. **16C4**

PAGE NO. 190

Drawing: J:\FrankfortProjects\193216 Frankfort WWTP Exp\CAD 04-001\DWG\Sheets\Area 16 - MD\16C-MISC DTLS.dwg | Layout: 16C4 | Plotted: 02/28/20 @ 12:45:51 | LastSavedBy: JasonW

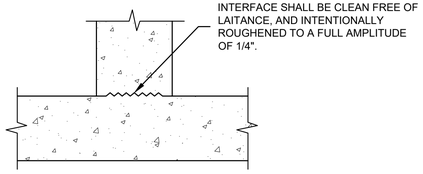

ROUGHENED JOINT DETAIL (1 / 16S1)

SCALE: 1 1/2" = 1'-0"

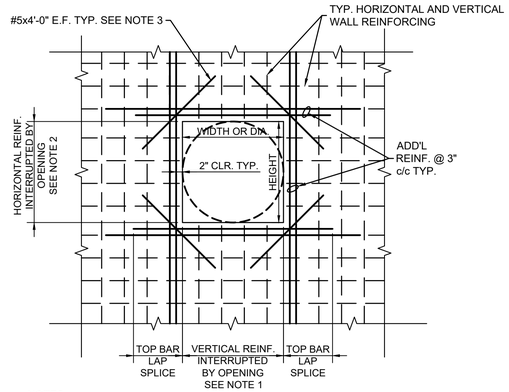

NOTES:

1. PROVIDE HALF THE VERTICAL REINF. INTERRUPTED BY OPENING ON EA. SIDE OF OPENING. DOWEL TO FOUNDATION AND EXTEND TO TOP OF WALL. (TYP. FOR E.F.)
2. PROVIDE HALF THE HORIZONTAL REINF. INTERRUPTED BY OPENING ON TOP AND BOTTOM OF OPENING. (TYP. FOR E.F.)
3. FOR CIRCULAR OPENINGS, DIAGONAL BARS ARE TO BE LOCATED 2" CLEAR OF OPENING.

CONCRETE WALL OPENING DETAIL (2 / 16S1)

SCALE: 1/2" = 1'-0"

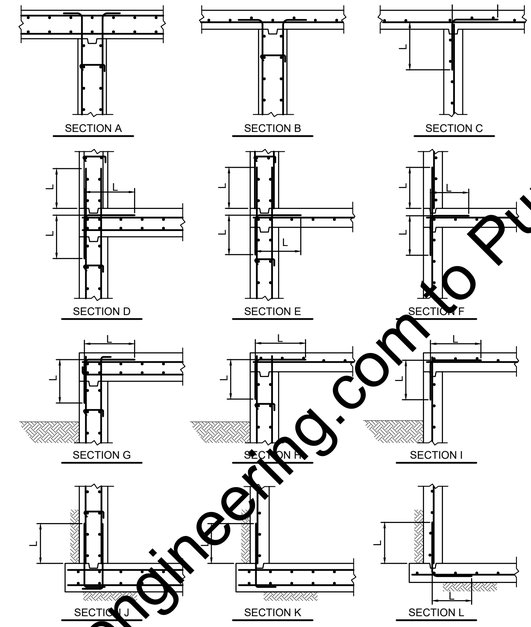

NOTE:

1. L = TENSION LAP SPLICE - SEE CONCRETE REINFORCING TENSION LAP TABLE.
2. FOR WALLS WITH TWO MATS OF REINF. PROVIDE #3 WALL TIES AT TOP OF WALL AND @ 4'-0" c/c MAX. HORIZONTAL & VERTICAL.
3. WATERSTOPS ARE REQUIRED FOR WALLS/SLABS & BASEMENT WALLS/FOUNDATIONS THAT RETAIN FLUID.

CONCRETE WALL REINFORCING DETAIL (3 / 16S1)

SCALE: NONE

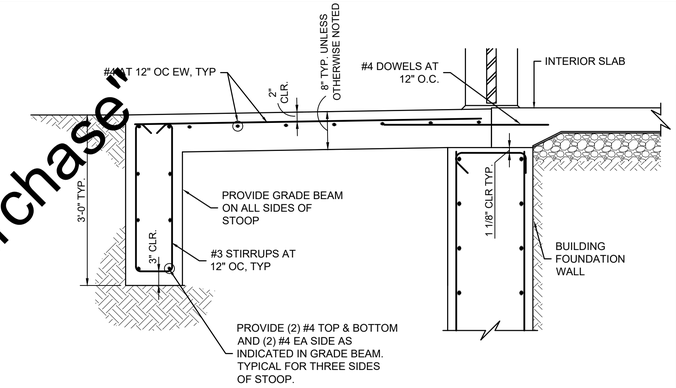

CONCRETE STOOP DETAIL (4 / 16S1)

SCALE: 3/4" = 1'-0"

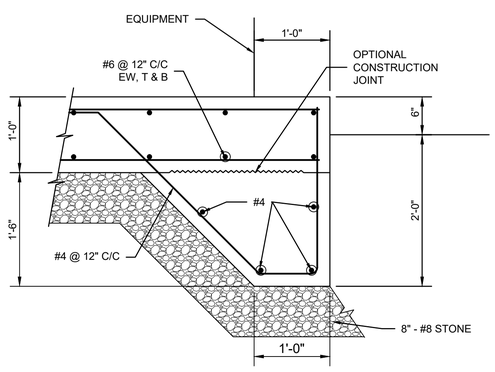

EXTERIOR EQUIPMENT FOUNDATION DETAIL (5 / 16S1)

SCALE: 1" = 1'-0"

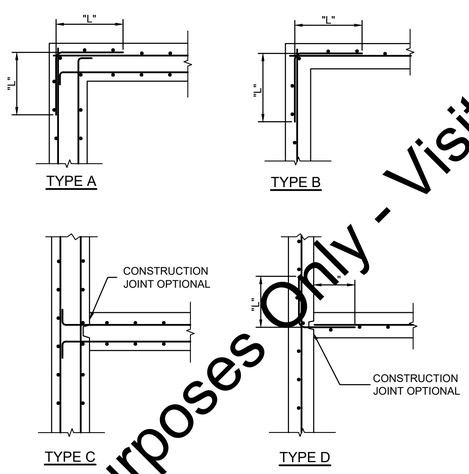

NOTE:

1. L = TENSION LAP SPLICE - SEE CONCRETE REINFORCING TENSION LAP TABLE.
2. WATERSTOPS ARE REQUIRED FOR WALLS AND SLABS THAT RETAIN FLUID.

HORIZONTAL REINFORCING CORNER DETAIL (6 / 16S1)

SCALE: 1/2" = 1'-0"

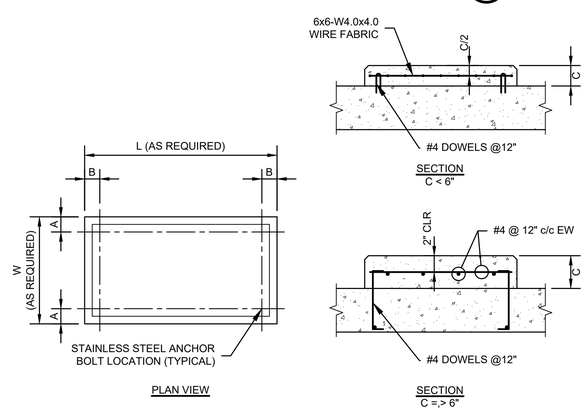

NOTE:

1. DIMENSIONS 'A' & 'B' SHALL BE AS REQ'D BY THE EQUIPMENT, BUT NOT LESS THAN 6". EQUIPMENT PAD HEIGHT SHALL BE AS SHOWN ON THE PLANS OR AS REQUIRED TO SET THE EQUIPEMENT AT THE REQUIRED ELEVATION, BUT NOT LESS THAN 4".

INTERIOR EQUIPMENT BASE DETAIL (7 / 16S1)

SCALE: 1" = 1'-0"

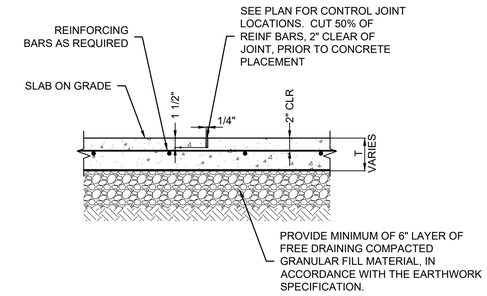

NOTES:

1. LAYOUT CONTROL JOINT LOCATIONS BEFORE SLAB CONSTRUCTION AND DISCONTINUE ALTERNATE SLAB REINFORCING BARS AT JOINTS.
2. COORDINATE SAWCUT DEPTH WITH LOCATION OF TOP REINFORCING STEEL TO ENSURE THAT CONTINUOUS BARS ARE NOT SAWCUT.
3. SAWCUT JOINT AS SOON AS POSSIBLE AFTER THE CONCRETE HARDENS. THE CONCRETE IS HARD ENOUGH WHEN THE BLADE DOES NOT DISLODGE AGGREGATE, AND WHEN THE EDGES OF THE CUT TO NOT RAVEL. COMPLETE SAWCUTTING BEFORE SHRINKAGE STRESSES BECOME SUFFICIENT TO PRODUCE CRACKING.
4. PREPARE AND SEAL JOINT AS SPECIFIED.
5. CONSTRUCTION JOINTS SHALL BE LOCATED AT DEFINED CONTROL JOINT LOCATIONS. CONTINUOUS BARS SHALL BE DETAILED AS REQUIRED TO RUN THROUGH THE CONSTRUCTION JOINTS.

REINFORCED SLAB ON GRADE DETAIL (8 / 16S1)

SCALE: 1" = 1'-0"

SCALE VERIFICATION	DRAWN BY	TWL
BAR IS ONE INCH LONG ON ORIGINAL DRAWING	CHECKED BY	JRB
	APPROVED BY	JRB
	ISSUE DATE	MARCH 2020
	PROJECT NUMBER	193216-04-001

NO.	DATE	INITIALS	REVISION DESCRIPTIONS

JEFFREY ROSS BALLARD REGISTERED No. 60860191 STATE OF INDIANA PROFESSIONAL ENGINEER 03/04/2020

WESSLER ENGINEERING
More than a Project™

WASTEWATER SYSTEM EXPANSION

CITY OF FRANKFORT, INDIANA
CONTRACT A - WASTEWATER TREATMENT PLANT

TYPICAL STRUCTURAL DETAILS

SHEET NO. **16S1**

PAGE NO. 191

Drawing: J:\Frankfort\Projects\193216 Frankfort WWTP Exp\CAD 04-001\DWG\Sheets\Area 16 - MD\16S-STR DTLS.dwg | Layout: 1 | Plotted: 02/28/20 @ 12:46:14 | LastSavedBy: TravisL

"For Viewing Purposes Only - Visit wesslerengineering.com to Purchase"

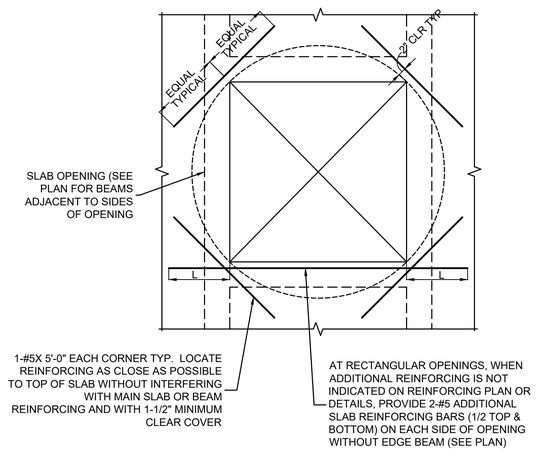

SLAB OPENING REINFORCING DETAIL (9 / 16S2)

SCALE: 1 1/2" = 1'-0"

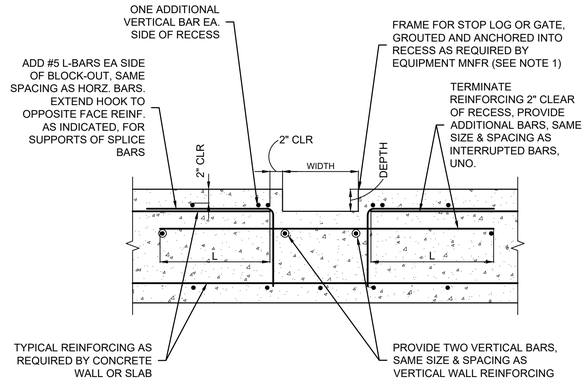

NOTES:

1. DETAIL APPLIES TO LINEAR WALL OR SLAB RECESS WITH DEPTH LESS THAN 4" AND WIDTH LESS THAN 18". COORDINATE WITH ENGINEER PRIOR TO CONCRETE CONSTRUCTION IF REQUIRED RECESS DEPTH EXCEEDS DETAIL LIMITS.
2. ADDITIONAL REINFORCING INDICATED SHALL BE SUPPORTED AS REQUIRED TO PREVENT DISPLACEMENT DURING CONCRETE PLACEMENT. SEE CONCRETE REINFORCING TENSION LAP SPLICE TABLE FOR LAP LENGTHS.

SLAB OR WALL RECESS DETAIL (10 / 16S2)

SCALE: 1 1/2" = 1'-0"

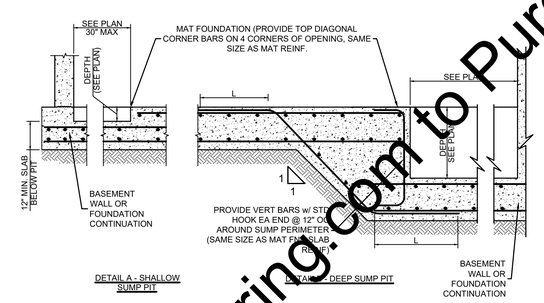

SUMP PIT DETAIL (11 / 16S2)

SCALE: 3/8" = 1'-0"

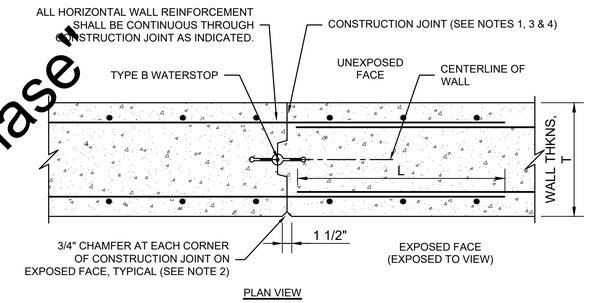

PLAN VIEW

NOTES:

1. CONSTRUCTION JOINT LOCATIONS SHALL BE SUBMITTED TO THE ENGINEER FOR REVIEW PRIOR TO THE START OF CONCRETE CONSTRUCTION. CONTRACTOR SHALL LOCATE CONSTRUCTION JOINTS AT CONTROL JOINT LOCATIONS WHEN CONTROL JOINTS ARE PROVIDED.
2. AT WALLS WITH TWO EXPOSED FACES, PROVIDE REMOVABLE BEVELED WOOD STRIP ON BOTH SIDES OF WALL.
3. EXTEND CONSTRUCTION JOINT FROM TOP OF FOOTING TO TOP OF WALL UNLESS OTHERWISE INDICATED.
4. WATERSTOPPED JOINTS ARE REQUIRED FOR ALL BASEMENT WALLS AND WALLS THAT RETAIN FLUID. SEE TYPICAL WATERPROOF CONSTRUCTION JOINT DETAILS.

VERTICAL WALL CONSTRUCTION JOINT DETAIL (12 / 16S2)

SCALE: 1" = 1'-0"

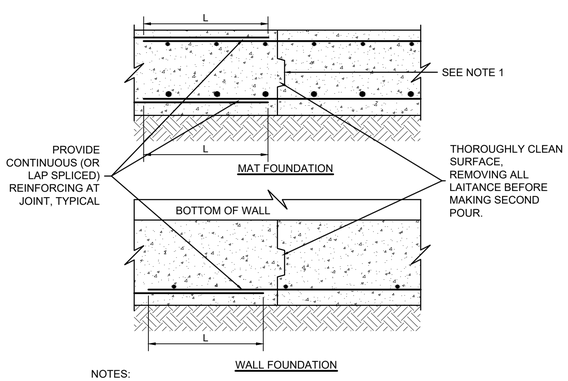

NOTES:

1. WATERSTOPPED JOINTS ARE REQUIRED FOR MAT FOUNDATIONS.

WALL AND MAT FOUNDATION CONSTRUCTION JOINT DETAIL (13 / 16S2)

SCALE: 3/4" = 1'-0"

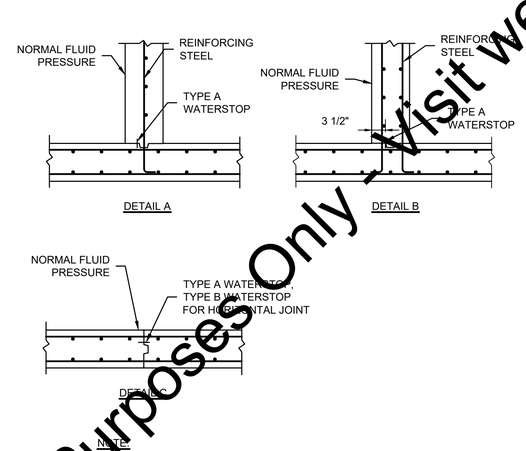

NOTE:

1. DETAILS APPLY FOR HORIZONTAL OR VERTICAL JOINTS.

WATERSTOP CONSTRUCTION JOINT DETAIL (14 / 16S2)

SCALE: 3/4" = 1'-0"

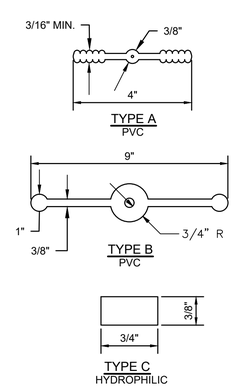

WATERSTOP TYPES (15 / 16S2)

SCALE: NONE

"For Viewing Purposes Only - Visit wesslerengineering.com to Purchase"

SCALE VERIFICATION	DRAWN BY	TWL
BAR IS ONE INCH LONG ON ORIGINAL DRAWING	CHECKED BY	JRB
	APPROVED BY	JRB
	ISSUE DATE	MARCH 2020
	PROJECT NUMBER	193216-04-001

NO.	DATE	INITIALS	REVISION DESCRIPTIONS

JEFFREY ROSS BALLARD REGISTERED No. 60860191 STATE OF INDIANA PROFESSIONAL ENGINEER 03/04/2020

WESSLER ENGINEERING
More than a Project™

WASTEWATER SYSTEM EXPANSION
CITY OF FRANKFORT, INDIANA
CONTRACT A - WASTEWATER TREATMENT PLANT

TYPICAL STRUCTURAL DETAILS

SHEET NO. **16S2**

PAGE NO. 192

Drawing: J:\FrankfortProjects\193216 Frankfort WWTP Exp\CAD 04-001\DWG\Sheets\Area 16 - MD\16S-STR DTLS.dwg | Layout: 2 | Plotted: 02/28/20 @ 12:46:15 | LastSavedBy: TravsL

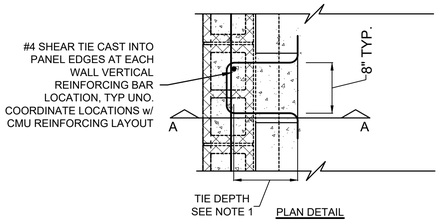

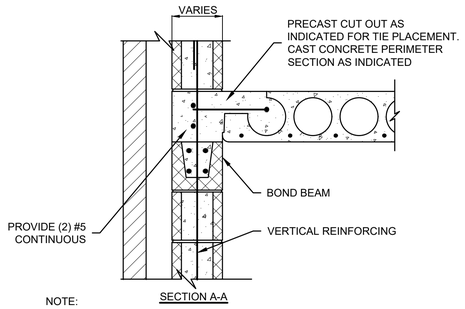

NOTE:

1. TIE DEPTH SHALL BE DETERMINED BY THE PRECAST MANUFACTURER BASED ON THE HOLLOW-CORE DIMENSIONS AND DISTANCE FROM PRECAST TO CENTERLINE OF WALL

PRECAST EDGE AT CMU WALL DETAIL (16 / 16S3)

SCALE: 1" = 1'-0"

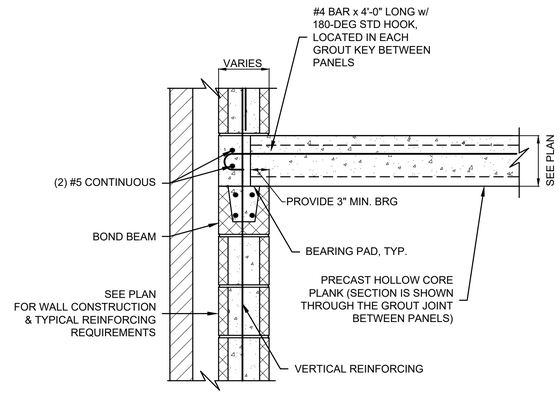

PRECAST END BEARING ON CMU DETAIL (17 / 16S3)

SCALE: 1" = 1'-0"

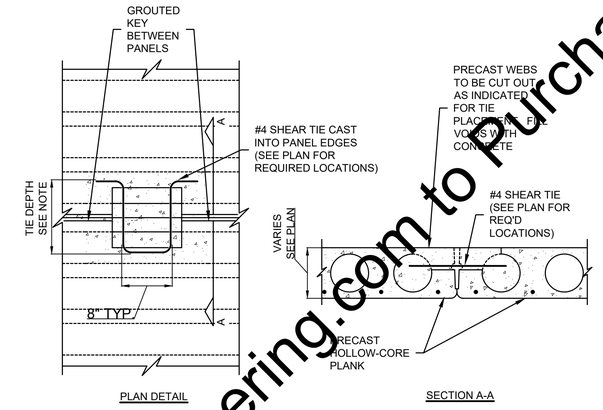

NOTE:

1. TIE DEPTH SHALL BE DETERMINED BY THE PRECAST MANUFACTURER BASED ON THE HOLLOW-CORE DIMENSIONS

PRECAST HOLLOW CORE CONNECTION DETAIL (18 / 16S3)

SCALE: 1" = 1'-0"

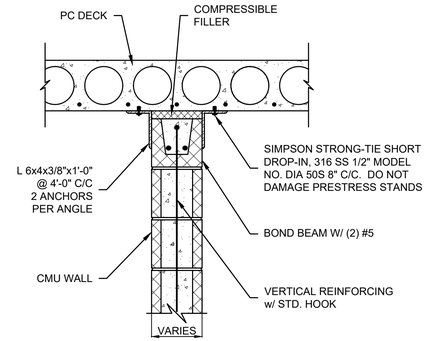

INTERIOR PARTITION TO PC DECK DETAIL (19 / 16S3)

SCALE: 1" = 1'-0"

"For Viewing Purposes Only - Visit wesslerengineering.com to Purchase"

SCALE VERIFICATION	DRAWN BY	TWL
BAR IS ONE INCH LONG ON ORIGINAL DRAWING	CHECKED BY	JRB
	APPROVED BY	JRB
	ISSUE DATE	MARCH 2020
	PROJECT NUMBER	193216-04-001

NO.	DATE	INITIALS	REVISION DESCRIPTIONS

JEFFREY ROSS BALLARD REGISTERED No. 60860191 STATE OF INDIANA PROFESSIONAL ENGINEER 03/04/2020

WESSLER ENGINEERING
More than a Project™

WASTEWATER SYSTEM EXPANSION

CITY OF FRANKFORT, INDIANA
CONTRACT A - WASTEWATER TREATMENT PLANT

TYPICAL STRUCTURAL DETAILS

SHEET NO. **16S3**

PAGE NO. 193

Drawing: J:\FrankfortProjects\193216 Frankfort WWTP Exp\CAD 04-001DWG\Sheets\Area 16 - MD\16S-STR DTLS.dwg | Layout: 3 | Plotted: 02/28/20 @ 12:46:16 | LastSavedBy: TravisL

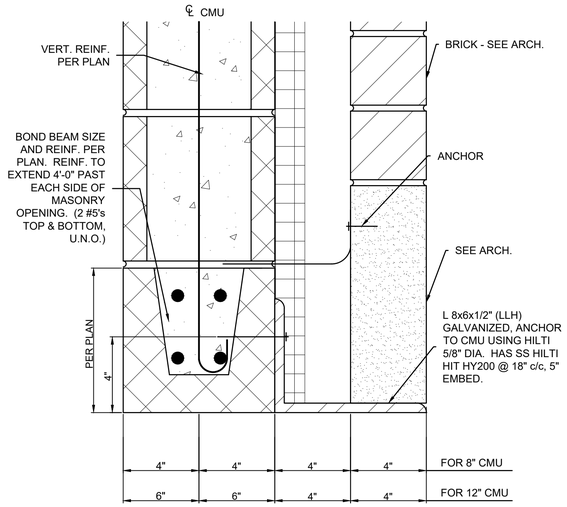

BOND BEAM LINTEL DETAIL 20/16S4

SCALE: 3" = 1'-0"

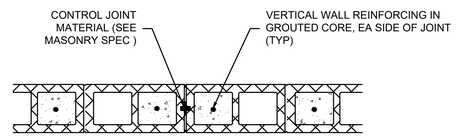

CMU CONTROL JOINT DETAIL 21/16S4

SCALE: 1" = 1'-0"

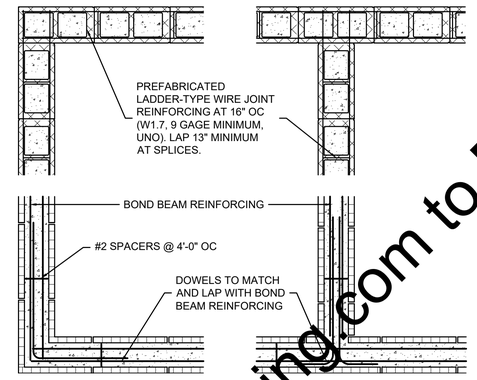

NOTE:
1. PROVIDE MASONRY WALL REINFORCING TENSION LAP SPLICE FOR ALL BOND BEAM REINFORCING.

CMU WALL HORIZONTAL REINFORCING DETAIL 22/16S4

SCALE: 3/4" = 1'-0"

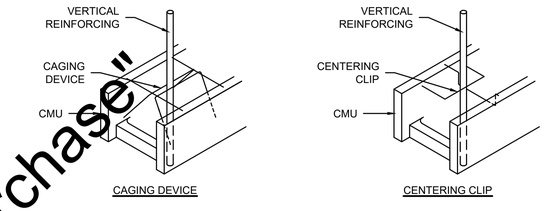

TYPICAL VERTICAL REINFORCING

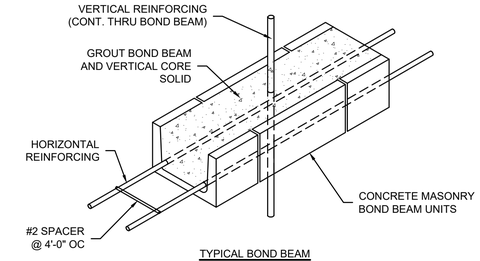

TYPICAL BOND BEAM

NOTE:
1. CAGING DEVICES AND CENTERING CLIPS SHALL BE FORMED FROM #9 HARD WIRE, SPOT WELDED AND GALVANIZED.

CMU WALL REINFORCING DETAIL 23/16S4

SCALE: 1" = 1'-0"

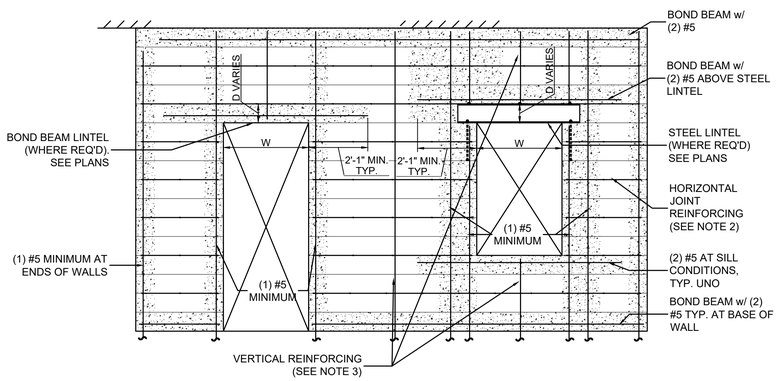

STRUCTURAL MASONRY WALL NOTES:

1. DETAIL APPLIES TO ALL STRUCTURAL CMU WALLS.
2. HORIZONTAL JOINT REINFORCING: PROVIDE W1.7 (9 GAGE) GALVANIZED LADDER-TYPE HORIZONTAL JOINT REINFORCEMENT AT 16" OC, UNO. LAP SPLICE HORIZONTAL JOINT REINFORCING 75 DIAMETERS OF SIDE RODS OR 13 INCHES MINIMUM, UNO.
3. VERTICAL REINFORCING: PROVIDE VERTICAL REINFORCING AS NOTED ON PLANS AND STRUCTURAL WALL ELEVATIONS AND AS INDICATED IN TYPICAL STRUCTURAL CMU WALL DETAIL, AND NOT LESS THAN #5 AT 48" OC. MINIMUM REINFORCING NOTED SHALL BE INCREASED WHERE REQUIRED BY TYPICAL SHEAR WALL REINFORCING DETAILS OR OTHER DETAIL REQUIREMENTS. LAP SPLICE ALL REINFORCING PER MASONRY WALL REINFORCING LAP SPLICE TABLE. VERTICAL REINFORCING DOWELS SHALL BE CAST INTO THE FOUNDATION AND DETAILED TO LAP SPLICE WITH THE FOUNDATION VERTICAL REINFORCING OR DEVELOPED WITH A STANDARD HOOK, UNO.
4. BOND BEAMS: PROVIDE HORIZONTAL BOND BEAMS WITH 2 #5'S CONTINUOUS AT TOPS OF WALLS AND AT ELEVATIONS OF FLOOR & ROOF FRAMING BEARING AND DECK CONNECTIONS. BOND BEAMS SHALL BE CONTINUOUS THROUGH CONTROL JOINTS AT TOPS OF WALLS AND AT FLOOR OR ROOF BEARING AND DECK CONNECTION COURSES.

STRUCTURAL CMU WALL DETAIL 24/16S4

SCALE: NONE

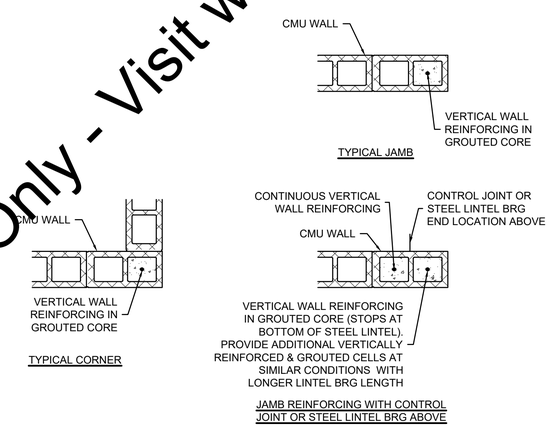

VERTICAL REINFORCING CMU WALL DETAIL 25/16S4

SCALE: 3/4" = 1'-0"

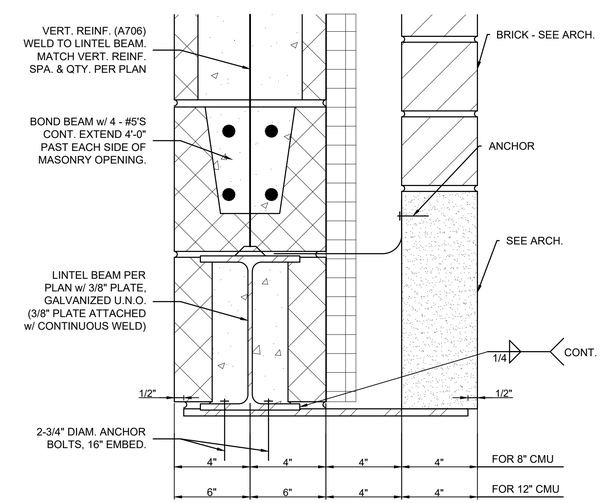

WF LINTEL DETAIL 26/16S4

SCALE: 3/4" = 1'-0"

SCALE VERIFICATION	DRAWN BY	TWL
BAR IS ONE INCH LONG ON ORIGINAL DRAWING	CHECKED BY	JRB
	APPROVED BY	JRB
	ISSUE DATE	MARCH 2020
	PROJECT NUMBER	193216-04-001

NO.	DATE	INITIALS	REVISION DESCRIPTIONS

JEFFREY ROSS BALLARD REGISTERED No. 60860191 STATE OF INDIANA PROFESSIONAL ENGINEER 03/04/2020

WESSLER ENGINEERING
More than a Project™

WASTEWATER SYSTEM EXPANSION

CITY OF FRANKFORT, INDIANA
CONTRACT A - WASTEWATER TREATMENT PLANT

TYPICAL STRUCTURAL DETAILS

SHEET NO. **16S4**

PAGE NO. 194

"For Viewing Purposes Only - Visit wesslerengineering.com to Purchase"

Drawing: J:\Frankfort\Projects\193216 Frankfort WWTP Exp\CAD 04-001\DWGs\Sheets\Area 16 - MD\16S-STR DTLS.dwg | Layout: 4 | Plotted: 02/28/20 @ 12:46:17 | LastSavedBy: TravisL

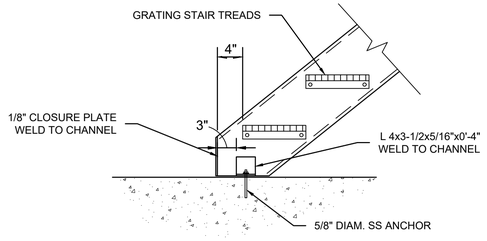

BOTTOM STRINGER SUPPORT DETAIL (27 / 16S5)

SCALE: 1" = 1'-0"

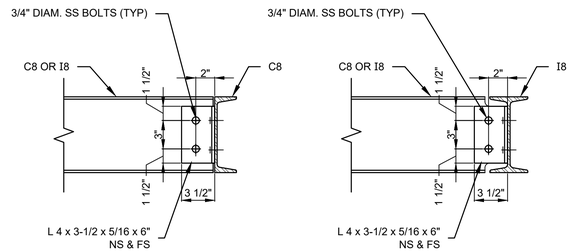

C8 AND I8 TO C8 AND I8 DETAIL (28 / 16S5)

SCALE: 1 1/2" = 1'-0"

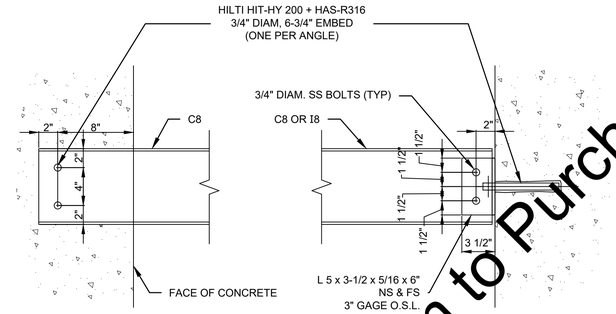

C8 AND I8 TO CONCRETE DETAIL (29 / 16S5)

SCALE: 1 1/2" = 1'-0"

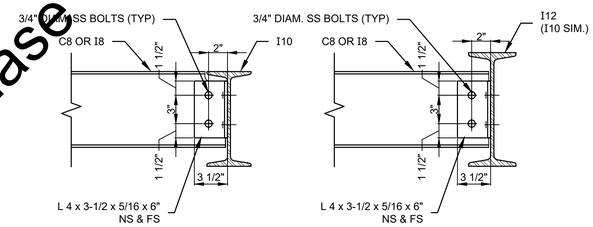

C8 AND I8 TO I10 AND I12 DETAIL (30 / 16S5)

SCALE: 1 1/2" = 1'-0"

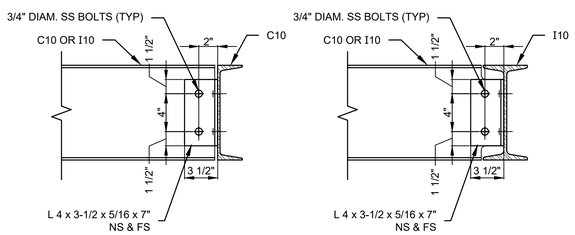

C10 AND I10 TO C10 AND I10 DETAIL (31 / 16S5)

SCALE: 1 1/2" = 1'-0"

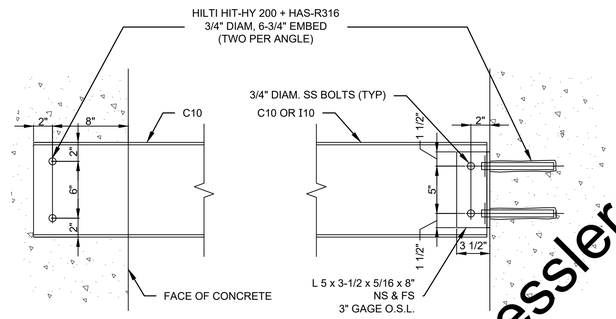

C10 AND I10 TO CONCRETE DETAIL (32 / 16S5)

SCALE: 1 1/2" = 1'-0"

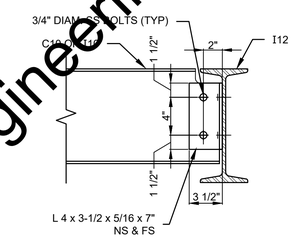

C10 AND I10 TO I12 DETAIL (33 / 16S5)

SCALE: 1 1/2" = 1'-0"

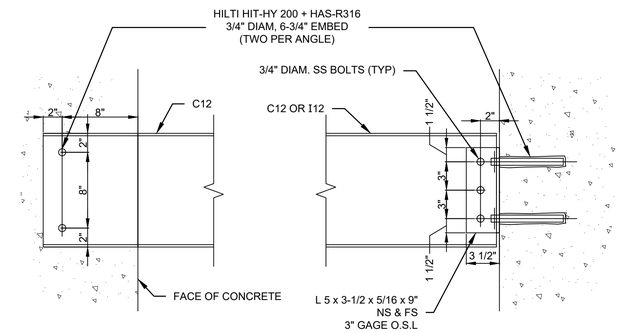

C12 AND I12 TO CONCRETE DETAIL (34 / 16S5)

SCALE: 1 1/2" = 1'-0"

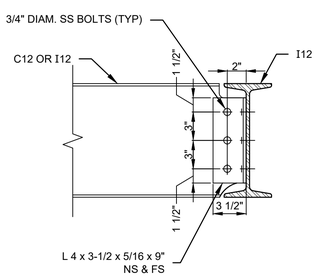

C12 AND I12 TO I12 DETAIL (35 / 16S5)

SCALE: 1 1/2" = 1'-0"

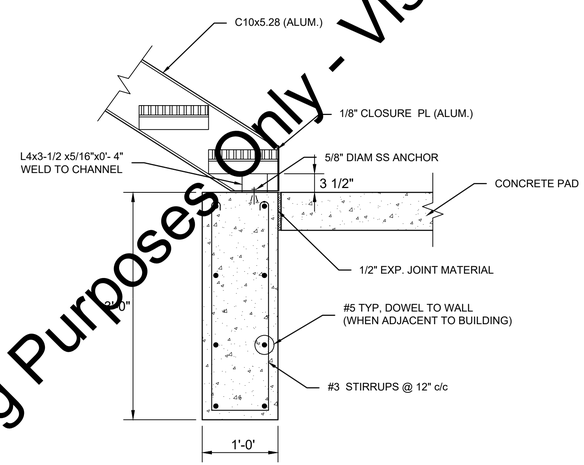

EXTERIOR STAIR SUPPORT FOUNDATION DETAIL (36 / 16S5)

SCALE: 1 1/2" = 1'-0"

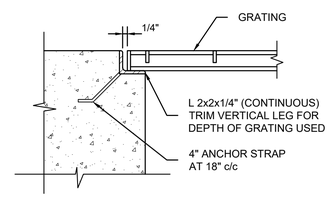

GRATING SUPPORT DETAIL - TYPE 1

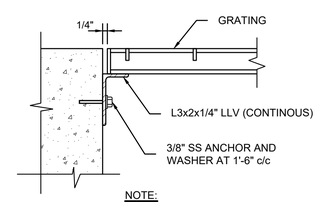

NOTE:

1. SUPPORT SHALL BE ALUMINUM.

GRATING SUPPORT DETAIL - TYPE 2

GRADING SUPPORT DETAILS (37 / 16S5)

SCALE: 3" = 1'-0"

"For Viewing Purposes Only - Visit wesslerengineering.com to Purchase"

SCALE VERIFICATION	DRAWN BY	TWL
BAR IS ONE INCH LONG ON ORIGINAL DRAWING	CHECKED BY	JRB
	APPROVED BY	JRB
	ISSUE DATE	MARCH 2020
	PROJECT NUMBER	193216-04-001

NO.	DATE	INITIALS	REVISION DESCRIPTIONS

JEFFREY ROSS BALLARD REGISTERED No. 60860191 STATE OF INDIANA PROFESSIONAL ENGINEER 03/04/2020

WESSLER ENGINEERING
More than a Project™

WASTEWATER SYSTEM EXPANSION

CITY OF FRANKFORT, INDIANA
CONTRACT A - WASTEWATER TREATMENT PLANT

TYPICAL STRUCTURAL DETAILS

SHEET NO. **16S5**

PAGE NO. 195

Drawing: J:\Frankfort\Projects\193216 Frankfort WWTP Exp\CAD 04-001\DWG\Sheets\Area 16 - MD\16S-STR DTLS.dwg | Layout: 5 | Plotted: 02/28/20 @ 12:46:19 | LastSavedBy: TravisL

"For Viewing Purposes Only - Visit wesslerengineering.com to Purchase"

PANEL SCHEDULE

DESIGNATION:	"PP-TAD"	MAINS:	400 AMP MAIN CIRCUIT BREAKER
LOCATION:	THICKENING BUILDING	BUS SIZE	400 AMP MAIN CIRCUIT BREAKER
VOLTAGE:	480Y/277 VOLT	PANEL MOUNTING:	SURFACE (NEMA 12 DOOR IN DOOR)
PHASE:	3 PHASE, 4 WIRE	ALL BREAKERS:	18,000 A.I.C. (MINIMUM)

CKT. NO.	LOAD DESCRIPTION	#	KVA	CKT. BKR. AMPS	CKT. BKR. POLE	KVA A	KVA B	KVA C	CKT. BKR. AMPS	CKT. BKR. POLE	KVA	#	LOAD DESCRIPTION	CKT. NO.
1	SPD			60	3	33.30			150	3	33.30		CENTRIFUGE CONTROL PANEL(CP-CENT)	2
3				--	--		33.30		--	--	33.30			4
5				--	--			33.30	--	--	33.30			6
7	SLUDGE GRINDER		1	30	3	1.00			40	3			SPARE	8
9			1	--	--		1.00		--	--				10
11			1	--	--			1.00	--	--				12
13	ROTARY DRUM THICKNER (CPRDT)		3.33	40	3	9.66			40	3	6.33			14
15			3.33	--	--		9.66		--	--	6.33			16
17			3.33	--	--			9.66	--	--	6.33			18
19	SPARE			30	3	0.00			30	3			SPARE	20
21				--	--		0.00		--	--				22
23				--	--			0.00	--	--				24
25	TRANSFORMER T-LP-TAD		10.00	60	3	30.00			60	3	20.00		TANKLESS WATER HEATER	26
27			10.00	--	--		30.00		--	--	20.00			28
29			10.00	--	--			30.00	--	--	20.00			30
31	SPARE			20	3	0.00			20	3			SPARE	32
33				--	--		0.00		--	--				34
35				--	--			0.00	--	--				36
37	SPARE			20	3	0.00			20	3			SPARE	38
39				--	--		0.00		--	--				40
41				--	--			0.00	--	--				42
	TOTAL CONNECTED LOAD:					73.96	73.96	73.96	TOTAL =		221.88	KVA		

\# ONE (1) OR TWO (2) DIGIT NUMBERS REFER TO PANELBOARD BRANCH CIRCUIT CONDUIT AND CABLE SCHEDULE ON THIS SHEET.

PANEL SCHEDULE

DESIGNATION:	"PP-AER"	MAINS:	400A (SPECIAL INTERLOCK OF TWO MAINS, CKT. 1 AND 2)
LOCATION:	AERATION BUILDING	BUS SIZE	400A
VOLTAGE:	480/277 VOLT	PANEL MOUNTING:	SURFACE (NEMA 12 DOOR IN DOOR)
PHASE:	3 PHASE, 4 WIRE	ALL BREAKERS:	18,000 A.I.C. (MINIMUM)

CKT. NO.	LOAD DESCRIPTION	#	KVA	CKT. BKR. AMPS	CKT. BKR. POLE	KVA A	KVA B	KVA C	CKT. BKR. AMPS	CKT. BKR. POLE	KVA	#	LOAD DESCRIPTION	CKT. NO.
1	FEED FROM SB-CITY			400	3	0.00			400	3			FEED FROM PP-AER-E	2
3	MECHANICAL INTERLOCK WITH CKT NO. 2			--	--		0.00		--	--			MECHANICAL INTERLOCK WITH CKT NO. 1	4
5				--	--			0.00	--	--				6
7	EX SEC TREATMENT BLOWER NO.3		50.00	250	3	100.00			250	3	50.00		EX SEC TREATMENT BLOWER NO.4	8
9			50.00	--	--		100.00		--	--	50.00			10
11			50.00	--	--			100.00	--	--	50.00			12
13	SPARE			20	3	0.00			20	3			SPARE	14
15				--	--		0.00		--	--				16
17				--	--			0.00	--	--				18
19	SPARE			20	3	0.00			20	3			SPARE	20
21				--	--		0.00		--	--				22
23				--	--			0.00	--	--				24
25	SPARE			20	3	0.00			20	3			SPARE	26
27				--	--		0.00		--	--			"	28
29				--	--			0.00	--	--			"	30
31	SPARE			20	3	0.00			20	3			SPARE	32
33	"			--	--		0.00		--	--			"	34
35	"			--	--			0.00	--	--			"	36
37	SPARE			60	3	0.00			60	3			SPD	38
39	"			--	--		0.00		--	--				40
41	"			--	--			0.00	--	--				42
	TOTAL CONNECTED LOAD:					100.00	100.00	100.00	TOTAL =		300.00	KVA		

\# ONE (1) OR TWO (2) DIGIT NUMBERS REFER TO PANELBOARD BRANCH CIRCUIT CONDUIT AND CABLE SCHEDULE ON THIS SHEET.

PANEL SCHEDULE

DESIGNATION:	"PP-AER-E"	MAINS:	800 AMP MAIN CIRCUIT BREAKER
LOCATION:	SCREENING BUILDING ELECTRICAL ROO	BUS SIZE	1200 AMP
VOLTAGE:	480/277 VOLT	PANEL MOUNTING:	SURFACE (NEMA 12 DOOR IN DOOR)
PHASE:	3 PHASE, 4 WIRE	ALL BREAKERS:	18,000 A.I.C. (MINIMUM)

CKT. NO.	LOAD DESCRIPTION	#	KVA	CKT. BKR. AMPS	CKT. BKR. POLE	KVA A	KVA B	KVA C	CKT. BKR. AMPS	CKT. BKR. POLE	KVA	#	LOAD DESCRIPTION	CKT. NO.
1	FEED TO PP-AER		100	400	3	166.60			300	3	66.60		SEC TREATMENT BLOWER NO.1	2
3			100	--	--		166.60		--	--	66.60			4
5			100	--	--			166.60	--	--	66.60			6
7	SEC TREATMENT BLOWER NO.2		66.6	300	3	66.60			20	3	0.00		SPARE	8
9			66.6	--	--		66.60		--	--	0.00			10
11			66.6	--	--			66.60	--	--	0.00			12
13	WAS HOLDING TANK BASIN MIXER NO.1		1.3	20	3	2.60			20	3	1.30		WAS HOLDING TANK BASIN MIXER NO.2	14
15			1.3	--	--		2.60		--	--	1.30			16
17			1.3	--	--			2.60	--	--	1.30			18
19	SPARE		0.00	20	3	1.00			20	3	1.00		DIGESTER SLUDGE TANK MIXER NO.1	20
21			0.00	--	--		1.00		--	--	1.00			22
23			0.00	--	--			1.00	--	--	1.00			24
25	DIGESTER SLUDGE TANK MIXER NO.2		1.00	20	3	6.00			30	3	5.00		CENTRIFUE FEED PUMP	26
27			1.00	--	--		6.00		--	--	5.00			28
29			1.00	--	--			6.00	--	--	5.00			30
31	WAS TRANSFER PUMP NO.1		5.00	30	3	10.00			30	3	5.00		WAS TRANSFER PUMP NO.2	32
33			5.00	--	--		10.00		--	--	5.00			34
35			5.00	--	--			10.00	--	--	5.00			36
37	TRANSFORMER T-LP-AER			50	3	1.20			60	3	1.20	11	SPD	38
39				--	--		1.20		--	--	1.20			40
41				--	--			1.20	--	--	1.20			42
	TOTAL CONNECTED LOAD:					254.00	254.00	254.00	TOTAL =		762.00	KVA		

\# ONE (1) OR TWO (2) DIGIT NUMBERS REFER TO PANELBOARD BRANCH CIRCUIT CONDUIT AND CABLE SCHEDULE ON THIS SHEET.

PANEL SCHEDULE

DESIGNATION:	"PP-SPB"	MAINS:	800 AMP MAIN CIRCUIT BREAKER
LOCATION:	SLUDGE PROCESS BUILDING	BUS SIZE	1000 AMP
VOLTAGE:	480Y/277 VOLT	PANEL MOUNTING:	SURFACE (NEMA 12 DOOR IN DOOR)
PHASE:	3 PHASE, 4 WIRE	ALL BREAKERS:	18,000 A.I.C. (MINIMUM)

CKT. NO.	LOAD DESCRIPTION	#	KVA	CKT. BKR. AMPS	CKT. BKR. POLE	KVA A	KVA B	KVA C	CKT. BKR. AMPS	CKT. BKR. POLE	KVA	#	LOAD DESCRIPTION	CKT. NO.
1	SPD			60	3	30.00			200	3	30.00		MCC-6	2
3				--	--		30.00		--	--	30.00			4
5				--	--			30.00	--	--	30.00			6
7	SLUDGE RECIRCULATION PUMP NO.2		1.33	20	3	6.33			40	3	5.00		DIGESTER SLUDGE TRANSFER PUMP NO.1	8
9			1.33	--	--		6.33		--	--	5.00			10
11			1.33	--	--			6.33	--	--	5.00			12
13	DIGESTER SLUDGE TRANSFER PUMP NO.2		5	40	3	20.00			60	3	15.00		BOILER NO.2 CONTROL PANEL(CP-BLR2)	14
15			5	--	--		20.00		--	--	15.00			16
17			5	--	--			20.00	--	--	15.00			18
19	PAENL PP-DCB		7.00	200	3	62.00			400	3	55.00		PANEL PP-TAD	20
21			7.00	--	--		62.00		--	--	55.00			22
23			7.00	--	--			62.00	--	--	55.00			24
25	SPARE			20	3	0.00			20	3			SPARE	26
27				--	--		0.00		--	--				28
29				--	--			0.00	--	--				30
31	SPARE			40	3	0.00			30	3			SPARE	32
33				--	--		0.00		--	--				34
35				--	--			0.00	--	--				36
37	SPARE			20	3	0.00			30	3			SPARE	38
39				--	--		0.00		--	--				40
41				--	--			0.00	--	--				42
	TOTAL CONNECTED LOAD:					118.33	118.33	118.33	TOTAL =		354.99	KVA		

\# ONE (1) OR TWO (2) DIGIT NUMBERS REFER TO PANELBOARD BRANCH CIRCUIT CONDUIT AND CABLE SCHEDULE ON THIS SHEET.

PANEL SCHEDULE

DESIGNATION:	"PP-ANOX"	MAINS:	600 AMP MAIN CIRCUIT BREAKER
LOCATION:	PRIMARY SLUDGE PUMP BUILDING	BUS SIZE	600 AMP
VOLTAGE:	480Y/277 VOLT	PANEL MOUNTING:	SURFACE (NEMA 12 DOOR IN DOOR)
PHASE:	3 PHASE, 4 WIRE	ALL BREAKERS:	18,000 A.I.C. (MINIMUM)

CKT. NO.	LOAD DESCRIPTION	#	KVA	CKT. BKR. AMPS	CKT. BKR. POLE	KVA A	KVA B	KVA C	CKT. BKR. AMPS	CKT. BKR. POLE	KVA	#	LOAD DESCRIPTION	CKT. NO.
1	EX TRANSFORMER T-LP-PE		2.5	15	2	2.83			15	3	0.33		EX EF-4	2
3			2.5	--	--		2.83		--	--	0.33			4
5	SPACE		0	--	--			0.33	--	--	0.33			6
7	EX PP-P		10	100	3	11.33			20	3	1.33		ANAEROBIC MIXER NO.1	8
9			10	--	--		11.33		--	--	1.33			10
11			10	--	--			11.33	--	--	1.33			12
13	ANAEROBIC MIXER NO.2		1.33	20	3	2.66			20	3	1.33		ANAEROBIC MIXER NO.3	14
15			1.33	--	--		2.66		--	--	1.33			16
17			1.33	--	--			2.66	--	--	1.33			18
19	ANAEROBIC MIXER NO.4		1.33	20	3	3.83			20	3	2.50		ANOXIC MIXER NO.1	20
21			1.33	--	--		3.83		--	--	2.50			22
23			1.33	--	--			3.83	--	--	2.50			24
25	ANOXIC MIXER NO.2		2.50	20	3	2.50			20	3			SPARE	26
27			2.50	--	--		2.50		--	--				28
29			2.50	--	--			2.50	--	--				30
31	SPD			60	3	16.60			50	3	16.60		TRANSFORMER T-LP-P	32
33				--	--		16.60		--	--	16.60			34
35				--	--			16.60	--	--	16.60			36
37	CONTROL RATE PUMP NO.3		33.00	200	3	66.00			200	3	33.00		CONTROL RATE PUMP NO.4	38
39			33.00	--	--		66.00		--	--	33.00			40
41			33.00	--	--			66.00	--	--	33.00			42
	TOTAL CONNECTED LOAD:					105.75	105.75	103.25	TOTAL =		314.75	KVA		

\# ONE (1) OR TWO (2) DIGIT NUMBERS REFER TO PANELBOARD BRANCH CIRCUIT CONDUIT AND CABLE SCHEDULE ON THIS SHEET.

PANEL SCHEDULE

DESIGNATION:	"PP-SCB-B"	MAINS:	MAIN LUG ONLY
LOCATION:	SECONDARY CONTROL RM	BUS SIZE	1000 AMP
VOLTAGE:	480/277 VOLT	PANEL MOUNTING:	SURFACE (NEMA 12 DOOR IN DOOR)
PHASE:	3 PHASE, 4 WIRE	ALL BREAKERS:	18,000 A.I.C. (MINIMUM)

CKT. NO.	LOAD DESCRIPTION	#	KVA	CKT. BKR. AMPS	CKT. BKR. POLE	KVA A	KVA B	KVA C	CKT. BKR. AMPS	CKT. BKR. POLE	KVA	#	LOAD DESCRIPTION	CKT. NO.
1	SECONDARY CLARIFIER SPLITTER BOX		1	20	3	2.00			20	3	1.00		SECONDARY CLARIFIER SPLITTER BOX	2
3	GATE NO.1		1	--	--		2.00		--	--	1.00		GATE NO.2	4
5			1	--	--			2.00	--	--	1.00			6
7	SPARE			20	3	0.00			20	3			SPARE	8
9				--	--		0.00		--	--				10
11				--	--			0.00	--	--				12
13	SECONDARY CONTROL BUILDING		1	20	3	1.33			20	3	0.33		WAS CONTROL VALVE	14
15	SUMP PUMPS		1	--	--		1.33		--	--	0.33			16
17			1	--	--			1.33	--	--	0.33			18
19	TRANSFORMER T-LP-SCB		15.00	100	3	120.00			600	3	105.00		PP-ANOX	20
21			15.00	--	--		120.00		--	--	105.00			22
23			15.00	--	--			120.00	--	--	105.00			24
25	IMLR PUMP NO.1		25.00	150	3	50.00			150	3	25.00		IMLR PUMP NO.2	26
27			25.00	--	--		50.00		--	--	25.00			28
29			25.00	--	--			50.00	--	--	25.00			30
31	SPARE			150	3	27.00			150	3	27.00		AIR HANDLING UNIT WITH HEATER	32
33				--	--		27.00		--	--	27.00			34
35				--	--			27.00	--	--	27.00			36
37	SPARE			20	3	0.33			20	3	0.33		EXHAUST FAN	38
39				--	--		0.33		--	--	0.33			40
41				--	--			0.33	--	--	0.33			42
	TOTAL CONNECTED LOAD:					200.66	200.66	200.66	TOTAL =		601.98	KVA		

\# ONE (1) OR TWO (2) DIGIT NUMBERS REFER TO PANELBOARD BRANCH CIRCUIT CONDUIT AND CABLE SCHEDULE ON THIS SHEET.

PANEL SCHEDULE

DESIGNATION:	"PP-SCB-A"	MAINS:	800 AMP MAIN CIRCUIT BREAKER
LOCATION:	SECONDARY CONTROL RM	BUS SIZE	1000 AMP
VOLTAGE:	480/277 VOLT	PANEL MOUNTING:	SURFACE (NEMA 12 DOOR IN DOOR)
PHASE:	3 PHASE, 4 WIRE	ALL BREAKERS:	18,000 A.I.C. (MINIMUM)

CKT. NO.	LOAD DESCRIPTION	#	KVA	CKT. BKR. AMPS	CKT. BKR. POLE	KVA A	KVA B	KVA C	CKT. BKR. AMPS	CKT. BKR. POLE	KVA	#	LOAD DESCRIPTION	CKT. NO.
1	RAS PUMP NO.9-1		13.3	70	3	26.60			70	3	13.30		RAS PUMP NO.9-2	2
3			13.3	--	--		26.60		--	--	13.30			4
5			13.3	--	--			26.60	--	--	13.30			6
7	RAS PUMP NO.9-3		13.3	70	3	13.30			70	3			FUTURE RAS PUMP NO. 9-4	8
9			13.3	--	--		13.30		--	--				10
11			13.3	--	--			13.30	--	--				12
13	FUTURE RAS PUMP NO. 9-5		0	70	3	0.17			20	3	0.17		CLARIFIER NO.1	14
15			0	--	--		0.17		--	--	0.17			16
17			0	--	--			0.17	--	--	0.17			18
19	CLARIFIER NO.2		0.17	20	3	0.17				3	0.00		SPARE	20
21			0.17	--	--		0.17		--	--	0.00			22
23			0.17	--	--			0.17	--	--	0.00			24
25	SPARE		0.00	20	3	1.00			20	3	1.00		SECONDARY CLARIFIER NO.1 SLUDGE VALVE	26
27			0.00	--	--		1.00		--	--	1.00			28
29			0.00	--	--			1.00	--	--	1.00			30
31	SECONDARY CLARIFIER NO.2 SLUDGE VALVE		1.00	20	3	1.00			60	3			SPD	32
33			1.00	--	--		1.00		--	--				34
35			1.00	--	--			1.00	--	--				36
37	SPARE			20	3	0.00			800	3		11	PANEL PP-SCB-B	38
39				--	--		0.00		--	--				40
41				--	--			0.00	--	--				42
	TOTAL CONNECTED LOAD:					42.24	42.24	42.24	TOTAL =		126.71	KVA		

\# ONE (1) OR TWO (2) DIGIT NUMBERS REFER TO PANELBOARD BRANCH CIRCUIT CONDUIT AND CABLE SCHEDULE ON THIS SHEET.

SCALE VERIFICATION	DRAWN BY	EAS	NO.	DATE	INITIALS	REVISION DESCRIPTIONS
BAR IS ONE INCH LONG ON ORIGINAL DRAWING	CHECKED BY	BRP				
	APPROVED BY	WCM				
	ISSUE DATE	MARCH 2020				
	PROJECT NUMBER	193216-04-001				

WAYNE C. MOORE REGISTERED No. 10707476 STATE OF INDIANA PROFESSIONAL ENGINEER 03/04/2020

WESSLER ENGINEERING
More than a Project™

WASTEWATER SYSTEM EXPANSION

CITY OF FRANKFORT, INDIANA
CONTRACT A - WASTEWATER TREATMENT PLANT

PANEL SCHEDULES

SHEET NO. **16E1**

Drawing: J:\Frankfort\Projects\193216 Frankfort WWTP Exp\CAD 04-001\DWG\Sheets\Area 17 - Elec\16E1 ELECT PANEL SCHEDULES.dwg | Layout: 16E1 | Plotted: 03/05/20 @ 11:56:13 | LastSavedBy: WayneM

PANEL SCHEDULE 10 KVA

DESIGNATION: "LP-BIO"
LOCATION: BIOSOLIDS BUILDING
VOLTAGE: 120/240V
PHASE: 1 PHASE, 3 WIRE

MAINS: 60 AMP MAIN CIRCUIT BREAKER
BUS SIZE: 100 AMP
PANEL MOUNTING: SURFACE
ALL BREAKERS: 10,000 A.I.C. (MINIMUM)

CKT. NO.	LOAD DESCRIPTION	#	KVA	CKT. BKR. AMPS	CKT. BKR. POLE	KVA A	KVA B	CKT. BKR. AMPS	CKT. BKR. POLE	KVA	#	LOAD DESCRIPTION	CKT. NO.
1	LTGS (SOUTH)	1	0.77	20	1	1.54		20	1	0.77	1	LGTS (NORTH)	2
3	LGTS (SOUTH MIDDLE)	1	0.70	20	1		1.40	20	1	0.70	1	LGTS (NORTH MIDDLE)	4
5	LGTS (MIDDLE)	1	0.63	20	1	0.63		20	1			SPARE	6
7	RECEPT(3)	1	0.54	20	1		0.54	20	1			SPARE	8
9	RECEPT - RACK	1	0.28	20	1	0.28		20	2			SURGE PROTECTOR	10
11	SPARE			20	1		0.00						12
	TOTAL CONNECTED LOAD:					2.45	1.94	TOTAL =		4.39	KVA		

1. USE #8 WIRE ON ALL CIRCUITS THIS PANEL.

NEMA 3R STAINLESS STEEL ENCLOSURE

PANEL SCHEDULE

DESIGNATION: PANEL "LP-ANOX"
LOCATION: BNR ELECTRICAL ROOM
VOLTAGE: 208Y/120 VOLT
PHASE: 3 PHASE, 4 WIRE

MAINS: 200 AMP MAIN CIRCUIT BREAKER
BUS SIZE: 225 AMP
PANEL MOUNTING: SURFACE (NEMA 12 DOOR IN DOOR)
ALL BREAKERS: 10,000 A.I.C. (MINIMUM)

CKT. NO.	LOAD DESCRIPTION	#	KVA	CKT. BKR. AMPS	CKT. BKR. POLE	KVA A	KVA B	KVA C	CKT. BKR. AMPS	CKT. BKR. POLE	KVA	#	LOAD DESCRIPTION
1	SPARE			20	1	0			20	1			SPARE
3	SPARE			20	1		0		20	1			SPARE
5	SPARE			20	1			0	20	1			SPARE
7	SPARE			20	1	0			20	1			SPARE
9	SPARE			20	1		0		20	1			SPARE
11	SPARE			20	1			0	20	1			SPARE
13	SPARE			20	1	0			20	1			SPARE
15	SPARE			20	1		0		20	1			SPARE
17	SPARE			20	1			0	20	1			SPARE
19	SPARE			20	1	0			20	1			SPARE
21	SPARE			20	1		0		20	1			SPARE
23	SPARE			20	1			0	20	1			SPARE
25	SPARE			20	1	0			20	1			SPARE
27	SPARE			20	1		0		20	1			SPARE
29	SPARE			20	1			0	20	1			SPARE
31	SPARE			20	1	0			20	1			SPARE
33	SPARE			20	1		0		20	1			SPARE
35	SPARE			20	1			0	20	1			SPARE
37	SPARE			20	1	0			30	3			SPD
39	SPARE			20	1		0						
41	SPARE			20	1			0					
	TOTAL CONNECTED LOAD:					0	0	0	TOTAL =		0	KVA	

ONE (1) OR TWO (2) DIGIT NUMBERS REFER TO

PANEL IS FOR FUTURE 120/208V AREA LOADS

PANEL SCHEDULE

DESIGNATION: PANEL "LP-TAD"
LOCATION: TAD BUILDING
VOLTAGE: 208Y/120 VOLT
PHASE: 3 PHASE, 4 WIRE

MAINS: 125 AMP MAIN CIRCUIT BREAKER
BUS SIZE: 125 AMP
PANEL MOUNTING: SURFACE (NEMA 12 DOOR IN DOOR)
ALL BREAKERS: 10,000 A.I.C. (MINIMUM)

CKT. NO.	LOAD DESCRIPTION	#	KVA	CKT. BKR. AMPS	CKT. BKR. POLE	KVA A	KVA B	KVA C	CKT. BKR. AMPS	CKT. BKR. POLE	KVA	#	LOAD DESCRIPTION
1	RECEPT (4)			20	1	0			20	1			RECEPT (4)
3	RECEPT (3)			20	1		0		20	1			RECEPT (4)
5	RECEPT (4)			20	1			0	20	1			PLC-TAD
7	SPARE			20	1	0			20	1			FIT-0701
9	SPARE			20	1		0		20	1			SPARE
11	13-CHFP4			20	1			0	20	1			LGTS SOLID DISCHARGE
13	13-CHFP3			20	1	0			20	1			LGTS PUMP RM
15	13-CHFP2			20	1		0		20	1			EXTERIOR,EM, AND EXITS
17	13-CHFP1			20	1			0	20	1			LGTS EQUIPMENT RM
19	SPARE			20	1	0			20	1			LGTS EM AND ELECTRICAL RM
21	SPARE			20	1		0		20	1			SPACE
23	SPARE			20	1			0	20	1			SPARE
25	SPARE			20	1	0			20	1			SPARE
27	SPARE			20	1		0		20	1			SPARE
29	SPARE			20	1			0	20	1			SPARE
31	SPARE			20	1	0			20	1			SPARE
33	SPARE			20	1		0		20	1			SPARE
35	SPARE			20	1			0	20	1			SPARE
37	SPARE			20	1	0			30	3			SPD
39	SPARE			20	1		0						
41	SPARE			20	1			0					
	TOTAL CONNECTED LOAD:					0	0	0	TOTAL =		0	KVA	

ONE (1) OR TWO (2) DIGIT NUMBERS REFER TO

PANEL SCHEDULE

DESIGNATION: PANEL "LP-SPB"
LOCATION: SOLIDS PROCESS BUILDING
VOLTAGE: 208Y/120 VOLT
PHASE: 3 PHASE, 4 WIRE

MAINS: 125 AMP MAIN CIRCUIT BREAKER
BUS SIZE: 125 AMP
PANEL MOUNTING: SURFACE (NEMA 12 DOOR IN DOOR)
ALL BREAKERS: 10,000 A.I.C. (MINIMUM)

CKT. NO.	LOAD DESCRIPTION	#	KVA	CKT. BKR. AMPS	CKT. BKR. POLE	KVA A	KVA B	KVA C	CKT. BKR. AMPS	CKT. BKR. POLE	KVA	#	LOAD DESCRIPTION
1	RECEPT (4)			20	1	0			20	1			RECEPT (3)
3	SPARE			20	1		0		20	1			RECEPT (3)
5	SPARE			20	1			0	20	1			SPARE
7	LGTS LOWER LEVEL			20	1	0			20	1			LGTS MAIN LEVEL
9	SPARE			20	1		0		20	1			EXTERIOR AND EM
11	SPARE			20	1			0	20	1			SPARE
13	SPARE			20	1	0			20	1			PLC-SPB
15	SPARE			20	1		0		20	1			AIT-1001
17	SPACE			20	1			0	20	1			FIT-1003
19	SPACE			20	1	0			20	1			AIT-1002
21	SPACE			20	1		0		20	1			FIT-1004
23	SPARE			20	1			0	20	1			FIT-1009
25	SPARE			20	1	0			20	1			FIT-1013
27	SPARE			20	1		0		20	1			SPARE
29	SPARE			20	1			0	20	1			SPARE
31	SPARE			20	1	0			20	1			SPARE
33	SPARE			20	1		0		20	1			SPARE
35	SPARE			20	1			0	20	1			SPARE
37	SPARE			20	1	0			30	3			SPD
39	SPARE			20	1		0						
41	SPARE			20	1			0					
	TOTAL CONNECTED LOAD:					0	0	0	TOTAL =		0	KVA	

ONE (1) OR TWO (2) DIGIT NUMBERS REFER TO

PANEL SCHEDULE

DESIGNATION: PANEL "LP-SCB"
LOCATION: SECONDARY CONTROL BUILDING
VOLTAGE: 208Y/120 VOLT
PHASE: 3 PHASE, 4 WIRE

MAINS: 125 AMP MAIN CIRCUIT BREAKER
BUS SIZE: 225 AMP
PANEL MOUNTING: SURFACE (NEMA 12 DOOR IN DOOR)
ALL BREAKERS: 10,000 A.I.C. (MINIMUM)

CKT. NO.	LOAD DESCRIPTION	#	KVA	CKT. BKR. AMPS	CKT. BKR. POLE	KVA A	KVA B	KVA C	CKT. BKR. AMPS	CKT. BKR. POLE	KVA	#	LOAD DESCRIPTION
1	RECEPTACLES			20	1	0			20	1			RECEPTACLES
3	SPARE			20	1		0		20	1			SPARE
5	LIGHTING - LOWER LEVEL			20	1			0	20	1			LIGHTING - MAIN LEVEL
7	EXITS AND EMERGENCY			20	1	0			20	1			LIGHTING - EXTERIOR
9	SPARE			20	1		0		20	1			PLC-SCB
11	SPARE			20	1			0	20	1			FIT-0603
13	SPARE			20	1	0			20	1			FIT-0602
15	SPARE			20	1		0		20	1			SPARE
17	SPARE			20	1			0	20	1			SPARE
19	SPARE			20	1	0			20	1			SPARE
21	SPARE			20	1		0		20	1			SPARE
23	SPARE			20	1			0	20	1			SPARE
25	SPARE			20	1	0			20	1			SPARE
27	SPARE			20	1		0		20	1			SPARE
29	SPARE			20	1			0	20	1			SPARE
31	SPARE			20	1	0			20	1			SPARE
33	SPARE			20	1		0		20	1			SPARE
35	SPARE			20	1			0	20	1			SPARE
37	SPARE			20	1	0			20	3			SPD
39	SPARE			20	1		0						
41	SPARE			20	1			0					
	TOTAL CONNECTED LOAD:					0	0	0	TOTAL =		0	KVA	

ONE (1) OR TWO (2) DIGIT NUMBERS REFER TO

"For Viewing Purposes Only - Visit wesslerengineering.com to Purchase"

SCALE VERIFICATION
BAR IS ONE INCH LONG ON ORIGINAL DRAWING

DRAWN BY: EAS
CHECKED BY: DRI
APPROVED BY: WCM
ISSUE DATE: MARCH 2020
PROJECT NUMBER: 193216-04-001

NO.	DATE	INITIALS	REVISION DESCRIPTIONS

WAYNE C. MOORE REGISTERED No. 10707476 STATE OF INDIANA PROFESSIONAL ENGINEER 03/04/2020

WESSLER ENGINEERING
More than a Project™

WASTEWATER SYSTEM EXPANSION
CITY OF FRANKFORT, INDIANA
CONTRACT A - WASTEWATER TREATMENT PLANT

PANEL SCHEDULES

SHEET NO. **16E2**

Drawing: J:\Frankfort\Projects\193216 Frankfort WWTP Exp\CAD 04-001\DWG\Sheets\Area 17 - Elec\16E ELECT PANEL SCHEDULES.dwg | Layout: 16E2 | Plotted: 03/05/20 @ 11:56:19 | LastSavedBy: WayneM

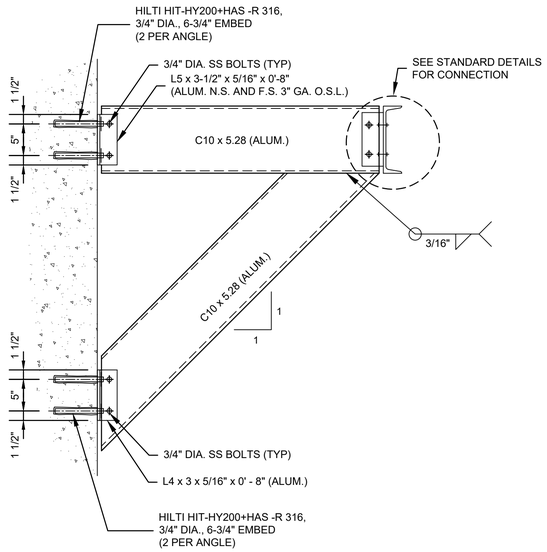

KNEE BRACE DETAIL (38 / 16S6)

SCALE: 1" = 1'-0"

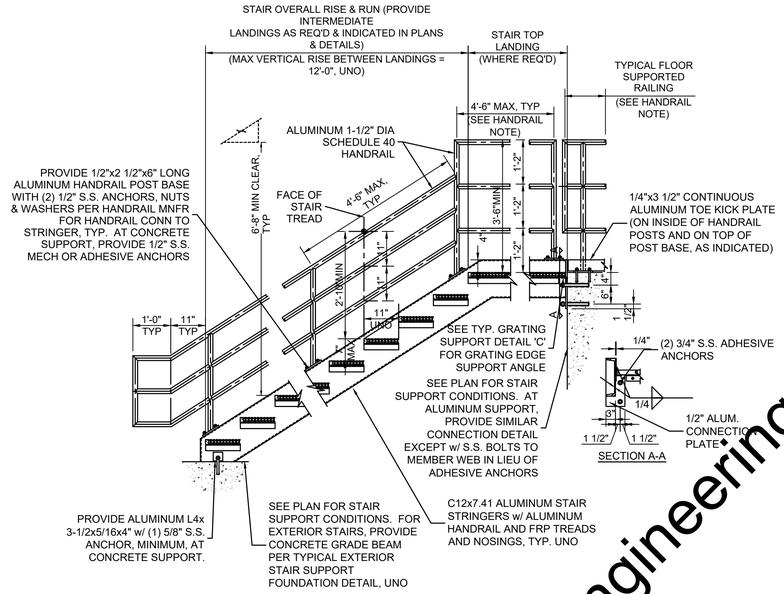

GENERAL NOTE:

1. DETAIL SHOWS TYPICAL MINIMUM STAIR & HANDRAIL REQUIREMENTS. FINAL DESIGN OF PERFORMANCE-SPECIFIED ITEMS SHALL BE BY MNFR, IN ACCORDANCE WITH REQUIREMENTS INDICATED ON DRAWINGS, IN METAL STAIR SCHEDULES, AND IN SPECIFICATION.

HANDRAIL NOTE:

1. HANDRAIL SHALL TYPICALLY EXTEND 12" BEYOND TOP RISER (PARALLEL w/ WALKING SURFACE) AND 12" + TREAD DEPTH BEYOND BOTTOM RISER (AS INDICATED). COORDINATE HANDRAIL EXTENSIONS WITH CONDITIONS AT TOP & BOTTOM OF STAIR.

STAIR AND RAILING DETAIL (40 / 16S6)

SCALE: NONE

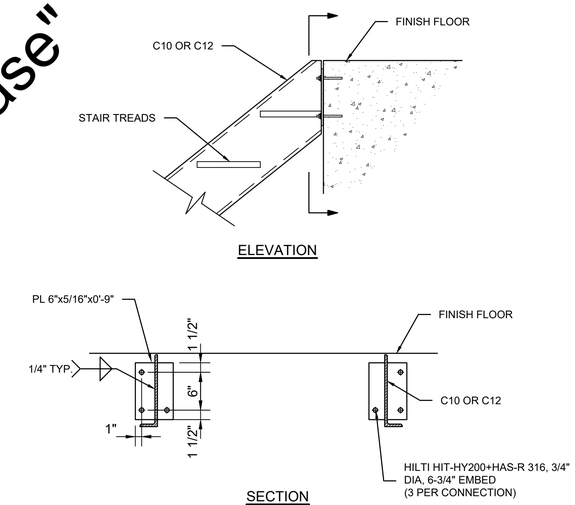

NOTE:

1. ALL STAIR FRAMING MATERIAL SHALL BE ALUMINUM UNLESS NOTED OTHERWISE.

STAIR TOP SUPPORT DETAIL (41 / 16S6)

SCALE: 1" = 1'-0"

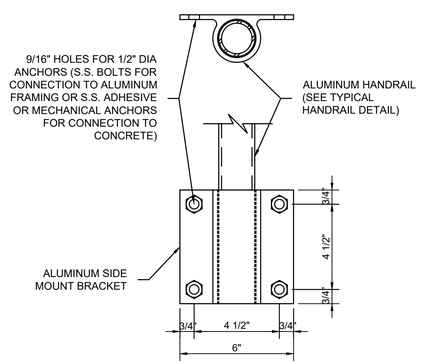

NOTE:

1. SEE PROJECT SPECIFIC DETAILS FOR LOCATIONS WHERE SIDE MOUNTED HANDRAIL IS REQUIRED

SIDE MOUNTED HANDRAIL CONNECTION DETAIL (39 / 16S6)

SCALE: 3" = 1'-0"

"For Viewing Purposes Only - Visit wesslerengineering.com to Purchase"

SCALE VERIFICATION	DRAWN BY	TWL
BAR IS ONE INCH LONG ON ORIGINAL DRAWING	CHECKED BY	JRB
	APPROVED BY	JRB
	ISSUE DATE	MARCH 2020
	PROJECT NUMBER	193216-04-001

NO.	DATE	INITIALS	REVISION DESCRIPTIONS

JEFFREY ROSS BALLARD REGISTERED No. 60860191 STATE OF INDIANA PROFESSIONAL ENGINEER 03/04/2020

WESSLER ENGINEERING
More than a Project™

WASTEWATER SYSTEM EXPANSION

CITY OF FRANKFORT, INDIANA
CONTRACT A - WASTEWATER TREATMENT PLANT

TYPICAL STRUCTURAL DETAILS

SHEET NO. **16S6**

PAGE NO. 198

Drawing: J:\Frankfort\Projects\193216 Frankfort WWTP Exp\CAD 04-001\DWG\Sheets\Area 16 - MD\16S-STR DTLS.dwg | Layout: 6 | Plotted: 02/28/20 @ 12:46:21 | LastSavedBy: TravisL

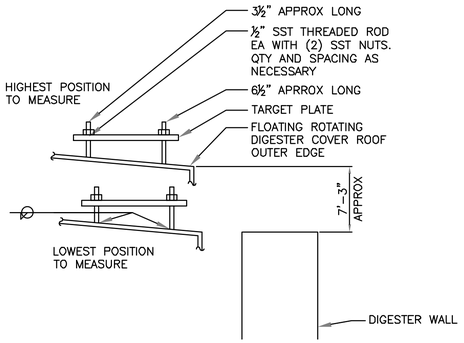

SECTION

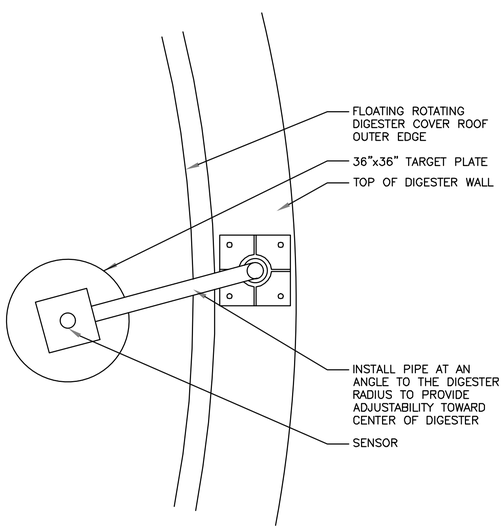

PLAN

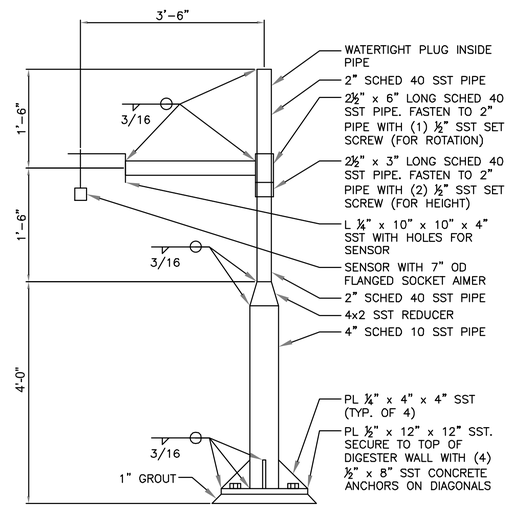

SECTION

NOTES:
1. ROUND OFF ALL EXPOSED EDGES AND CORNERS.
2. PAINT METAL IN CONTACT WITH CONCRETE ACCORDING TO SPECIFICATIONS FOR PAINTING.
3. WELD A SST NUT TO PIPE AT EACH SET SCREW LOCATION.
4. PROVIDE STEEL TARGET PLATES MOUNTED ON THE DIGESTER COVER TO PROVIDE A SMOOTH REFLECTING SURFACE AS NECESSARY TO MEET THE ULTRASONIC LEVEL METER MANUFACTURER'S RECOMMENDATIONS FOR THE METER MOUNTING AS INDICATED AND FOR THE FULL VERTICAL AND LATERAL TRAVEL OF THE COVER.
5. CUT AND MEND EXISTING RAILING ON TOP OF DIGESTER AS NECESSARY.
6. PROVIDE A SUNSHIELD FOR THE TRANSMITTER AS SPECIFIED BY MANUFACTURER.

DIGESTE LEVEL SENSOR DETAIL

SCALE: NONE

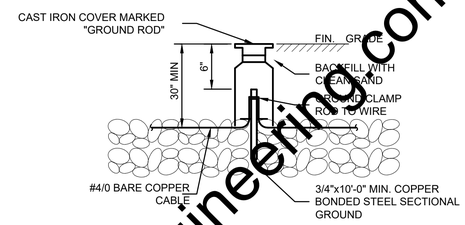

NOTES:
1. REFER TO JOB SPECIFICATION FOR MINIMUM SYSTEM RESISTANCE TO GROUND. IF THE RESISTANCE CANNOT BE MET WITH SINGLE 10'-0" RODS, ADD ADDITIONAL SECTIONS TO RODS OR ADD NEW RODS AS REQUIRED, SPACED 6'-0" TO 8'-0" FROM EXISTING RODS.
2. AMMETER SHALL DISPLAY ELECTRICAL CURRENT OF THE HEAT TRACE RECEPTACLE FOR THE DRAIN LINE.
3. LIGHTING CONTRACTOR SHALL CONTROL THE LOGO SPOT LIGHTS VIA PHOTOCELL AND/OR TIMER.
4. ALL CONDUIT AND WIRE SHALL BE 2 #12, 1 #12 GND. UNLESS OTHERWISE NOTED.

ELECTRICAL INSTALLATION GROUND ROD ASSEMBLY

SCALE: NONE

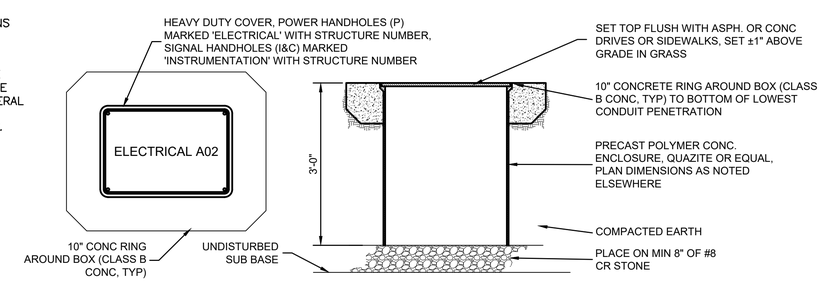

PLAN SECTION

PULL BOX AND HANDHOLE (HH) INSTALLATION DETAIL

SCALE: NONE

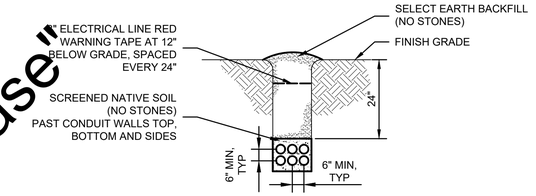

CONDUIT TRENCH DETAIL

SCALE: NONE

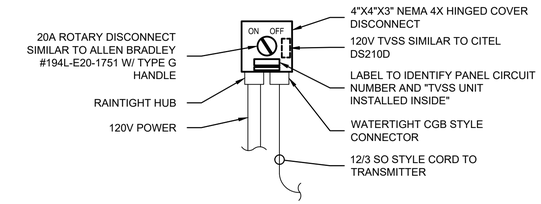

120V INSTRUMENTATION DISCONNECT AND LOCAL TVSS

SCALE: NONE

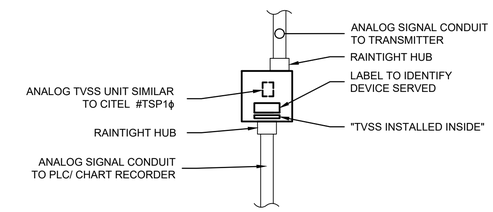

ANALOG INSTRUMENT TVSS

SCALE: NONE

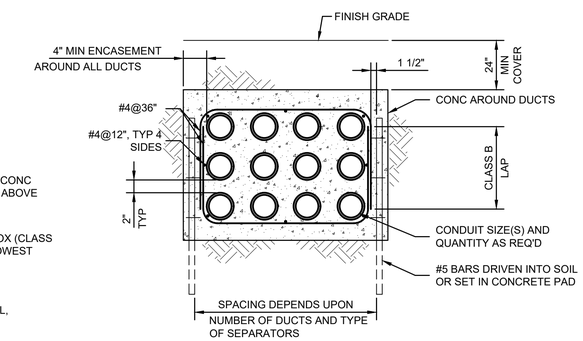

REINFORCED CONCRETE ENCASED DUCT BANKS DETAIL

SCALE: NONE

NOTE:
1. UNDER ROADS ONLY

"For Viewing Purposes Only - Visit wesslerengineering.com to Purchase"

SCALE VERIFICATION	DRAWN BY	EAS
BAR IS ONE INCH LONG ON ORIGINAL DRAWING	CHECKED BY	DRT
	APPROVED BY	WCM
	ISSUE DATE	MARCH 2020
	PROJECT NUMBER	193216-04-001

NO.	DATE	INITIALS	REVISION DESCRIPTIONS

WAYNE C. MOORE REGISTERED No. 10707476 STATE OF INDIANA PROFESSIONAL ENGINEER 03MAR2020

WESSLER ENGINEERING
More than a Project™

WASTEWATER SYSTEM EXPANSION
CITY OF FRANKFORT, INDIANA
CONTRACT A - WASTEWATER TREATMENT PLANT

ELECTRICAL DETAILS

SHEET NO. **16E3**

PAGE NO. 199

Drawing: J:\Frankfort\Projects\193216 Frankfort WWTP Exp\CAD 04-001\DWG\Sheets\Area 17 - Elec\16E ELECT PANEL SCHEDULES.dwg | Layout: 16E3 | Plotted: 03/04/20 @ 03:39:18 | LastSavedBy: MikeN

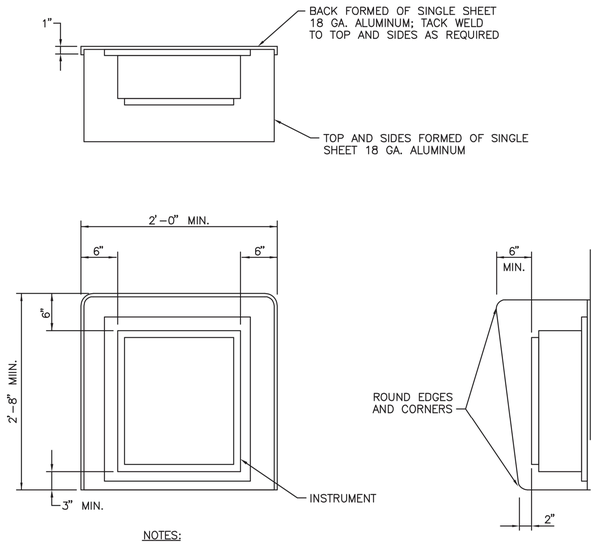

NOTES:

1. ALL EXPOSED EDGES TO BE GROUND SMOOTH AND BURR FREE.

TYPICAL SUN SHIELD MOUNTING FOR CASE MOUNTED INSTRUMENT AND LOCAL CONTROL PANELS

SCALE: NONE

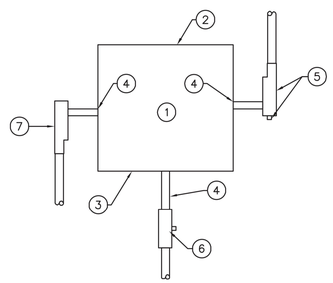

(#) KEYED NOTES:

1. FIELD ENCLOSURE CONTAINING INTERNAL OR EXTERNAL ELECTRONICS, I.E. TRANSMITTER, OR CONTROL DEVICES I.E. PUSHBUTTONS, CONTROL RELAYS, TIMERS, ETC.
2. TOP CONDUIT ENTRY PROHIBITED WITHOUT PRIOR APPROVAL OF ENGINEER.
3. BOTTOM CONDUIT ENTRY IS PREFERRED.
4. PROVIDE MINERAL WOOL DAM AND 1/4" OF REMOVAL SEALING PUTTY TO BLOCK MOISTURE AND OTHER VAPORS FROM ENTERING ENCLOSURE. PUTTY SHALL BE STI SPEC SEAL TYPE SST, OR EQUAL TO ENSURE SEALING AROUND AND BETWEEN ALL WIRES AND CABLES. STANDARD "DUCT SEAL" PUTTY IS NOT ACCEPTABLE.
5. PROVIDE "T" FITTING AND DRAIN / BREATHER FITTING TO DIVERT WATER AWAY FROM ENCLOSURE. CONNECT TO ENCLOSURE WITH SHORT CONDUIT LENGTH OR NIPPLE.
6. PROVIDE SIMILAR ARRANGEMENT TO NOTE #5 FOR BOTTOM ENTRY IF CONDUIT EXTENDS ABOVE ENCLOSURE.
7. PROVIDE "LB" FITTING AND CONNECT TO ENCLOSURE WITH SHORT CONDUIT LENGTH. DRAIN / BREATHER FITTING NOT REQUIRED IF CONDUIT DRAINS AWAY FROM ENCLOSURE.

FIELD ENCLOSURE CONNECTIONS

SCALE: NONE

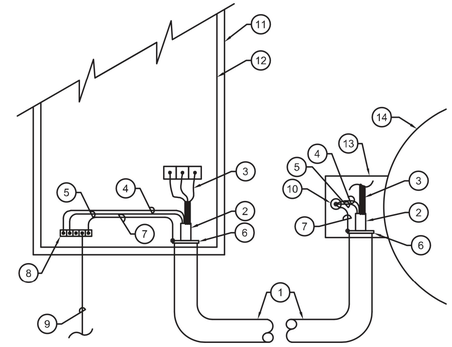

(#) KEYED NOTES:

1. CONDUIT SIZE AND TYPE AS INDICATED ON DRAWINGS. METAL CONDUIT IS PREFERRED UNLESS NOTED OTHERWISE. DO NOT RUN MONITORING OR CONTROL CONDUCTORS IN SAME CONDUIT AS VFD POWER WIRING.
2. SHIELDED VFD POWER CABLE AS SPECIFIED.
3. SIZE AND NUMBER OF CONDUCTORS AS INDICATED CONNECTED TO VFD LOAD AND MOTOR TERMINALS.
4. CONNECT GROUNDING CONDUCTOR(S) OF CABLE TO VFD GROUNDING BAR AND MOTOR TERMINAL LUG ONLY. DO NOT CONNECT TO MAIN GROUNDING BAR IN MCC, PANEL, ETC.
5. CONNECT CABLE SHIELDS AND DRAIN WIRE TO GROUNDING BAR / LUGS AT VFD AND AT MOTOR TERMINAL BOX ONLY.
6. PROVIDE INSULATED GROUNDING BUSHING FOR CONDUIT.
7. BONDING CONDUCTOR FOR CONDUIT PER NEC.
8. GROUNDING TERMINAL BAR IN VFD. VERIFY SOLID CONNECTION WITH METAL BACK PANEL OF DRIVE.
9. GROUNDING CONDUCTOR TO MAIN MCC / PANEL / SYSTEM GROUND. MINIMUM SIZE SHALL BE #6 OR AS NOTED. IF CONDUCTOR LEAVES ENCLOSURE, INSTALL IN NON-METALLIC CONDUIT.
10. GROUNDING TERMINAL IN MOTOR CONNECTION BOX.
11. VFD ENCLOSURE AS INDICATED.
12. VFD SUB-PANEL INSIDE OF ENCLOSURE.
13. MOTOR CONNECTION BOX.
14. MOTOR, SIZE AND TYPE AS INDICATED ON DRAWINGS.

VFD GROUNDING DETAIL

SCALE: NONE

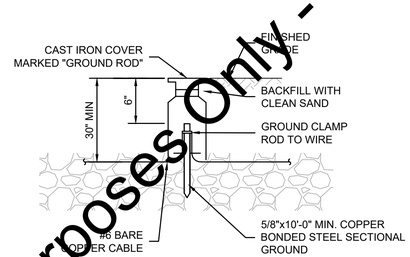

NOTES:

1. REFER TO JOB SPECIFICATION FOR MINIMUM SYSTEM RESISTANCE TO GROUND. IF THE RESISTANCE CANNOT BE MET WITH SINGLE 10'-0" RODS, ADD ADDITIONAL SECTIONS TO RODS OR ADD NEW RODS AS REQUIRED, SPACED 6'-0" TO 10'-0" FROM EXISTING RODS.

GROUND ROD ASSEMBLY

SCALE: NONE

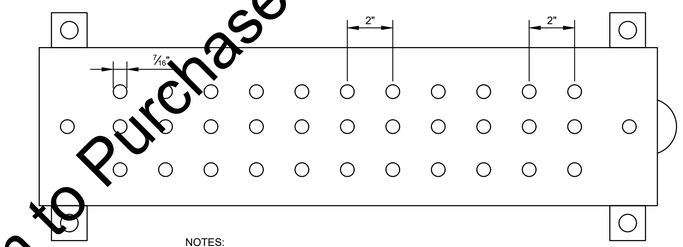

NOTES:

1. PROVIDE 1/4"DEEP X 4" HIGH X 2'-0" LONG COPPER GROUND BUS BAR WITH INSULATED WALL BRACKET ASSEMBLY. ERICO EGB-A-14-4-24-CC OR APPROVED EQUAL AS SPECIFIED. PRE DRILLED NEMA BOLT CONFIGURATION AS INDICATED. PROVIDE BRASS METAL NAME TAGS ON EACH GROUNDING CABLE INDICATING IDENTIFYING TAG OF EQUIPMENT BEING GROUNDED. TERMINATE GROUNDING CABLE WITH NEMA TWO-HOLE BOLTED LUG.
2. REFER TO EQUIPMENT PLANS FOR GROUNDING CABLE SIZES, QUANTITIES AND EQUIPMENT DESCRIPTIONS.

GROUND BUS BAR DETAIL

SCALE: NONE

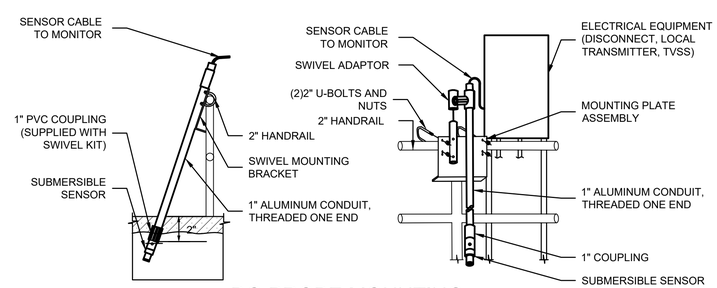

DO PROBE MOUNTING

SCALE: NONE

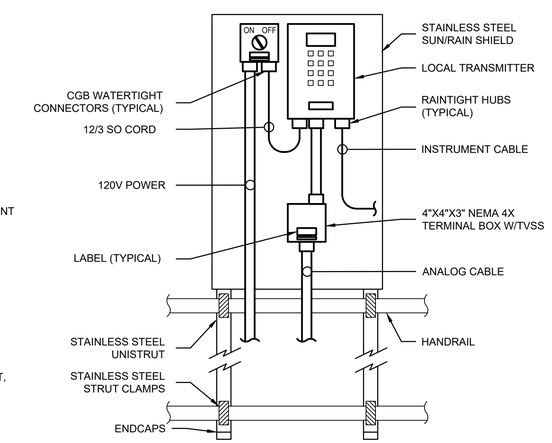

LOCAL TRANSMITTER MOUNTING

SCALE: NONE

SCALE VERIFICATION	DRAWN BY	EAS
BAR IS ONE INCH LONG ON ORIGINAL DRAWING	CHECKED BY	DRT
	APPROVED BY	WCM
	ISSUE DATE	MARCH 2020
	PROJECT NUMBER	193216-04-001

NO.	DATE	INITIALS	REVISION DESCRIPTIONS

WAYNE C. MOORE REGISTERED No. 10707476 STATE OF INDIANA PROFESSIONAL ENGINEER 03/04/2020

WESSLER ENGINEERING
More than a Project™

WASTEWATER SYSTEM EXPANSION

CITY OF FRANKFORT, INDIANA
CONTRACT A - WASTEWATER TREATMENT PLANT

ELECTRICAL DETAILS

SHEET NO. **16E4**

PAGE NO. 200

"For Viewing Purposes Only - Visit wesslerengineering.com to Purchase"

Drawing: J:\Frankfort\Projects\193216 Frankfort WWTP Exp\CAD 04-001\DWG\Sheets\Area 17 - Elec\16E ELECT PANEL SCHEDULES.dwg | Layout: 16E4 | Plotted: 03/04/20 @ 01:29:50 | LastSavedBy: MikeN

EROSION CONTROL SCHEDULE

CONSTRUCTION ACTIVITY	SCHEDULE CONSIDERATION
NOTIFY IDEM RULE 5 COORDINATOR (317-233-1864) AND CLINTON COUNTY SWCD (765-659-1223) TWO WORKING DAYS PRECEDING THE BEGINNING OF STARTING CONSTRUCTION.	WITHIN 48 HOURS PRIOR TO STARTING CONSTRUCTION.
CONSTRUCTION ACCESS - ENTRANCE TO SITE, CONSTRUCTION ROUTES, AREAS DESIGNATED FOR EQUIPMENT PARKING OR MATERIAL STAGING.	THIS IS THE FIRST LAND-DISTURBING ACTIVITY. AS SOON AS CONSTRUCTION BEGINS, STABILIZE ANY BARE AREAS WITH AGGREGATE AND TEMPORARY VEGETATION.
SEDIMENT TRAPS AND BARRIERS - BASIN TRAPS, SILT FENCE.	AFTER CONSTRUCTION IS ACCESSED, BASINS SHALL BE INSTALLED, WITH THE ADDITION OF MORE TRAPS AND BARRIERS AS NEEDED DURING GRADING.
RUNOFF CONTROL - DIVERSIONS, PERIMETER PROTECTION, CHECK DAMS, OUTLET PROTECTION.	RUNOFF CONTROL PRACTICES SHALL BE INSTALLED AFTER THE INSTALLATION OF SEDIMENT TRAPS AND BEFORE LAND GRADING. ADDITIONAL RUNOFF CONTROL MEASURES MAY BE INSTALLED DURING GRADING.
RUNOFF CONVEYANCE SYSTEM - STABILIZE STREAM BANKS, STORM DRAINS, CHANNELS, INLET AND OUTLET PROTECTION, SLOPE DRAINS.	AS NECESSARY, STABILIZE STREAM BANKS AND SIDE SLOPES OF RUNOFF SYSTEMS AS SOON AS POSSIBLE. USE EROSION CONTROL BLANKETS OR SLOPE DRAINS TO PREVENT EROSION. INSTALL INLET PROTECTION TO PREVENT SEDIMENTS FROM ENTERING STORM DRAINAGE SYSTEMS. PROTECT STORM OUTLETS TO PREVENT EROSION.
LAND CLEARING AND GRADING - SITE PREPARATION (CUTTING, FILLING, AND GRADING, SEDIMENT TRAPS, BARRIERS, DIVERSIONS, DRAINS, SURFACE ROUGHENING).	IMPLEMENT CLEARING AND GRADING AFTER INSTALLATION OF SEDIMENT TRAPS AND RUNOFF CONTROL MEASURES, AND INSTALL ADDITIONAL CONTROL MEASURES AS GRADING CONTINUES. CLEAR BORROW AND DISPOSAL AREAS AS NEEDED, AND MARK TREES AND BUFFER AREAS FOR PRESERVATION.
SURFACE STABILIZATION - TEMPORARY AND PERMANENT SEEDING, MULCHING, SODDING, RIPRAP, EROSION CONTROL BLANKET.	APPLY TEMPORARY OR PERMANENT STABILIZING MEASURES IMMEDIATELY TO ANY DISTURBED AREAS WHERE WORK HAS BEEN EITHER COMPLETED OR DELAYED.
CONSTRUCTION - STRUCTURES, UTILITIES, PAVING.	DURING CONSTRUCTION, INSTALL ANY EROSION AND SEDIMENTATION CONTROL MEASURES THAT ARE NEEDED.
LANDSCAPING AND FINAL STABILIZATION - TOPSOILING, TREES AND SHRUBS, PERMANENT SEEDING, MULCHING, SODDING, RIPRAP.	THIS IS THE LAST CONSTRUCTION PHASE. STABILIZE ALL DISTURBED AREAS, INCLUDING BORROW AND SPOIL AREAS, AND REMOVE ALL TEMPORARY CONTROL MEASURES. A UNIFORM DENSITY OF 70% VEGETATED COVER IS REQUIRED.

EROSION CONTROL SCHEDULE

SCALE: NONE

SEASONAL SOIL PROTECTION CHART

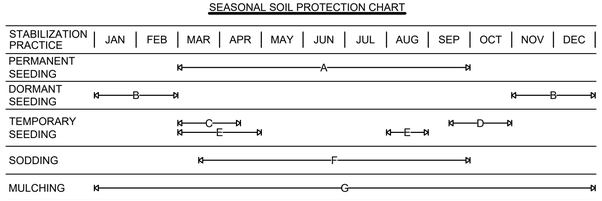

A. = KENTUCKY BLUEGRASS 40 LB/ACRE
B. = KENTUCKY BLUEGRASS 210 LB/ACRE
C. = SPRING OATS 100 LB/ACRE (1" PLANTING DEPTH)
D. = WHEAT OR RYE 150 LB/ACRE (1" - 1.5" PLANTING DEPTH)
E. = ANNUAL RYEGRASS 40 LB/ACRE (1/4" PLANTING DEPTH)
F. = SOD
G. = ANCHORED STRAW/HAY (2 TONS/ACRE) OR WOOD FIBER/CELLULOSE (1 TON/ACRE)

NOTES:
1. IRRIGATION NEEDED DURING MAY THROUGH SEPTEMBER.
2. IRRIGATION NEEDED FOR 2 TO 3 WEEKS AFTER APPLYING SOD.
3. ANCHORED MULCH IS REQUIRED FOR PERMANENT, DORMANT AND TEMPORARY SEEDING.
4. OPTIMUM SEEDING DATES PROVIDED. DATES MAY BE EXTENDED OR SHORTENED BASED ON PROJECT LOCATION.
5. SEED MIXTURES PROVIDED FOR LAWNS AND HIGH MAINTENANCE AREAS.

MAINTENANCE:
1. INSPECT WITHIN 24 HOURS OF EACH RAIN EVENT AND AT LEAST ONCE EVERY 7 CALENDAR DAYS.
2. CHECK FOR EROSION AND MOVEMENT OF MULCH AND REPAIR IMMEDIATELY.
3. MONITOR FOR EROSION DAMAGE AND ADEQUATE COVER (70% DENSITY).
4. RESEED, FERTILIZE OR APPLY MULCH WHERE NECESSARY.

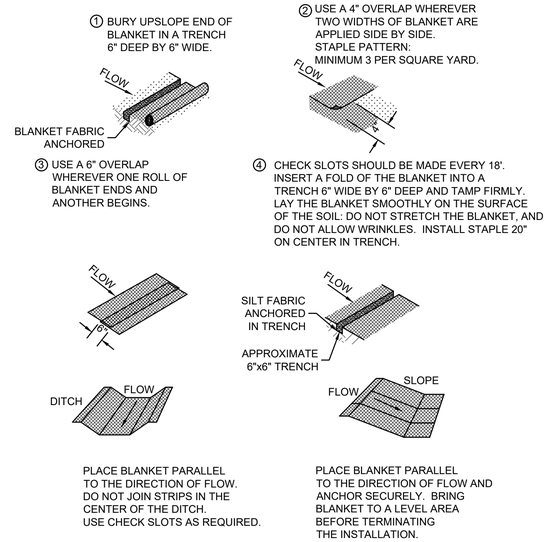

PRODUCT:
1. NORTH AMERICAN GREEN SC150, OR EQUAL.

NOTES:
1. PROTECT THE SLOPES WITH AN EROSION CONTROL BLANKET WHERE CONSTRUCTION DISTURBS SLOPES EQUAL OR STEEPER THAN 3:1.

MAINTENANCE:
1. INSPECT FOR EROSION AFTER EACH STORM EVENT DURING VEGETATION ESTABLISHMENT, AND AT LEAST ONCE EVERY 7 CALENDAR DAYS.
2. IF ANY AREAS SHOW EROSION, PULL BACK THAT PORTION OF THE SOIL, RESEED, RELAY AND STAPLE THE BLANKET.
3. CHECK AREAS PERIODICALLY AFTER VEGETATION ESTABLISHMENT.

BLANKET ADD

EROSION CONTROL BLANKET

SCALE: NONE

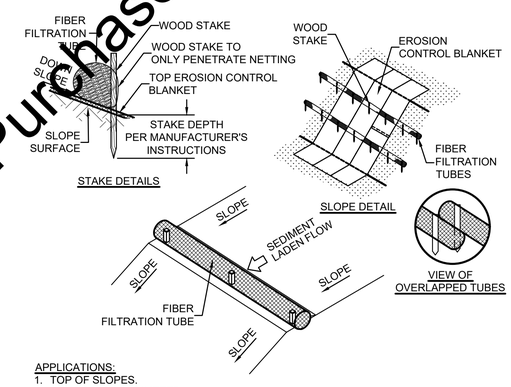

APPLICATIONS:
1. TOP OF SLOPES.
2. AT PROJECT PERIMETER.

INSTALLATION:
1. INSTALL IN ACCORDANCE WITH MANUFACTURER'S INSTRUCTIONS.
2. USE THE APPROPRIATE SIZE, LENGTH AND DISTANCE BETWEEN TUBES AS SPECIFIED BY THE MANUFACTURER.
3. ENTRENCH PER MANUFACTURER'S INSTRUCTIONS.

MAINTENANCE:
1. REMOVE ALL ACCUMULATED SEDIMENT WHEN IT REACHES 1/4 THE HEIGHT OF THE TUBE.
2. REPAIR ERODED AND DAMAGED AREAS.
3. IF PONDING BECOMES EXCESSIVE DUE TO REDUCED FILTERING CAPACITY, REMOVE THE TUBE AND EITHER RECONSTRUCT OR REPLACE WITH NEW PRODUCT.
4. INSPECT WITHIN 24 HOURS OF A RAIN EVENT AND AT LEAST ONCE EVERY 7 CALENDAR DAYS.

FIBER FILTRATION TUBES - SLOPE

SCALE: NONE

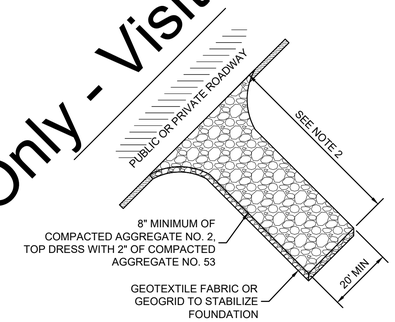

NOTES:
1. PLACE CONSTRUCTION ENTRANCE AS SHOWN ON THE PLANS AND AT ALL TEMPORARY CONSTRUCTION DRIVES THAT ARE INSTALLED.
2. FOR LARGE SITES (2 ACRES OR LARGER) THE MINIMUM LENGTH IS 150'. FOR SMALLER SITES (LESS THAN 2 ACRES) THE MINIMUM LENGTH IS 50'.
3. PROVIDE CULVERT OR OTHER METHODS AS NECESSARY TO MAINTAIN POSITIVE DRAINAGE.

MAINTENANCE:
1. INSPECT DAILY AND REPLACE DISPLACED STONE.
2. IMMEDIATELY REMOVE MUD AND SEDIMENT TRACKED ONTO ADJACENT ROADWAY.
3. RESHAPE PAD AS NEEDED FOR DRAINAGE AND RUNOFF CONTROL.
4. AT COMPLETION OF PROJECT COMPLETELY REMOVE AND RESTORE SITE TO ORIGINAL CONDITIONS, OR AS APPLICABLE USE FOR BASE OF NEW PERMANENT DRIVE, MAINTAINING DESIGN ELEVATIONS AND SECTION.

CONSTRUCTION ENTRANCE

SCALE: NONE

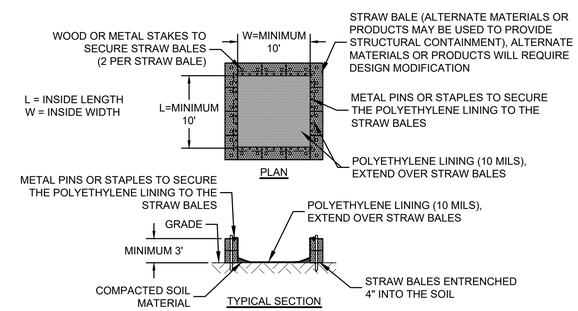

NOTES:
1. LOCATE WASHOUTS AT LEAST 50' FROM ANY CREEKS, WETLANDS, DITCHES, KARST FEATURES, OR STORM DRAIN/CONVEYANCES.

WASHOUT PROCEDURES:
1. DO NOT LEAVE EXCESS MUD IN THE CHUTES OR HOPPER AFTER POURING CONCRETE. MAKE EVERY EFFORT TO EMPTY THE CHUTE AND HOPPER AT THE POUR. THE LESS MATERIAL LEFT IN THE CHUTES AND HOPPER, THE QUICKER AND EASIER THE CLEANOUT. SMALL AMOUNTS OF EXCESS CONCRETE (NOT WASHOUT WATER) MAY BE DISPOSED OF IN AREAS THAT WILL NOT FLOW TO AN AREA THAT IS TO BE PROTECTED.
2. SCRAPE AS MUCH MATERIAL FROM THE CHUTES AS POSSIBLE BEFORE WASHING THEM. USE NON-WATER CLEANING METHODS TO MINIMIZE THE CHANCE FOR WASTE TO FLOW OFF SITE.
3. STOP WASHING OUT IN AN AREA IF YOU OBSERVE WATER RUNNING OFF THE DESIGNATED AREA OR IF THE WATER IS NOT BEING CONTAINED WITHIN THE WASHOUT AREA.
4. DO NOT BACK FLUSH EQUIPMENT AT THE PROJECT SITE.
5. DO NOT USE ADDITIVES WITH WASH WATER.
6. DO NOT WASH OUT OR DRAIN WASTE WATERS TO STORM DRAINS, WETLANDS, STREAMS, RIVERS, CREEKS, DITCHES OR STREETS.

MAINTENANCE:
1. MAINTENANCE REQUIREMENTS PROVIDED IN SPECIFICATIONS.

CONCRETE WASHOUT

SCALE: NONE

"For Viewing Purposes Only - Visit wesslerengineering.com to Purchase"

SCALE VERIFICATION	DRAWN BY	DLT
BAR IS ONE INCH LONG ON ORIGINAL DRAWING	CHECKED BY	ALT
	APPROVED BY	RWH
	ISSUE DATE	MARCH 2020
	PROJECT NUMBER	193216-04-001

NO.	DATE	INITIALS	REVISION DESCRIPTIONS

ROBERT W. HOLDEN JR. REGISTERED No. 10000096 STATE OF INDIANA PROFESSIONAL ENGINEER
03/04/2020

WESSLER ENGINEERING
More than a Project™

WASTEWATER SYSTEM EXPANSION
CITY OF FRANKFORT, INDIANA
CONTRACT A - WASTEWATER TREATMENT PLANT

EROSION CONTROL DETAILS

SHEET NO. **16EC1**

PAGE NO. 201

Drawing: J:\Frankfort\Projects\193216 Frankfort WWTP Exp\CAD 04-001\DWG\Sheets\Area 16 - MD\16C-EC DTLS - PART A.dwg | Layout: 16EC1 - EROSION CONTROL DETAILS | Plotted: 02/28/20 @ 12:46:49 | LastSavedBy: MikeN

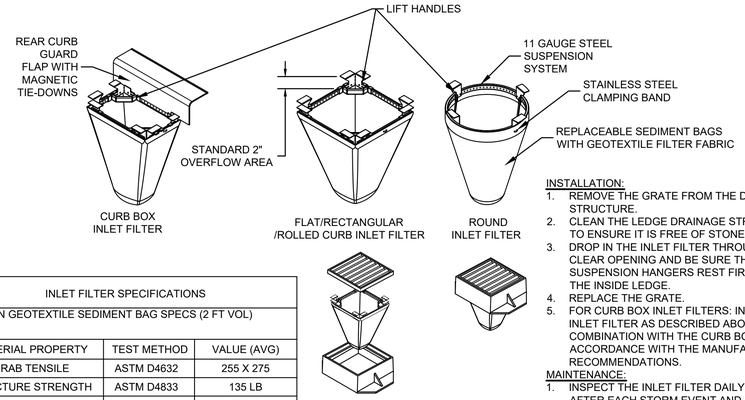

INLET FILTER SPECIFICATIONS		
WOVEN GEOTEXTILE SEDIMENT BAG SPECS (2 FT VOL)		
MATERIAL PROPERTY	TEST METHOD	VALUE (AVG)
GRAB TENSILE	ASTM D4632	255 X 275
PUNCTURE STRENGTH	ASTM D4833	135 LB
TRAPEZOIDAL TEAR	ASTM D4533	75 LB
UV RESISTANCE	ASTM D4355	90%
APP OPEN SIZE (AOS)	ASTM D4751	NO. 20 SIEVE
PERMITTIVITY	ASTM D4491	1.5 S^{-1}
WATER FLOW RATE	ASTM D4491	200 GPM/SQFT
SEDIMENT REMOVAL EFFICIENCY (8% MIX)	ASTM D7351	82%

SOURCE: FLEX STORM INLET FILTER

INSTALLATION:
1. REMOVE THE GRATE FROM THE DRAINAGE STRUCTURE.
2. CLEAN THE LEDGE DRAINAGE STRUCTURE TO ENSURE IT IS FREE OF STONE AND DIRT.
3. DROP IN THE INLET FILTER THROUGH THE CLEAR OPENING AND BE SURE THE SUSPENSION HANGERS REST FIRMLY ON THE INSIDE LEDGE.
4. REPLACE THE GRATE.
5. FOR CURB BOX INLET FILTERS: INSERT INLET FILTER AS DESCRIBED ABOVE IN COMBINATION WITH THE CURB BOX FLAP IN ACCORDANCE WITH THE MANUFACTURER'S RECOMMENDATIONS.

MAINTENANCE:
1. INSPECT THE INLET FILTER DAILY AND AFTER EACH STORM EVENT AND EMPTY IF THE SEDIMENT BAG IS MORE THAN HALF FILLED WITH SEDIMENT AND DEBRIS, OR AS DIRECTED BY THE ENGINEER.
2. REMOVE THE GRATE AND LIFT THE INLET FILTER FROM THE DRAINAGE STRUCTURE. DISPOSE OF ACCUMULATED SEDIMENTS AND DEBRIS PROPERLY. MATERIAL SHALL NOT BE DISCHARGED TO THE STORM SEWER SYSTEM.
3. REMOVE ANY CAKED ON SILT FROM THE SEDIMENT BAG AND REVERSE FLUSH THE BAG FOR OPTIMAL FILTRATION.
4. REPLACE THE BAG IF THE INNER FILTER MEMBRANE IS TORN.

INLET PROTECTION
SCALE: NONE

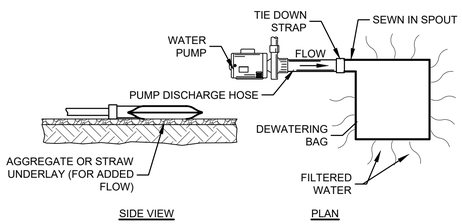

MECHANICAL PROPERTIES	TEST METHOD	UNITS	INDUSTRY STANDARD
GRAB TENSILE STRENGTH	ASTM D4632	kN (LB)	0.9 (205) X 0.9 (205)
GRAB TENSILE ELONGATION	ASTM D4632	%	50 X 50
PUNCTURE STRENGTH	ASTM D4833	kN (LB)	0.58 (130)
MULLEN BURST STRENGTH	ASTM D3786	kPa (PSI)	2618 (380)
TRAPEZOID TEAR STRENGTH	ASTM D4533	kN (LB)	0.36 (80) X 0.36 (80)
UV RESISTANCE	ASTM D4355	%	70
APPARENT OPENING SIZE	ASTM D4751	Mm (US STD SIEVE)	0.180 (80)
FLOW RATE	ASTM D4491	1/MIN/M² (GAL/MIN/FT²)	3866 (95)
PERMITTIVITY	ASTM D4491	S^{-1}	1.2

MAINTENANCE:
1. DURING THE ACTIVE DEWATERING PROCESS, INSPECTION OF THE PUMPING BAG SHOULD BE REVIEWED FREQUENTLY. SPECIAL ATTENTION SHOULD BE PAID TO THE BUFFER AREA FOR ANY SIGN OF EROSION AND CONCENTRATION OF FLOW. OBSERVE WHERE POSSIBLE THE VISUAL QUALITY OF THE EFFLUENT AND DETERMINE IF ADDITIONAL TREATMENT CAN BE PROVIDED.
2. DISPOSE OF ACCUMULATED SEDIMENT REMOVED DURING PUMPING OPERATIONS IN CONFORMANCE WITH THE SPECIFICATIONS.
3. REPLACE THE BAG OR DISPOSE OF SILT WHEN HALF FULL OF SEDIMENT OR WHEN SEDIMENT HAS REDUCED THE FLOW RATE TO AN IMPRACTICAL RATE.

SOURCE:
KRISTAR
DANDY DEWATERING BAG
SEDCATCH

PUMPING BAG
SCALE: NONE

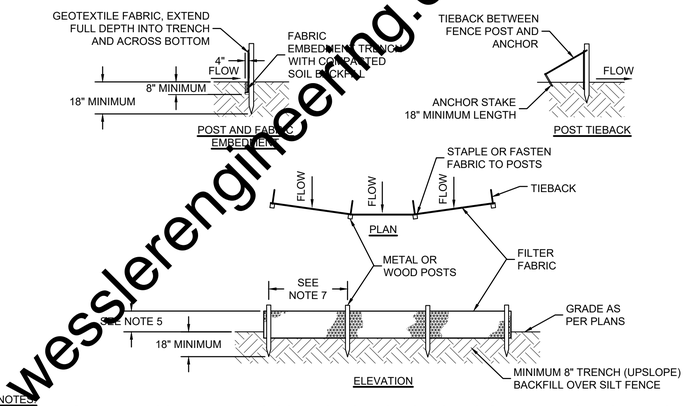

NOTES:
1. SYNTHETIC FILTER FABRIC SHALL BE A PERVIOUS SHEET OF WOVEN OR NON-WOVEN GEOTEXTILE FABRIC AND SHALL BE CERTIFIED BY THE MANUFACTURER OR SUPPLIER AS CONFORMING TO THE FOLLOWING REQUIREMENTS:
   a. TEXTILE STRENGTH AT 20% (MAXIMUM) ELONGATION, PER ASTM D4632.
   b. WOVEN EXTRA STRENGTH - 50 LB/LINEAR INCH (MINIMUM), NON-WOVEN EXTRA STRENGTH - 70 LB/INCH (MINIMUM).
   c. WOVEN STANDARD STRENGTH - 30 LB/LINEAR INCH (MINIMUM), NON-WOVEN STANDARD STRENGTH - 50 LB/INCH (MINIMUM).
   d. APPARENT OPENING SIZE (AOS) (U.S. SIEVE) - NO. 30 PARTICLE SIZE OF 0.6 mm (MAXIMUM), ASTM D4751.
   e. PERMITTIVITY - 0.05 S^{-1} (MAXIMUM), ASTM D4491.
2. POSTS FOR SILT FENCES SHALL BE EITHER 2"X2" SQUARE WOOD OR EQUIVALENT METAL POSTS WITH A MINIMUM LENGTH OF 5'. METAL POSTS SHALL HAVE PROJECTIONS FOR FASTENING WIRE TO THEM.
3. ANCHOR STAKES FOR SILT FENCES SHALL BE 1"x2" WOOD (PREFERRED) OR EQUIVALENT METAL WITH A MINIMUM LENGTH OF 18".
4. WIRE FENCE REINFORCEMENT FOR SILT FENCES USING STANDARD STRENGTH FILTER CLOTH SHALL BE A MINIMUM OF 42" IN HEIGHT, A MINIMUM OF 14 GAUGE, AND SHALL HAVE A MAXIMUM MESH SPACING OF 6".
5. THE HEIGHT OF THE BARRIER SHALL BE A MINIMUM OF 18" AND A MAXIMUM OF 30".
6. THE FABRIC SHALL BE PURCHASED IN A CONTINUOUS ROLL CUT TO THE LENGTH OF THE BARRIER TO AVOID THE USE OF JOINTS. WHEN JOINTS ARE NECESSARY, FILTER FABRIC SHALL BE SPLICED TOGETHER ONLY AT A SUPPORT POST, WITH A MINIMUM 6" OVERLAP, AND SECURELY SEALED.
7. POSTS SHALL BE SPACED A MAXIMUM OF 6' APART AT THE BARRIER LOCATION AND DRIVEN SECURELY INTO THE GROUND (MINIMUM OF 18"). WHEN STANDARD STRENGTH FABRIC IS USED WITH THE WIRE SUPPORT FENCE, POST SPACING SHALL NOT EXCEED 8'.
8. THE SPACING OF TIEBACKS SHALL EQUAL THE SPACING OF THE POSTS. ADDITIONAL POST DEPTH OR TIEBACKS MAY BE REQUIRED IN UNSTABLE SOILS.
9. A TRENCH SHALL BE EXCAVATED APPROXIMATELY 4" WIDE AND A MINIMUM OF 8" DEEP ALONG THE LINE OF POSTS AND UPSLOPE FROM THE BARRIER.
10. WHEN STANDARD STRENGTH FILTER FABRIC IS USED WITH A WIRE MESH SUPPORT FENCE IT SHALL BE FASTENED SECURELY TO THE UPSLOPE SIDE OF THE POSTS USING HEAVY DUTY 1" WIRE STAPLES, TIE WIRES OR HOG RINGS. THE WIRE SHALL EXTEND INTO THE TRENCH A MINIMUM OF 2" AND SHALL NOT EXTEND MORE THAN 36" ABOVE THE ORIGINAL GROUND SURFACE.
11. THE STANDARD STRENGTH FILTER FABRIC, WITHOUT A WIRE MESH SUPPORT FENCE, SHALL BE STAPLED OR WIRED TO THE FENCE, AND A MINIMUM 8" OF THE FABRIC SHALL BE EXTENDED INTO THE TRENCH. THE FABRIC SHALL NOT EXTEND MORE THAN 36" ABOVE THE ORIGINAL GROUND SURFACE. DO NOT STAPLE FILTER FABRIC TO EXISTING TREES.
12. WHEN EXTRA STRENGTH FILTER FABRIC OR BURLAP AND POST SPACING IS LESS THAN THE MAXIMUM SPECIFIED SPACING OF 6', THE WIRE MESH SUPPORT FENCE MAY BE ELIMINATED.
13. BACKFILL THE TRENCH AND COMPACT THE SOIL OVER THE FILTER FABRIC.
14. REMOVE SILT FENCES WHEN THEY HAVE SERVED THEIR USEFUL PURPOSE, BUT NOT BEFORE THE UPSLOPE AREA HAS BEEN PERMANENTLY STABILIZED.
15. SILT FENCE SHALL NOT BE USED AS A DIVERSION AND SHALL NOT BE INSTALLED ACROSS A STREAM, CHANNEL, DITCH, SWALE, ETC.

MAINTENANCE:
1. INSPECT AFTER EACH RAINFALL AND DAILY DURING PROLONGED RAINFALL. INSPECT AT LEAST ONCE EVERY 7 CALENDAR DAYS.
2. REPLACE OR REPAIR FABRIC IMMEDIATELY IF IT DECOMPOSES OR IS INEFFECTIVE.
3. SEDIMENT DEPOSITS SHOULD BE REMOVED AFTER EACH STORM EVENT. THEY MUST BE REMOVED WHEN DEPOSITS REACH APPROXIMATELY HALF THE HEIGHT OF THE BARRIER.
4. SPREAD ANY SEDIMENT DEPOSITS REMAINING IN PLACE AFTER THE SILT FENCE IS NO LONGER REQUIRED AND DRESS TO CONFORM WITH THE FINISHED GRADING.

SILT FENCE
SCALE: NONE

"For Viewing Purposes Only - Visit wesslerengineering.com to Purchase"

SCALE VERIFICATION	DRAWN BY	DLT
BAR IS ONE INCH LONG ON ORIGINAL DRAWING	CHECKED BY	ALT
	APPROVED BY	RWH
	ISSUE DATE	MARCH 2020
	PROJECT NUMBER	193216-04-001

NO.	DATE	INITIALS	REVISION DESCRIPTIONS

ROBERT W. HOLDEN, II REGISTERED No. 10000096 STATE OF INDIANA PROFESSIONAL ENGINEER 03/04/2020

WESSLER ENGINEERING
More than a Project™

WASTEWATER SYSTEM EXPANSION
CITY OF FRANKFORT, INDIANA
CONTRACT A - WASTEWATER TREATMENT PLANT

EROSION CONTROL DETAILSNEW GRADING PLAN

SHEET NO. **16EC2**
PAGE NO. 202

Drawing: J:\Frankfort\Projects\193216 Frankfort WWTP Exp\CAD 04-001\DWG\Sheets\Area 16 - MD\16C-EC DTLS - PART A.dwg | Layout: 16EC2 - EROSION CONTROL DETAILS | Plotted: 02/28/20 @ 12:46:50 | LastSavedBy: MikeN

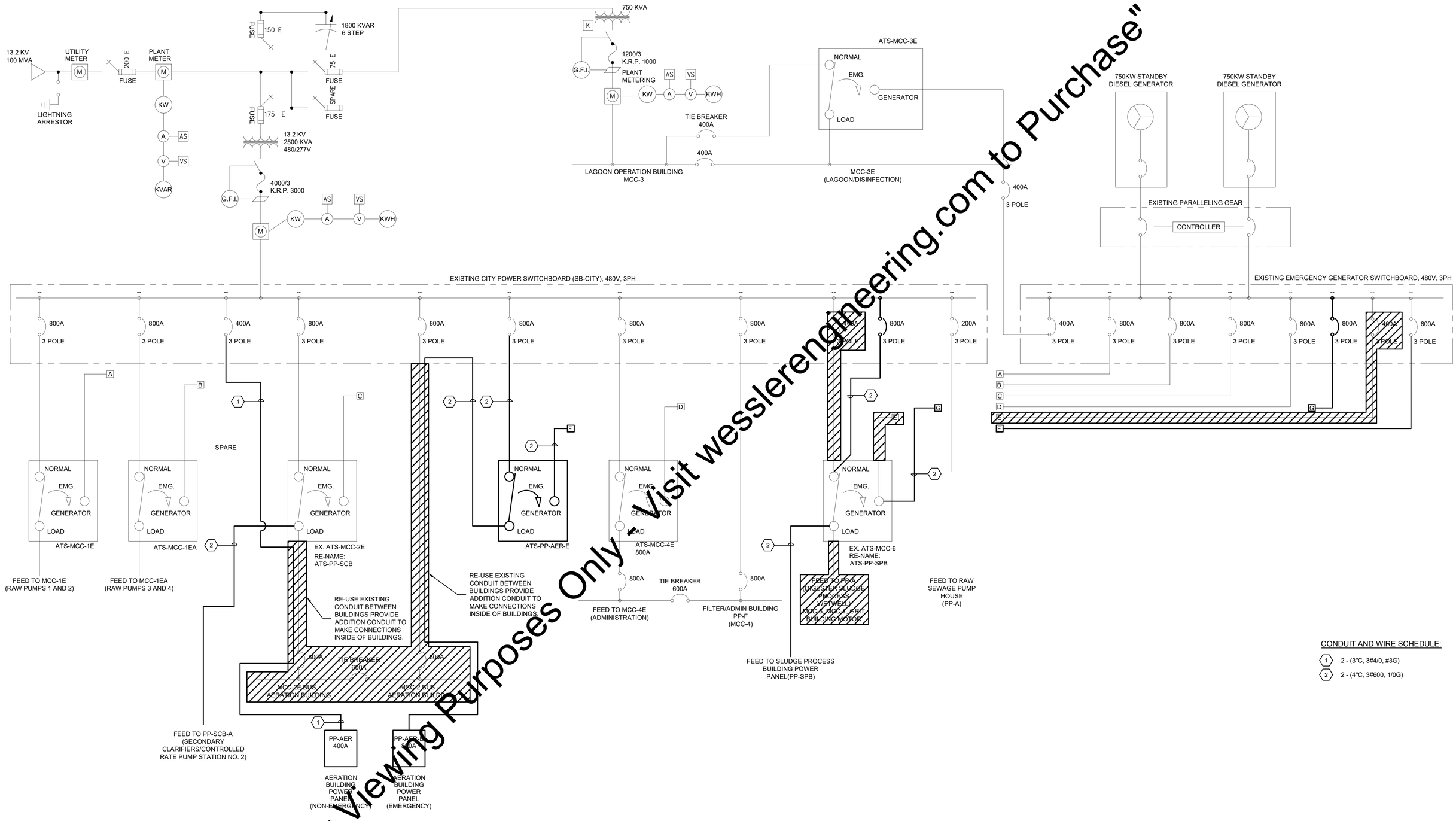

CONDUIT AND WIRE SCHEDULE:

1 - 2 - (3"C, 3#4/0, #3G)

2 - 2 - (4"C, 3#600, 1/0G)

"For Viewing Purposes Only - Visit wesslerengineering.com to Purchase"

SCALE VERIFICATION	DRAWN BY	EAS
BAR IS ONE INCH LONG ON ORIGINAL DRAWING	CHECKED BY	DRT
	APPROVED BY	WCM
	ISSUE DATE	MARCH 2020
	PROJECT NUMBER	193216-04-001

NO.	DATE	INITIALS	REVISION DESCRIPTIONS

WAYNE C. MOORE REGISTERED No. 10707476 STATE OF INDIANA PROFESSIONAL ENGINEER 03/04/2020

WESSLER ENGINEERING
More than a Project™

WASTEWATER SYSTEM EXPANSION

CITY OF FRANKFORT, INDIANA

CONTRACT A - WASTEWATER TREATMENT PLANT

OVERALL ELECTRICAL ONE-LINE

SHEET NO.
17E1

PAGE NO.
203

Drawing: J:\Frankfort\Projects\193216 Frankfort WWTP Exp\CAD 04-001\DWG\Sheets\Area 17 - Elec\17e elect one-line diagram #1.dwg | Layout: 17E1 | Plotted: 03/04/20 @ 08:38:57 | LastSavedBy: RyanM

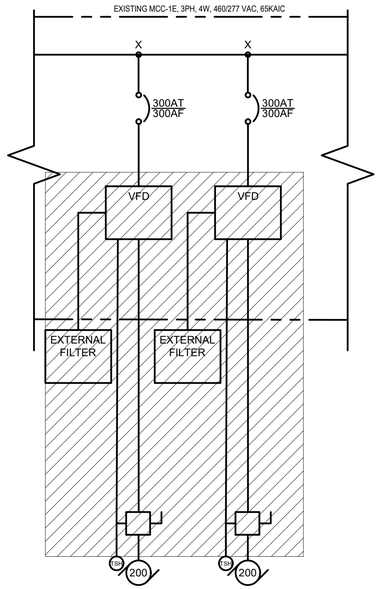

EXISTING MCC-1E DEMO ONE-LINE DIAGRAM

SCALE: NONE

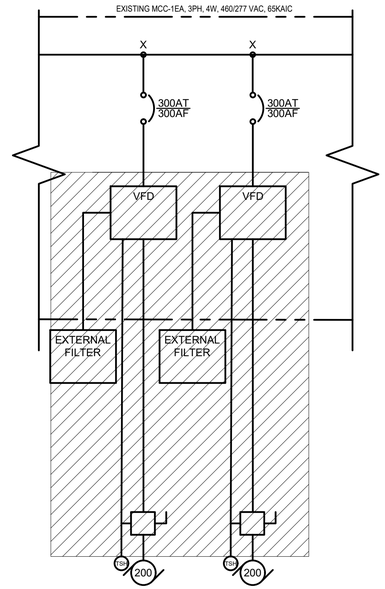

EXISTING MCC-1EA DEMO ONE-LINE DIAGRAM

SCALE: NONE

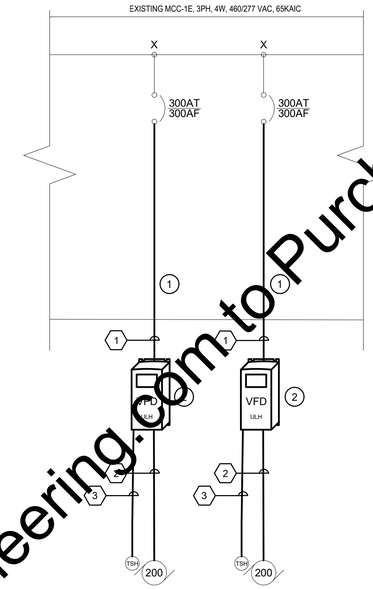

EXISTING MCC-1E MODIFICATION ONE-LINE DIAGRAM

SCALE: NONE

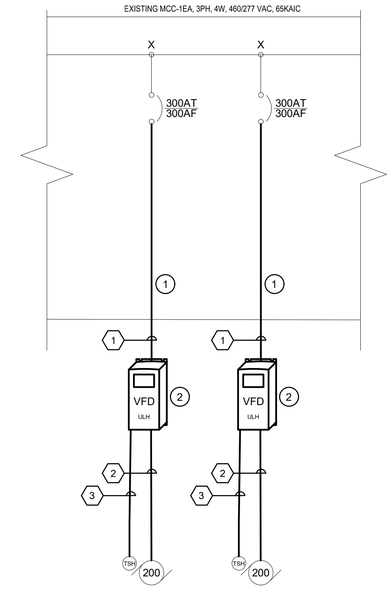

EXISTING MCC-1EA MODIFICATION ONE-LINE DIAGRAM

SCALE: NONE

KEY NOTES

1. CONTRACTOR MAY REUSE CONDUIT FROM MCC INTO LOWER LEVEL
2. VFD SHALL BE LOW HARMONIC TYPE

CONDUIT AND WIRE SCHEDULE:

1. 3"C, 3#350, #4G
2. 3"C, 3#350, #350G
3. SEE CONTROL ONE-LINE DIAGRAM

"For Viewing Purposes Only - Visit wesslerengineering.com to Purchase"

SCALE VERIFICATION	DRAWN BY	EAS
BAR IS ONE INCH LONG ON ORIGINAL DRAWING	CHECKED BY	DRI
	APPROVED BY	WCM
	ISSUE DATE	MARCH 2020
	PROJECT NUMBER	193216-04-001

NO.	DATE	INITIALS	REVISION DESCRIPTIONS

WAYNE C. MOORE REGISTERED No. 10707476 STATE OF INDIANA PROFESSIONAL ENGINEER 03/04/2020

WESSLER ENGINEERING
More than a Project™

WASTEWATER SYSTEM EXPANSION

CITY OF FRANKFORT, INDIANA
CONTRACT A - WASTEWATER TREATMENT PLANT

17E ELECT ONE-LINE DIAGRAM #1

SHEET NO. **17E2**

PAGE NO. 204

Drawing: J:\Frankfort\Projects\193216 Frankfort WWTP Exp\CAD 04-001\DWG\Sheets\Area 17 - Elec\17e elect one-line diagram #1.dwg | Layout: 17E2 | Plotted: 03/04/20 @ 08:39:18 | LastSavedBy: RyanM

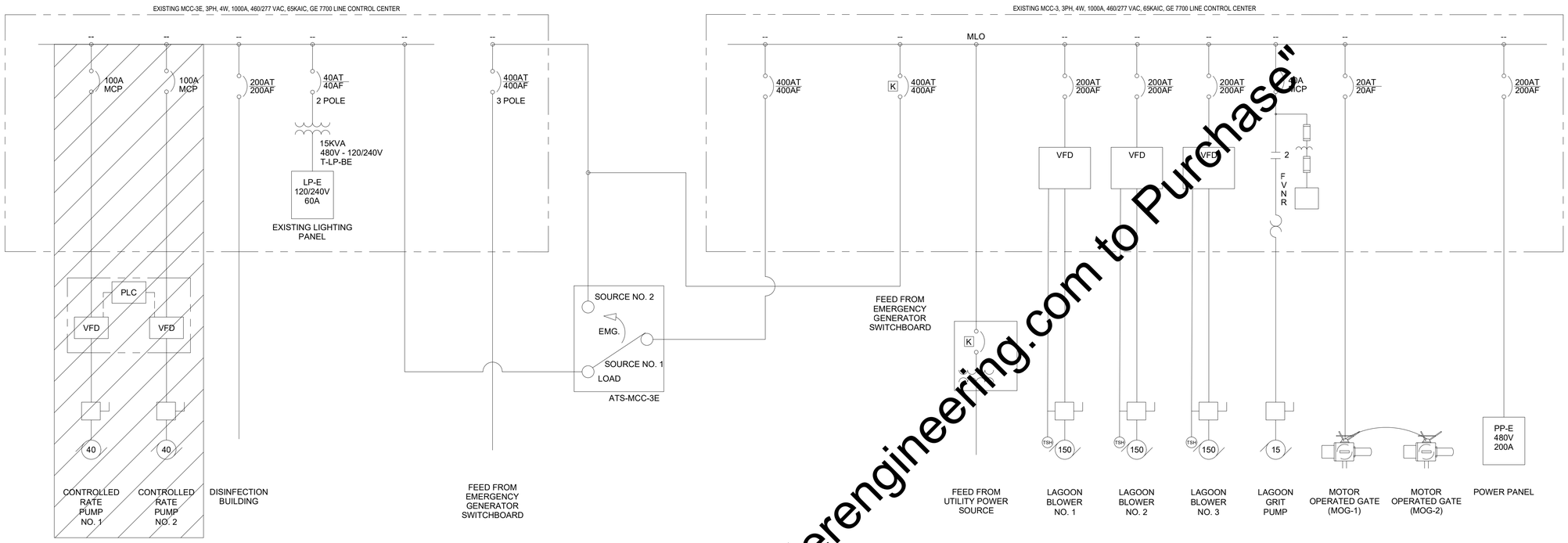

EXISTING MCC-3 AND MCC-3E DEMO ONE-LINE DIAGRAM

SCALE: NONE

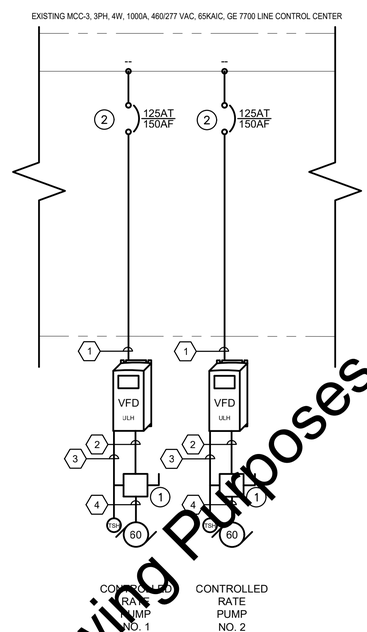

EXISTING MCC-3E MODIFICATIONS ONE-LINE DIAGRAM

SCALE: NONE

KEYED NOTES:

1. 100A, 480V, 3-POLE, NEMA 4X, SST, NFSS
2. PROVIDE NEW CIRCUIT BREAKERS

CONDUIT AND WIRE SCHEDULE:

1. 2"C, 3#1, #6G
2. 2"C, 3#1, #1G
3. SEE CONTROL ONE-LINE DIAGRAM
4. 2"C, MANUFACTURES CABLE

"For Viewing Purposes Only - Visit wesslerengineering.com to Purchase"

SCALE VERIFICATION	DRAWN BY	EAS
BAR IS ONE INCH LONG ON ORIGINAL DRAWING	CHECKED BY	DRI
	APPROVED BY	WCM
	ISSUE DATE	MARCH 2020
	PROJECT NUMBER	193216-04-001

NO.	DATE	INITIALS	REVISION DESCRIPTIONS

WAYNE C. MORE REGISTERED No. 10707476 STATE OF INDIANA PROFESSIONAL ENGINEER 03/04/2020

WESSLER ENGINEERING
More than a Project™

WASTEWATER SYSTEM EXPANSION

CITY OF FRANKFORT, INDIANA
CONTRACT A - WASTEWATER TREATMENT PLANT

EXISTING LAGOON PUMP STATION ONE-LINE DIAGRAM

SHEET NO. **17E3**

PAGE NO. 205

Drawing: J:\Frankfort\Projects\193216 Frankfort WWTP Exp\CAD 04-001\DWG\Sheets\Area 17 - Elec\17e elect one-line diagram #1.dwg | Layout: 17E3 | Plotted: 03/04/20 @ 08:39:33 | LastSavedBy: RyanM

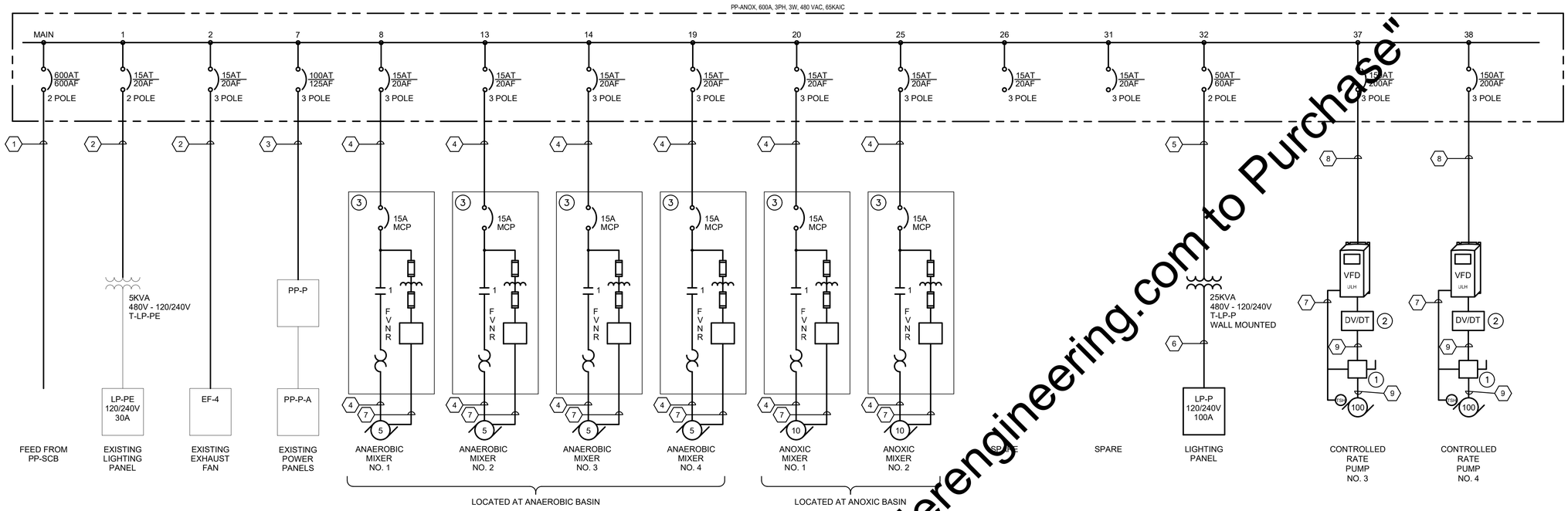

KEYED NOTES:

1. 200A, 480V, 3-POLE, NEMA 4X, SST, NFSS
2. V1K DV/DT FILTER, SIZE AS REQUIRED PER MOTOR LOAD
3. COMBINATION MOTOR STARTER, NEMA SIZE 1, NEMA 4X, SST ENCLOSURE, OVERSIZE ENCLOSURE TO INCLUDE MIXER PROTECTION RELAY.

CONDUIT AND WIRE SCHEDULE:

1. SEE OVERALL ONE-LINE DIAGRAM
2. 3/4"C, 3#12, #12G
3. 2"C, 3#2, #8G
4. 1"C, 3#10, #10G
5. 1"C, 2#6, #10G
6. 2"C, 2#2, #2N, #8G
7. SEE CONTROL ONE-LINE DIAGRAM
8. 3"C, 3#2/0, #6G
9. 3"C, 3#2/0, #2/0G
10. CABLE BY MANUFACTURER

"For Viewing Purposes Only - Visit wesslerengineering.com to Purchase"

SCALE VERIFICATION	DRAWN BY	EAS
BAR IS ONE INCH LONG ON ORIGINAL DRAWING	CHECKED BY	DRI
	APPROVED BY	WCM
	ISSUE DATE	MARCH 2020
	PROJECT NUMBER	193216-04-001

NO.	DATE	INITIALS	REVISION DESCRIPTIONS

WAYNE C. MORE REGISTERED No. 10707476 STATE OF INDIANA PROFESSIONAL ENGINEER 03/04/2020

WESSLER ENGINEERING
More than a Project™

WASTEWATER SYSTEM EXPANSION

CITY OF FRANKFORT, INDIANA
CONTRACT A - WASTEWATER TREATMENT PLANT

EXISTING PRIMARY SLUDGE PUMP ROOM ONE-LINE DIAGRAM

SHEET NO. **17E4**

PAGE NO. 206

Drawing: J:\Frankfort\Projects\193216 Frankfort WWTP Exp\CAD 04-001\DWG\Sheets\Area 17 - Elec\17e elect one-line diagram #1.dwg | Layout: 17E4 | Plotted: 03/04/20 @ 08:39:49 | LastSavedBy: RyanM

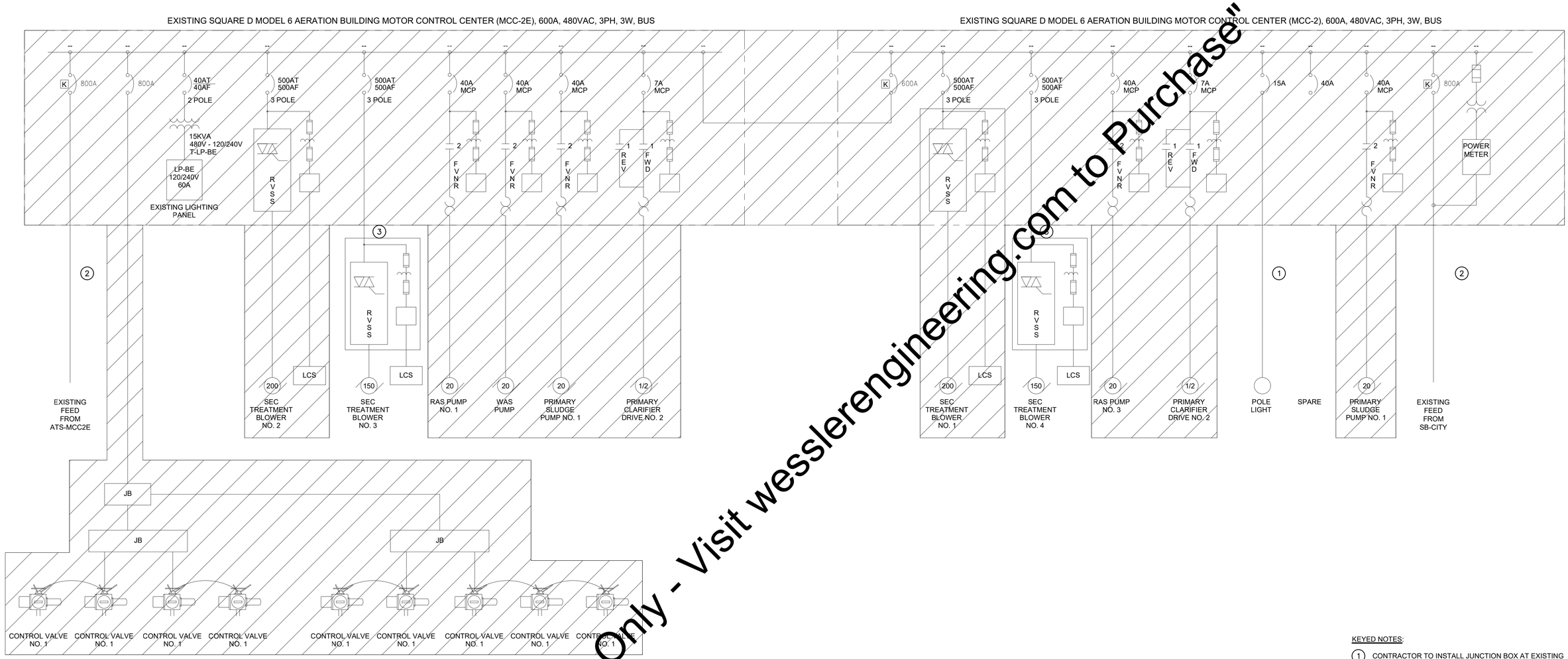

KEYED NOTES:

1. CONTRACTOR TO INSTALL JUNCTION BOX AT EXISTING CONDUIT AND WIRE WITHIN AERATION BUILDING. PROVIDE NEW WIRE AND CONDUIT INSIDE AND REUSE CONDUIT AND WIRE OUTSIDE.
2. CONTRACTOR TO USE EXISTING CONDUIT TO INSTALL NEW WIRE.
3. CONDUIT AND WIRE TO REMAIN FROM EXISTING STARTER TO BLOWER.

"For Viewing Purposes Only - Visit wesslerengineering.com to Purchase"

SCALE VERIFICATION	DRAWN BY	EAS
BAR IS ONE INCH LONG ON ORIGINAL DRAWING	CHECKED BY	DRF
	APPROVED BY	WCM
	ISSUE DATE	MARCH 2020
	PROJECT NUMBER	193216-04-001

NO.	DATE	INITIALS	REVISION DESCRIPTIONS

WAYNE C. MOORE REGISTERED No. 10707476 STATE OF INDIANA PROFESSIONAL ENGINEER 03/04/2020

WESSLER ENGINEERING
More than a Project™

WASTEWATER SYSTEM EXPANSION

CITY OF FRANKFORT, INDIANA
CONTRACT A - WASTEWATER TREATMENT PLANT

AERATION BUILDING MCC-2 AND MCC-2E ONE-LINE DEMO

SHEET NO.
17E5

PAGE NO.
207

Drawing: J:\Frankfort\Projects\193216 Frankfort WWTP Exp\CAD 04-001\DWG\Sheets\Area 17 - Elec\17e elect one-line diagram #1.dwg | Layout: 17E5 | Plotted: 03/04/20 @ 08:40:44 | LastSavedBy: RyanM

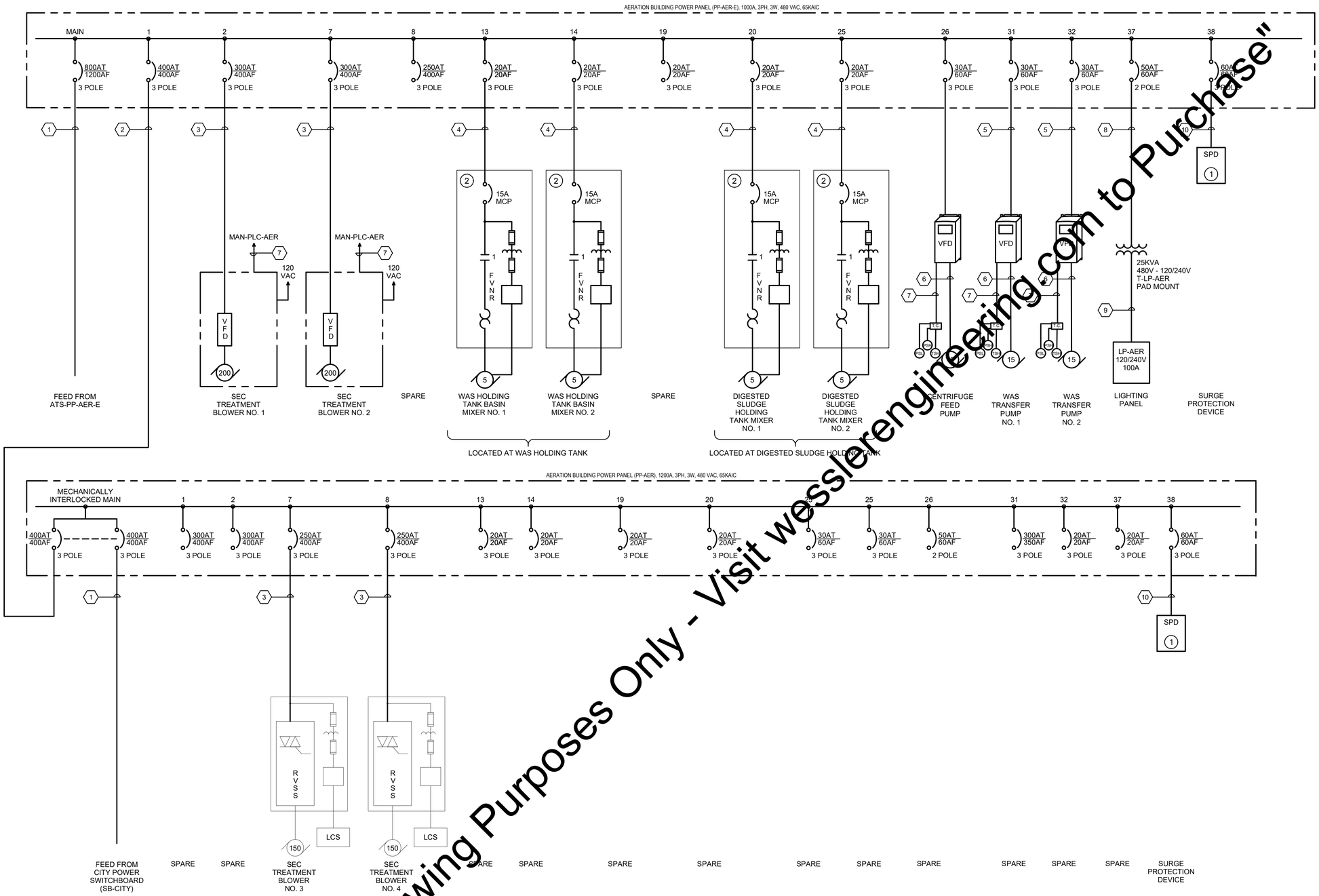

KEYED NOTES:

1. PROVIDE A SURGE PROTECTION DEVICE AS A CURRENT TECHNOLOGIES CG-50-480-3DG OR EMERSON EQUIVALENT.
2. COMBINATION MOTOR STARTER, NEMA SIZE 1, NEMA 4X, SST ENCLOSURE, OVERSIZE ENCLOSURE TO INCLUDE MIXER PROTECTION RELAY.

CONDUIT AND WIRE SCHEDULE:

1. SEE OVERALL ONE-LINE DIAGRAM
2. 2 - (3"C, 3#4/0, #3G)
3. 3"C, 3#350, #4G
4. 1"C, 3#10, #10G
5. 2"C, 3#8, #10G
6. 2"C, 3#8, #8G
7. SEE CONTROL ONE-LINES
8. 1"C, 2#6, #10G
9. 2"C, 2#2, #2N, #8G
10. 1"C, MANUFACTURER'S CABLE

"For Viewing Purposes Only - Visit wesslerengineering.com to Purchase"

SCALE VERIFICATION	DRAWN BY	EAS
BAR IS ONE INCH LONG ON ORIGINAL DRAWING	CHECKED BY	DRI
	APPROVED BY	WCM
	ISSUE DATE	MARCH 2020
	PROJECT NUMBER	193216-04-001

NO.	DATE	INITIALS	REVISION DESCRIPTIONS

WAYNE C. MOORE REGISTERED No. 10707476 STATE OF INDIANA PROFESSIONAL ENGINEER 03/04/2020

WESSLER ENGINEERING
More than a Project™

WASTEWATER SYSTEM EXPANSION

CITY OF FRANKFORT, INDIANA
CONTRACT A - WASTEWATER TREATMENT PLANT

AERATION BUILDING PP-AER AND PP-AER-E ONE-LINE DIAGRAM

SHEET NO. **17E6**

PAGE NO. 208

Drawing: J:\Frankfort\Projects\193216 Frankfort WWTP Exp\CAD 04-001\DWG\Sheets\Area 17 - Elec\17e elect one-line diagram #1.dwg | Layout: 17E6 | Plotted: 03/04/20 @ 08:41:14 | LastSavedBy: RyanM

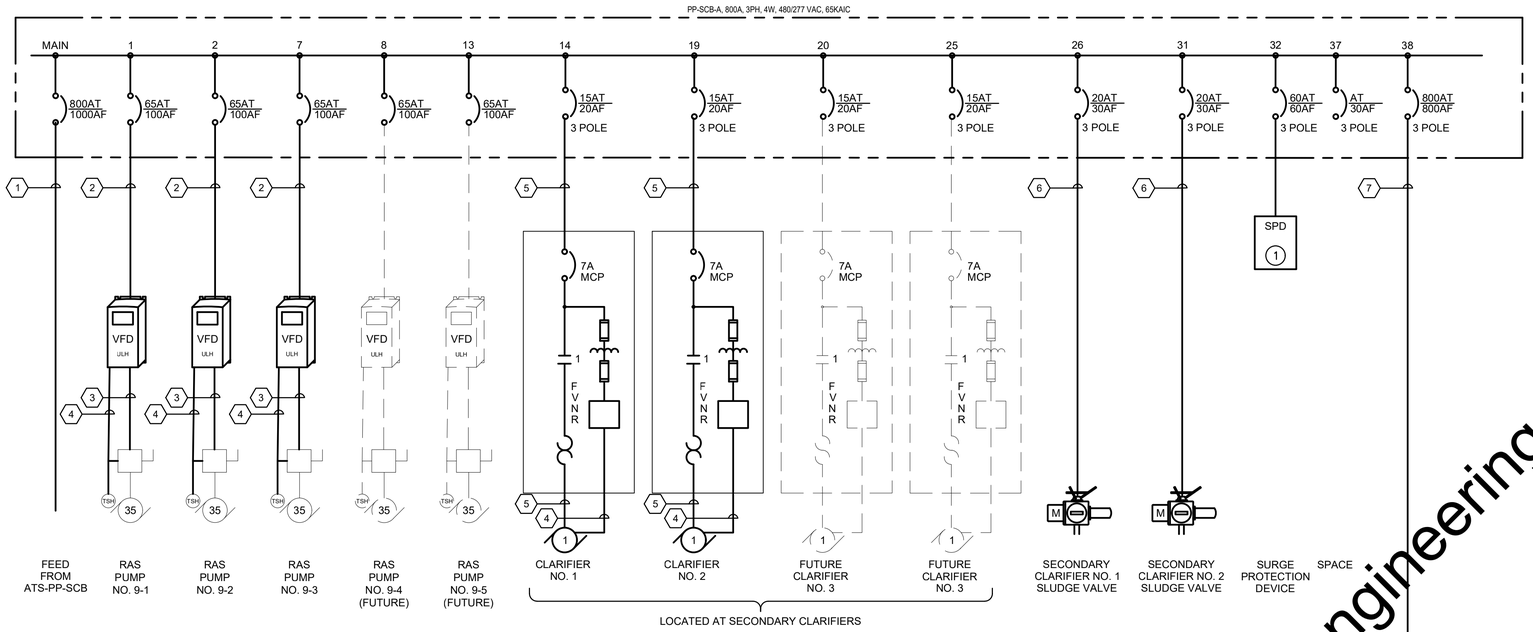

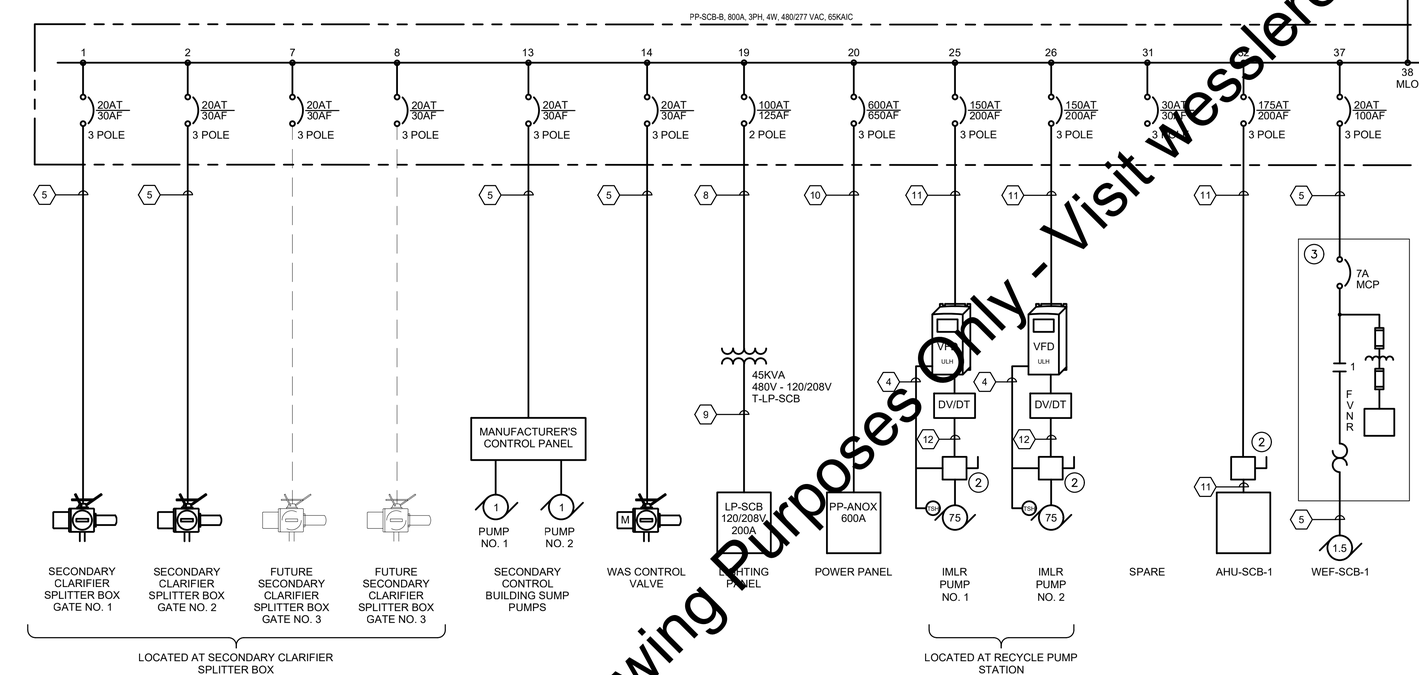

KEYED NOTES:

1. PROVIDE A SURGE PROTECTION DEVICE AS A CURRENT TECHNOLOGIES CG-50-480-3DG OR EMERSON EQUIVALENT.
2. 200A, 480V, 3-POLE, NEMA 4X, SST, NFSS
3. COMBINATION MOTOR STARTER , NEMA SIZE 1, NEMA 4X, SST ENCLOSURE

CONDUIT AND WIRE SCHEDULE:

1. SEE OVERALL ONE-LINE DIAGRAM
2. 2"C, 3#4, #8G
3. 2"C, 3#4, #4G
4. SEE CONTROL ONE-LINE DIAGRAM
5. 1"C, 3#10, #10G
6. 1"C, 3#10, #10G
7. 2 - (4"C, 3#600, #600N, #1/0G)
8. 2"C, 2#2, #8G
9. 3"C, 2#4/0. #4/0N, #2G
10. 2 - (3#350, #1G)
11. 3"C, 3#2/0, #6G
12. 3"C, 3#2/0, #2/0G

"For Viewing Purposes Only - Visit wesslerengineering.com to Purchase"

SCALE VERIFICATION	DRAWN BY	EAS
BAR IS ONE INCH LONG ON ORIGINAL DRAWING	CHECKED BY	DRI
	APPROVED BY	WCM
	ISSUE DATE	MARCH 2020
	PROJECT NUMBER	193216-04-001

NO.	DATE	INITIALS	REVISION DESCRIPTIONS

WAYNE C. MOORE REGISTERED No. 10707476 STATE OF INDIANA PROFESSIONAL ENGINEER 03/04/2020

WESSLER ENGINEERING
More than a Project™

WASTEWATER SYSTEM EXPANSION

CITY OF FRANKFORT, INDIANA
CONTRACT A - WASTEWATER TREATMENT PLANT

SECONDARY CONTROL BUILDING ONE-LINE DIAGRAM

SHEET NO. **17E7**

PAGE NO. 209

Drawing: J:\Frankfort\Projects\193216 Frankfort WWTP Exp\CAD 04-001\DWG\Sheets\Area 17 - Elec\17e elect one-line diagram #1.dwg | Layout: 17E7 | Plotted: 03/04/20 @ 08:41:48 | LastSavedBy: RyanM

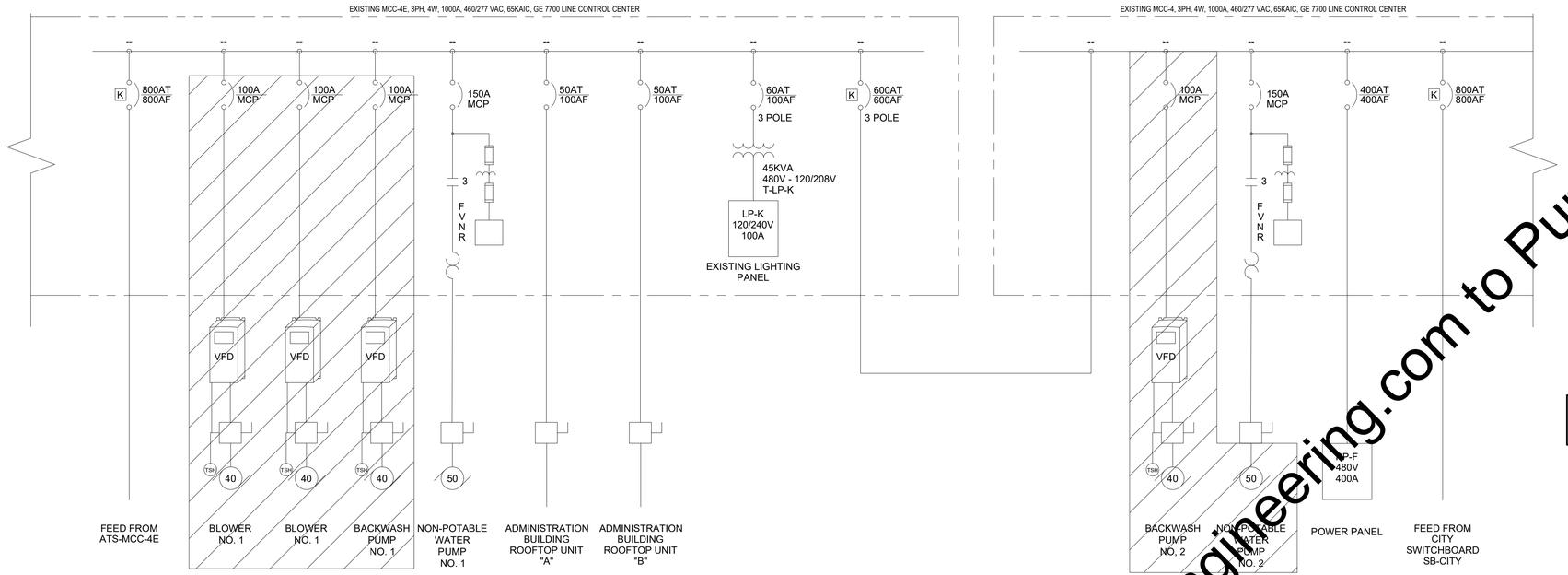

EXISTING MCC-4 AND MCC-4E DEMOLITION ONE-LINE DIAGRAM

SCALE: NONE

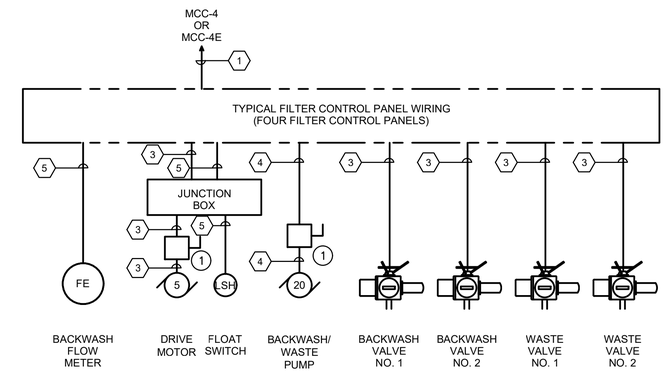

TYPICAL FILTER CONTROL PANEL POWER ONE-LINE DIAGRAM

SCALE: NONE

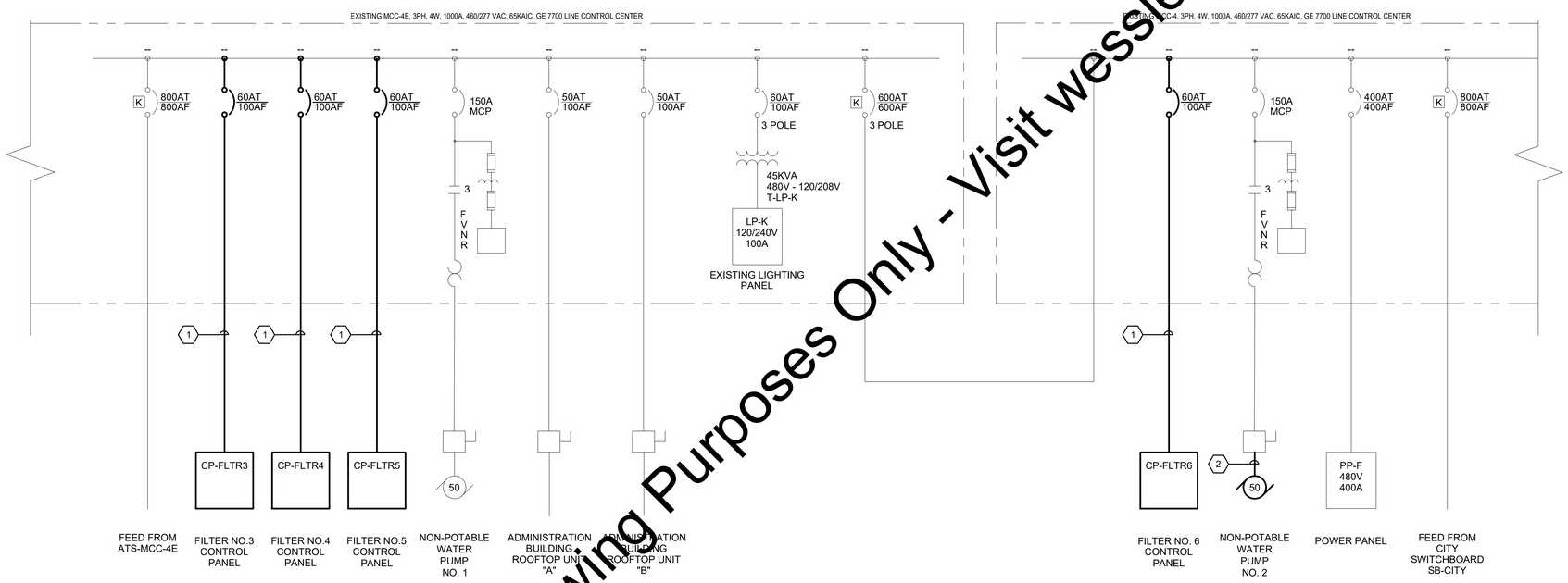

EXISTING MCC-4 AND MCC-4E MODIFICATION ONE-LINE DIAGRAM

SCALE: NONE

KEYED NOTES:

1. 60A, 480V, 3-POLE, NEMA 4X, SST, NFSS

CONDUIT AND WIRE SCHEDULE:

1. 2"C, 3#6, #10G
2. 2"C, 3#2, #6G
3. 3/4"C, 3#12, #12G
4. 1"C, 3#8, #10G
5. SEE CONTROL ONE-LINES

"For Viewing Purposes Only - Visit wesslerengineering.com to Purchase"

SCALE VERIFICATION	DRAWN BY	EAS
BAR IS ONE INCH LONG ON ORIGINAL DRAWING	CHECKED BY	PRT
	APPROVED BY	WCM
	ISSUE DATE	MARCH 2020
	PROJECT NUMBER	193216-04-001

NO.	DATE	INITIALS	REVISION DESCRIPTIONS

WAYNE C. MOORE REGISTERED No. 10707476 STATE OF INDIANA PROFESSIONAL ENGINEER 03/04/2020

WESSLER ENGINEERING
More than a Project™

WASTEWATER SYSTEM EXPANSION

CITY OF FRANKFORT, INDIANA
CONTRACT A - WASTEWATER TREATMENT PLANT

FILTER BUILDING MCC-4 AND MCC-4E ONE-LINE DIAGRAM

SHEET NO. **17E8**

PAGE NO. 210

Drawing: J:\Frankfort\Projects\193216 Frankfort WWTP Exp\CAD 04-001\DWG\Sheets\Area 17 - Elec\17e elect one-line diagram #1.dwg | Layout: 17E8 | Plotted: 03/04/20 @ 08:42:06 | LastSavedBy: RyanM

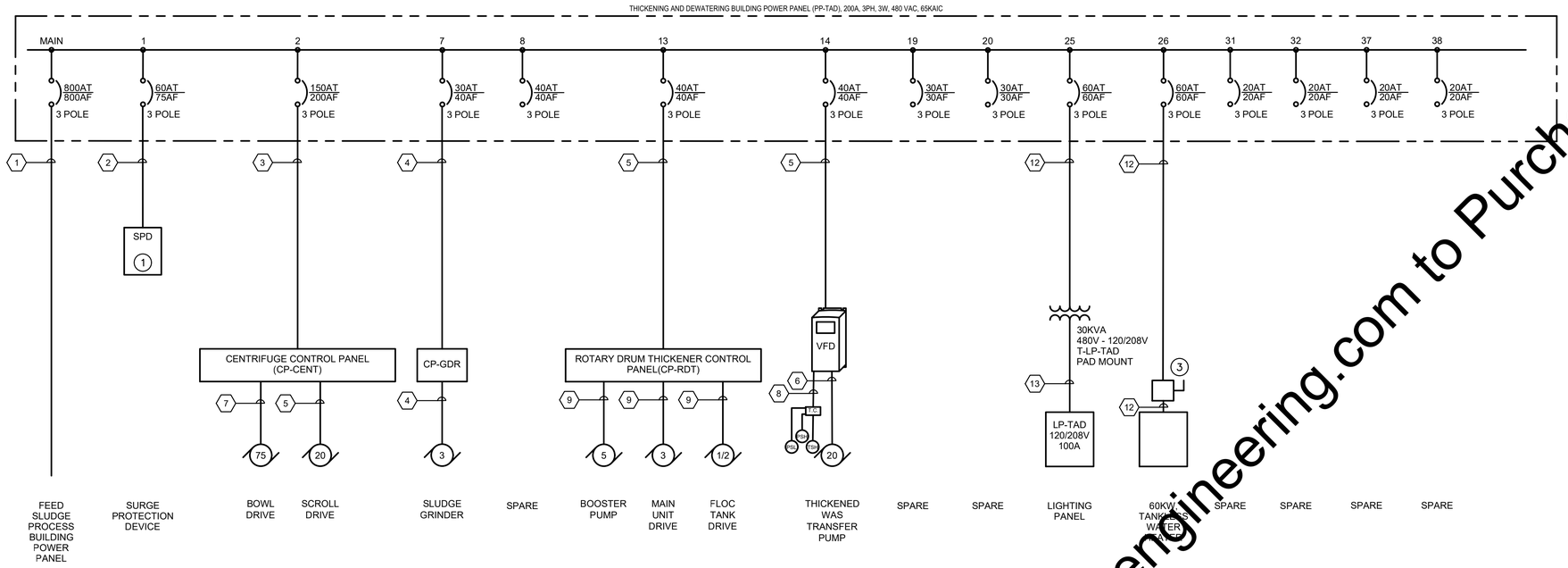

KEYED NOTES:

1. PROVIDE A SURGE PROTECTION DEVICE AS A CURRENT TECHNOLOGIES CG-50-480-3DG OR EMERSON EQUIVALENT.
2. 200A, 480V, 3-POLE, NEMA 4X, SST, NFSS
3. 100A, 480V, 3-POLE, NEMA 4X, SST, NFSS

CONDUIT AND WIRE SCHEDULE:

1. SEE OVERALL ONE-LINE DIAGRAM
2. 1"C, MANUFACTURER'S CABLE
3. 3"C, 3#2/0, #6G
4. 1"C, 3#10, #10G
5. 1"C, 3#8, #10G
6. 1"C, 3#8, #8G
7. 2"C, 3#1/0, #6G
8. SEE CONTROL ONE-LINE DIAGRAMS
9. 3/4"C, 3#12, #12G
10. 4"C, 3#600, #3G
11. 3"C, 3#4/0, #6G
12. 1"C, 3#6, #10G
13. 2"C, 3#2, #2N, #8G

"For Viewing Purposes Only - Visit wesslerengineering.com to Purchase"

SCALE VERIFICATION	DRAWN BY	EAS
BAR IS ONE INCH LONG ON ORIGINAL DRAWING	CHECKED BY	DRT
	APPROVED BY	WCM
	ISSUE DATE	MARCH 2020
	PROJECT NUMBER	193216-04-001

NO.	DATE	INITIALS	REVISION DESCRIPTIONS

WAYNE C. MOORE REGISTERED No. 10707476 STATE OF INDIANA PROFESSIONAL ENGINEER 03/04/2020

WESSLER ENGINEERING
More than a Project™

WASTEWATER SYSTEM EXPANSION

CITY OF FRANKFORT, INDIANA
CONTRACT A - WASTEWATER TREATMENT PLANT

TAD BUILDING ONE-LINE DIAGRAM

SHEET NO. **17E9**

PAGE NO. 211

Drawing: J:\FrankfortProjects\193216 Frankfort WWTP Exp\CAD 04-001DWG\Sheets\Area 17 - Elec\17e elect one-line diagram #1.dwg | Layout: 17E9 | Plotted: 03/04/20 @ 08:42:36 | LastSavedBy: RyanM

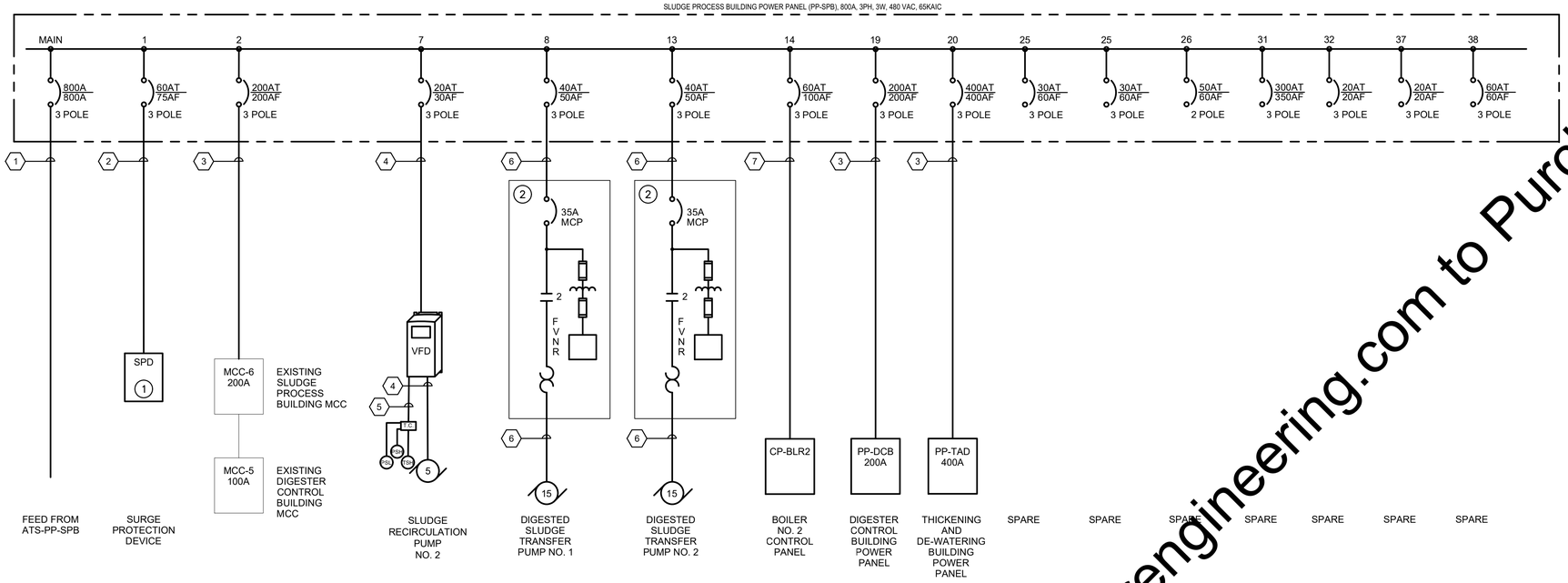

KEYED NOTES:

1. PROVIDE A SURGE PROTECTION DEVICE AS A CURRENT TECHNOLOGIES CG-50-480-3DG OR EMERSON EQUIVALENT.
2. COMBINATION MOTOR STARTER, NEMA SIZE 1, NEMA 12

CONDUIT AND WIRE SCHEDULE:

1. SEE PP-TAD ONE-LINE DIAGRAM
2. 1"C, MANUFACTURER'S CABLE
3. 2"C, 3#4/0, #6G
4. 1"C, 3#12, #12G
5. SEE CONTROL ONE-LINE DIAGRAMS
6. 2"C, 3#8, #10G
7. 2"C, 3#6, #8G

"For Viewing Purposes Only - Visit wesslerengineering.com to Purchase"

SCALE VERIFICATION	DRAWN BY	EAS
BAR IS ONE INCH LONG ON ORIGINAL DRAWING	CHECKED BY	DRT
	APPROVED BY	WCM
	ISSUE DATE	MARCH 2020
	PROJECT NUMBER	193216-04-001

NO.	DATE	INITIALS	REVISION DESCRIPTIONS

WAYNE C. MOORE REGISTERED No. 10707476 STATE OF INDIANA PROFESSIONAL ENGINEER 03/04/2020

WESSLER ENGINEERING
More than a Project™

WASTEWATER SYSTEM EXPANSION

CITY OF FRANKFORT, INDIANA
CONTRACT A - WASTEWATER TREATMENT PLANT

SLUDGE PROCESS ONE-LINE DIAGRAM

SHEET NO. **17E10**

PAGE NO. 212

Drawing: J:\FrankfortProjects\193216 Frankfort WWTP Exp\CAD 04-001DWG\Sheets\Area 17 - Elec\17e elect one-line diagram #1.dwg | Layout: 17E10 | Plotted: 03/04/20 @ 08:43:05 | LastSavedBy: RyanM

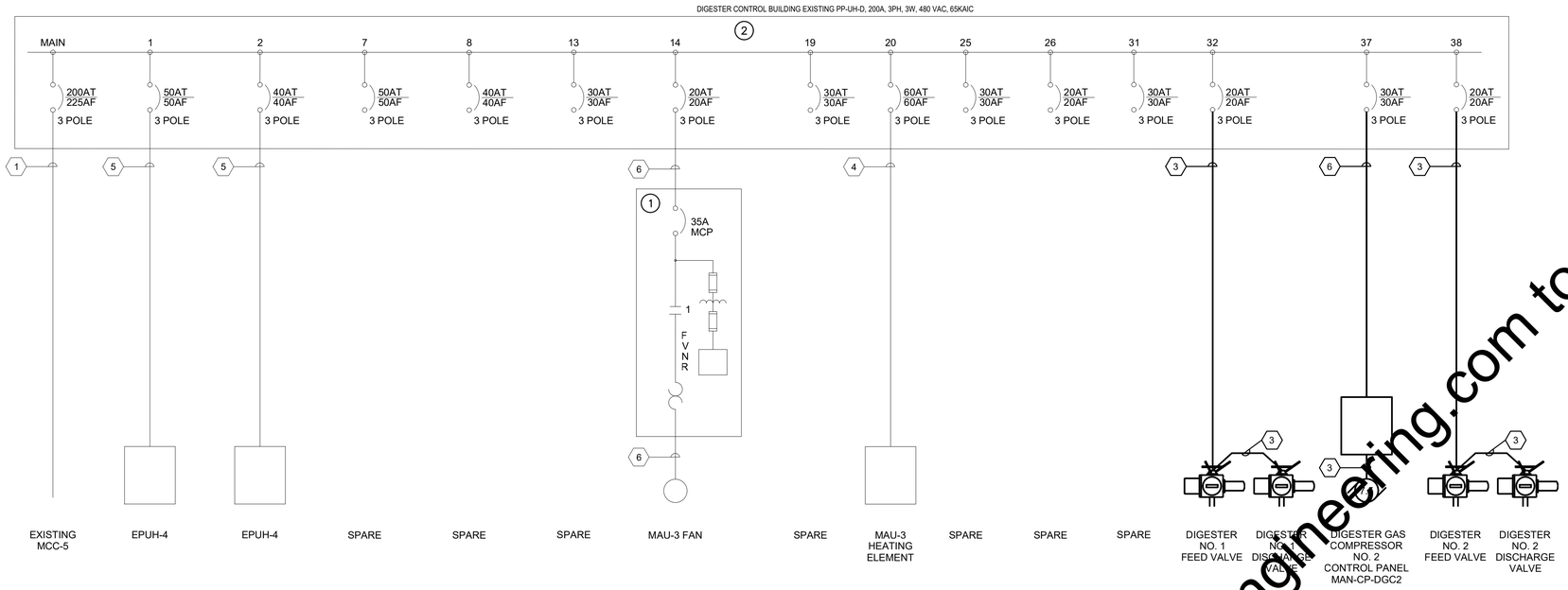

KEYED NOTES:

1. COMBINATION MOTOR STARTER, NEMA SIZE 1, NEMA 12 ENCLOSURE
2. EXISTING PANEL AND CIRCUIT BREAKERS

CONDUIT AND WIRE SCHEDULE:

1. EXISTING CONDUIT AND WIRE
2. 1"C, MANUFACTURER'S CABLE
3. 3/4"C, 3#12, #12G
4. 2"C, 3#6, #8G
5. 1"C, 3#8, #10G
6. 1"C, 3#10, #10G
7. 1"C, 3#8, #10G

"For Viewing Purposes Only - Visit wesslerengineering.com to Purchase"

SCALE VERIFICATION	DRAWN BY	EAS
BAR IS ONE INCH LONG ON ORIGINAL DRAWING	CHECKED BY	DRT
	APPROVED BY	WCM
	ISSUE DATE	MARCH 2020
	PROJECT NUMBER	193216-04-001

NO.	DATE	INITIALS	REVISION DESCRIPTIONS

WAYNE C. MOORE REGISTERED No. 10707476 STATE OF INDIANA PROFESSIONAL ENGINEER 03/04/2020

WESSLER ENGINEERING
More than a Project™

WASTEWATER SYSTEM EXPANSION

CITY OF FRANKFORT, INDIANA
CONTRACT A - WASTEWATER TREATMENT PLANT

DIGESTER CONTROL BUILDING ONE-LINE DIAGRAM

SHEET NO. **17E11**

PAGE NO. 213

Drawing: J:\FrankfortProjects\193216 Frankfort WWTP Exp\CAD 04-001DWG\Sheets\Area 17 - Elec\17e elect one-line diagram #1.dwg | Layout: 17E11 | Plotted: 03/05/20 @ 09:30:58 | LastSavedBy: RyanM

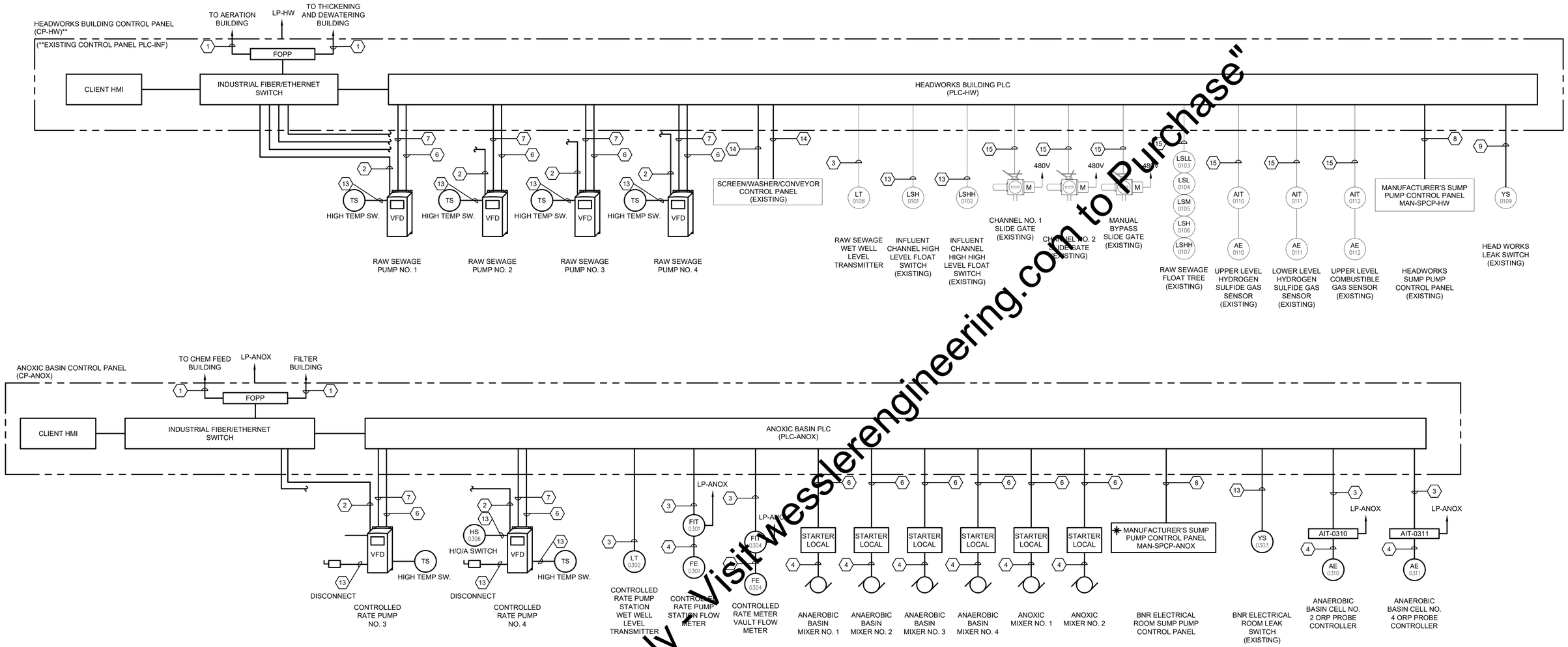

CONDUIT AND WIRE SCHEDULE:

1	2"C, FIBER	8	3/4"C, 6#14
2	3/4"C, CAT6 ETHERNET CABLE	9	3/4"C, 3#14
3	3/4"C, 2/C #16TPS	10	3/4"C, SPARE
4	3/4"C, MANUFACTURERS CABLE	11	3/4"C, 5 - 2/C#16TPS
5	1"C, 14#14	12	3/4"C, 3 - 2/C#16TPS
6	3/4"C, 8#14	13	3/4"C, 2#14
7	3/4"C, 2 - 2/C#16TPS	14	EXISTING CONDUIT, 12#14
		15	EXISTING CONDUIT, EXISTING WIRING

✱-PANEL PROVIDED BY MANUFACTURER

"For Viewing Purposes Only" Visit wesslerengineering.com to Purchase"

SCALE VERIFICATION	DRAWN BY	EAS
BAR IS ONE INCH LONG ON ORIGINAL DRAWING	CHECKED BY	DRT
	APPROVED BY	WCM
	ISSUE DATE	MARCH 2020
	PROJECT NUMBER	193216-04-001

NO.	DATE	INITIALS	REVISION DESCRIPTIONS

WAYNE C. MOORE REGISTERED No. 10707476 STATE OF INDIANA PROFESSIONAL ENGINEER 03/04/2020

WESSLER ENGINEERING
More than a Project™

WASTEWATER SYSTEM EXPANSION
CITY OF FRANKFORT, INDIANA
CONTRACT A - WASTEWATER TREATMENT PLANT

CONTROL ONE LINE DIAGRAMS

SHEET NO. **17E12**

PAGE NO. 214

Drawing: J:\Frankfort\Projects\193216 Frankfort WWTP Exp\CAD 04-001\DWG\Sheets\Area 17 - Elec\17E CONTROL ONE LINE DIAGRAMS.dwg | Layout: 17E12 | Plotted: 03/05/20 @ 10:52:34 | LastSavedBy: MarkoM

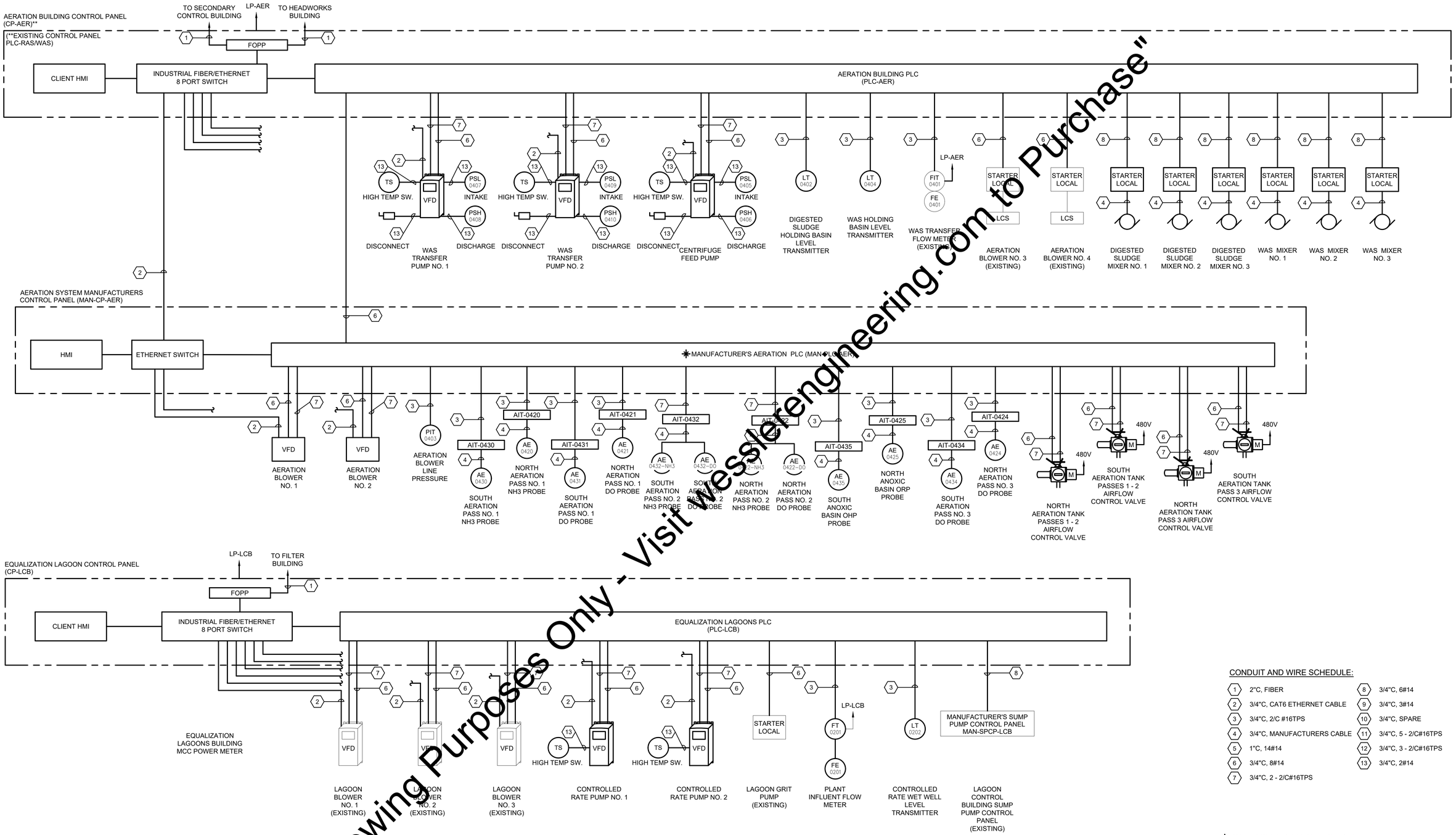

CONDUIT AND WIRE SCHEDULE:

1	2"C, FIBER	8	3/4"C, 6#14
2	3/4"C, CAT6 ETHERNET CABLE	9	3/4"C, 3#14
3	3/4"C, 2/C #16TPS	10	3/4"C, SPARE
4	3/4"C, MANUFACTURERS CABLE	11	3/4"C, 5 - 2/C#16TPS
5	1"C, 14#14	12	3/4"C, 3 - 2/C#16TPS
6	3/4"C, 8#14	13	3/4"C, 2#14
7	3/4"C, 2 - 2/C#16TPS		

*:PANEL PROVIDED BY MANUFACTURER

"For Viewing Purposes Only - Visit wesslerengineering.com to Purchase"

SCALE VERIFICATION	DRAWN BY	EAS
BAR IS ONE INCH LONG ON ORIGINAL DRAWING	CHECKED BY	DRT
	APPROVED BY	WCM
	ISSUE DATE	MARCH 2020
	PROJECT NUMBER	193216-04-001

NO.	DATE	INITIALS	REVISION DESCRIPTIONS

WAYNE C. MOORE REGISTERED No. 10707476 STATE OF INDIANA PROFESSIONAL ENGINEER 03/04/2020

WESSLER ENGINEERING
More than a Project™

WASTEWATER SYSTEM EXPANSION
CITY OF FRANKFORT, INDIANA
CONTRACT A - WASTEWATER TREATMENT PLANT

CONTROL ONE LINE DIAGRAMS

SHEET NO. **17E13**
PAGE NO. 215

Drawing: J:\Frankfort\Projects\193216 Frankfort WWTP Exp\CAD 04-001\DWG\Sheets\Area 17 - Elec\17E CONTROL ONE LINE DIAGRAMS.dwg | Layout: 17E13 | Plotted: 03/05/20 @ 10:52:35 | LastSavedBy: MarkoM

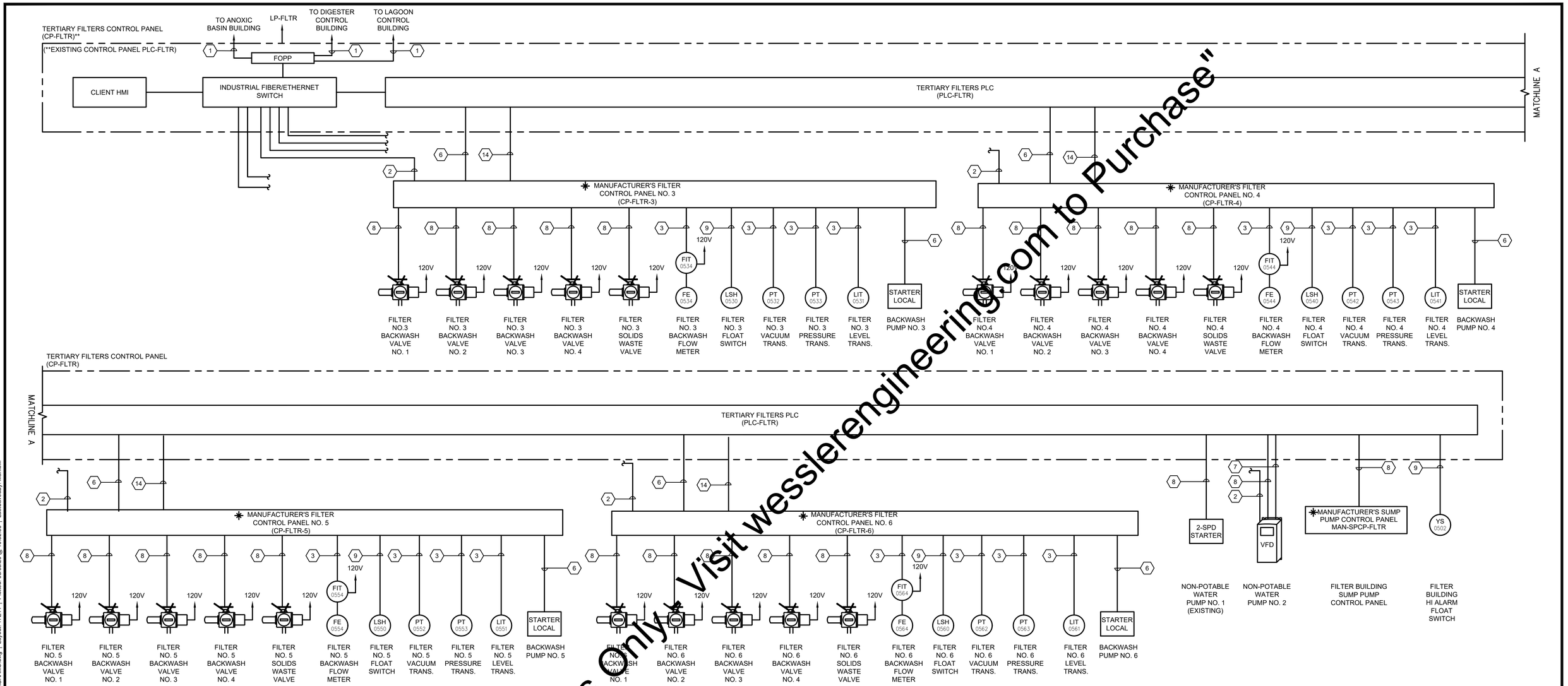

CONDUIT AND WIRE SCHEDULE:

1	2"C, FIBER	8	3/4"C, 6#14
2	3/4"C, CAT6 ETHERNET CABLE	9	3/4"C, 3#14
3	3/4"C, 2/C #16TPS	10	3/4"C, SPARE
4	3/4"C, MANUFACTURERS CABLE	11	3/4"C, 5 - 2/C#16TPS
5	1"C, 14#14	12	3/4"C, 3 - 2/C#16TPS
6	3/4"C, 8#14	13	3/4"C, 2#14
7	3/4"C, 2 - 2/C#16TPS	14	3/4"C, 4 - 2/C#16TPS

✱-PANEL PROVIDED BY MANUFACTURER

"For Viewing Purposes Only" Visit wesslerengineering.com to Purchase"

SCALE VERIFICATION	DRAWN BY	EAS
BAR IS ONE INCH LONG ON ORIGINAL DRAWING	CHECKED BY	DRT
	APPROVED BY	WCM
	ISSUE DATE	MARCH 2020
	PROJECT NUMBER	193216-04-001

NO.	DATE	INITIALS	REVISION DESCRIPTIONS

WAYNE C. MOORE REGISTERED No. 10707476 STATE OF INDIANA PROFESSIONAL ENGINEER 03/04/2020

WESSLER ENGINEERING
More than a Project™

WASTEWATER SYSTEM EXPANSION
CITY OF FRANKFORT, INDIANA
CONTRACT A - WASTEWATER TREATMENT PLANT

CONTROL ONE LINE DIAGRAMS

SHEET NO. **17E14**

PAGE NO. 216

Drawing: J:\Frankfort\Projects\193216 Frankfort WWTP Exp\CAD 04-001\DWG\Sheets\Area 17 - Elec\17E CONTROL ONE LINE DIAGRAMS.dwg | Layout: 17E14 | Plotted: 03/05/20 @ 10:52:36 | LastSavedBy: MarkoM

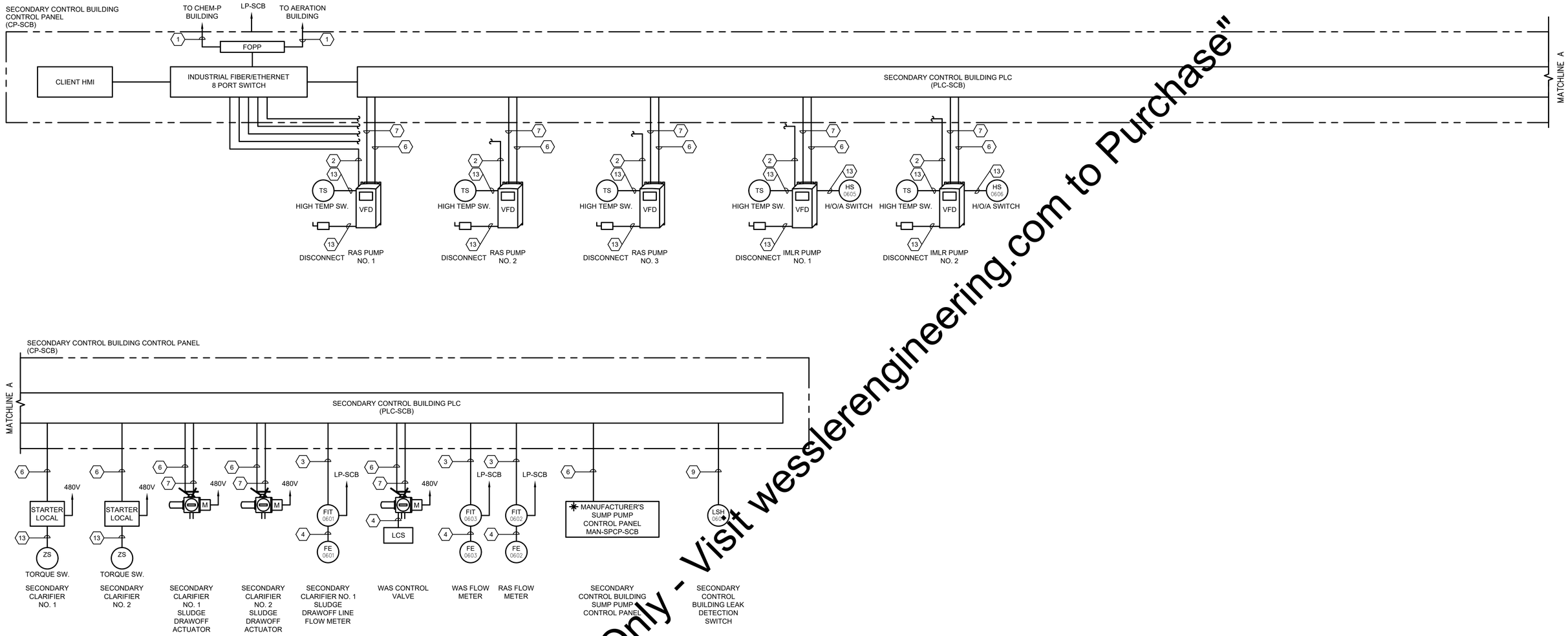

CONDUIT AND WIRE SCHEDULE:

1	2"C, FIBER	8	3/4"C, 6#14
2	3/4"C, CAT6 ETHERNET CABLE	9	3/4"C, 3#14
3	3/4"C, 2/C #16TPS	10	3/4"C, SPARE
4	3/4"C, MANUFACTURERS CABLE	11	3/4"C, 5 - 2/C#16TPS
5	1"C, 14#14	12	3/4"C, 3 - 2/C#16TPS
6	3/4"C, 8#14	13	3/4"C, 2#14
7	3/4"C, 2 - 2/C#16TPS		

✱ PANEL PROVIDED BY MANUFACTURER

"For Viewing Purposes Only - Visit wesslerengineering.com to Purchase"

SCALE VERIFICATION	DRAWN BY	EAS
BAR IS ONE INCH LONG ON ORIGINAL DRAWING	CHECKED BY	PRI
	APPROVED BY	WCM
	ISSUE DATE	MARCH 2020
	PROJECT NUMBER	193216-04-001

NO.	DATE	INITIALS	REVISION DESCRIPTIONS

WAYNE C. MOORE REGISTERED No. 10707476 STATE OF INDIANA PROFESSIONAL ENGINEER 03/04/2020

WESSLER ENGINEERING
More than a Project™

WASTEWATER SYSTEM EXPANSION

CITY OF FRANKFORT, INDIANA
CONTRACT A - WASTEWATER TREATMENT PLANT

CONTROL ONE LINE DIAGRAMS

SHEET NO.
17E15

PAGE NO.
217

Drawing: J:\Frankfort\Projects\193216 Frankfort WWTP Exp\CAD 04-001\DWG\Sheets\Area 17 - Elec\17E CONTROL ONE LINE DIAGRAMS.dwg | Layout: 17E15 | Plotted: 03/05/20 @ 10:52:36 | LastSavedBy: MarkoM

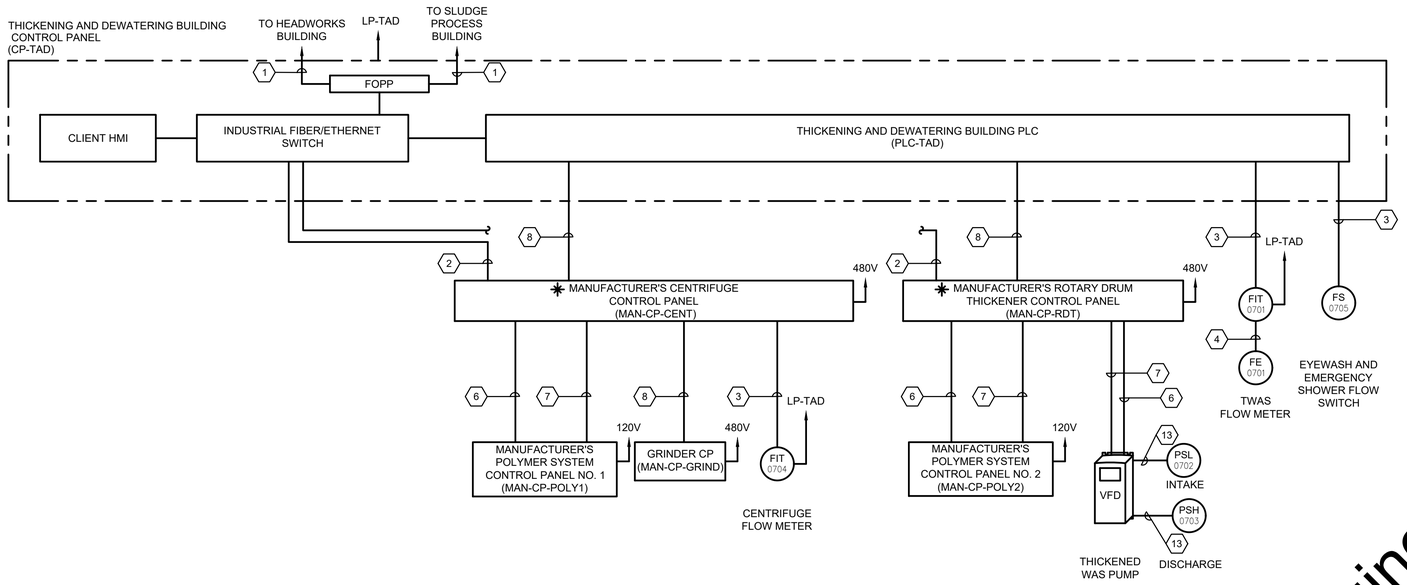

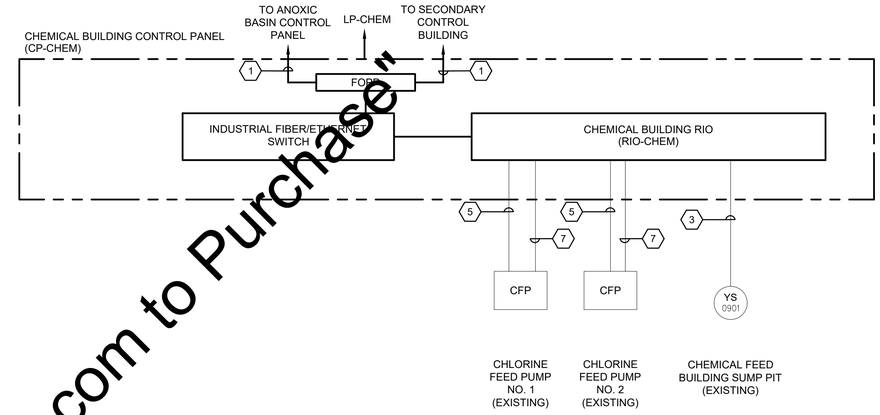

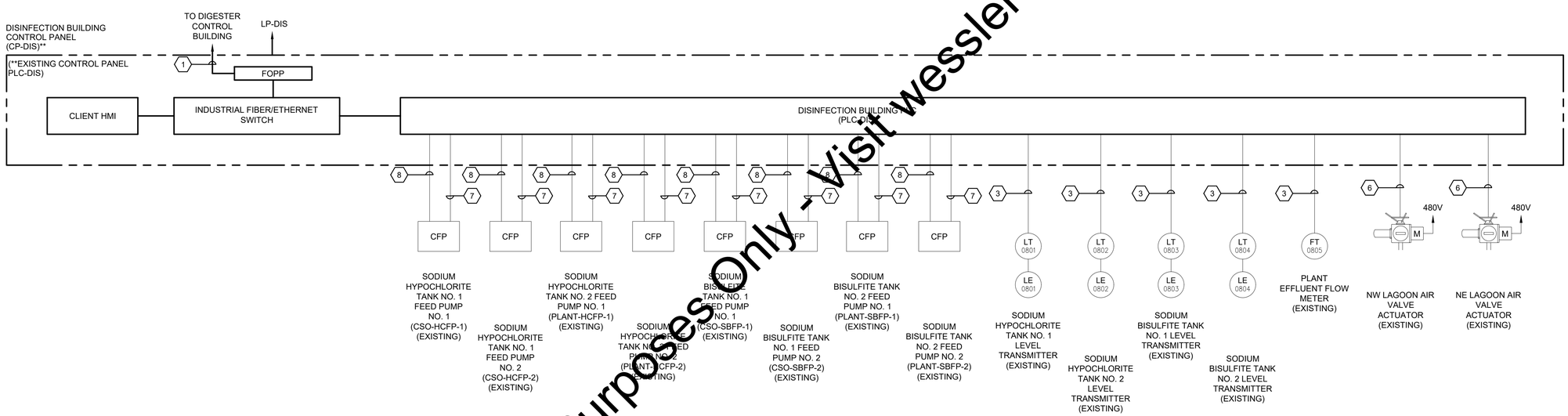

CONDUIT AND WIRE SCHEDULE:

1	2"C, FIBER	8	3/4"C, 6#14
2	3/4"C, CAT6 ETHERNET CABLE	9	3/4"C, 3#14
3	3/4"C, 2/C #16TPS	10	3/4"C, SPARE
4	3/4"C, MANUFACTURERS CABLE	11	3/4"C, 5 - 2/C#16TPS
5	1"C, 14#14	12	3/4"C, 3 - 2/C#16TPS
6	3/4"C, 8#14	13	3/4"C, 2#14
7	3/4"C, 2 - 2/C#16TPS		

✱-PANEL PROVIDED BY MANUFACTURER

"For Viewing Purposes Only - Visit wesslerengineering.com to Purchase"

SCALE VERIFICATION	DRAWN BY	EAS
BAR IS ONE INCH LONG ON ORIGINAL DRAWING	CHECKED BY	DRI
	APPROVED BY	WCM
	ISSUE DATE	MARCH 2020
	PROJECT NUMBER	193216-04-001

NO.	DATE	INITIALS	REVISION DESCRIPTIONS

WAYNE C. MOORE REGISTERED No. 10707476 STATE OF INDIANA PROFESSIONAL ENGINEER 03/04/2020

WESSLER ENGINEERING
More than a Project™

WASTEWATER SYSTEM EXPANSION
CITY OF FRANKFORT, INDIANA
CONTRACT A - WASTEWATER TREATMENT PLANT

CONTROL ONE LINE DIAGRAMS

SHEET NO. **17E16**

PAGE NO. 218

Drawing: J:\Frankfort\Projects\193216 Frankfort WWTP Exp\CAD 04-001\DWG\Sheets\Area 17 - Elec\17E CONTROL ONE LINE DIAGRAMS.dwg | Layout: 17E16 | Plotted: 03/05/20 @ 10:52:37 | LastSavedBy: MarkoM

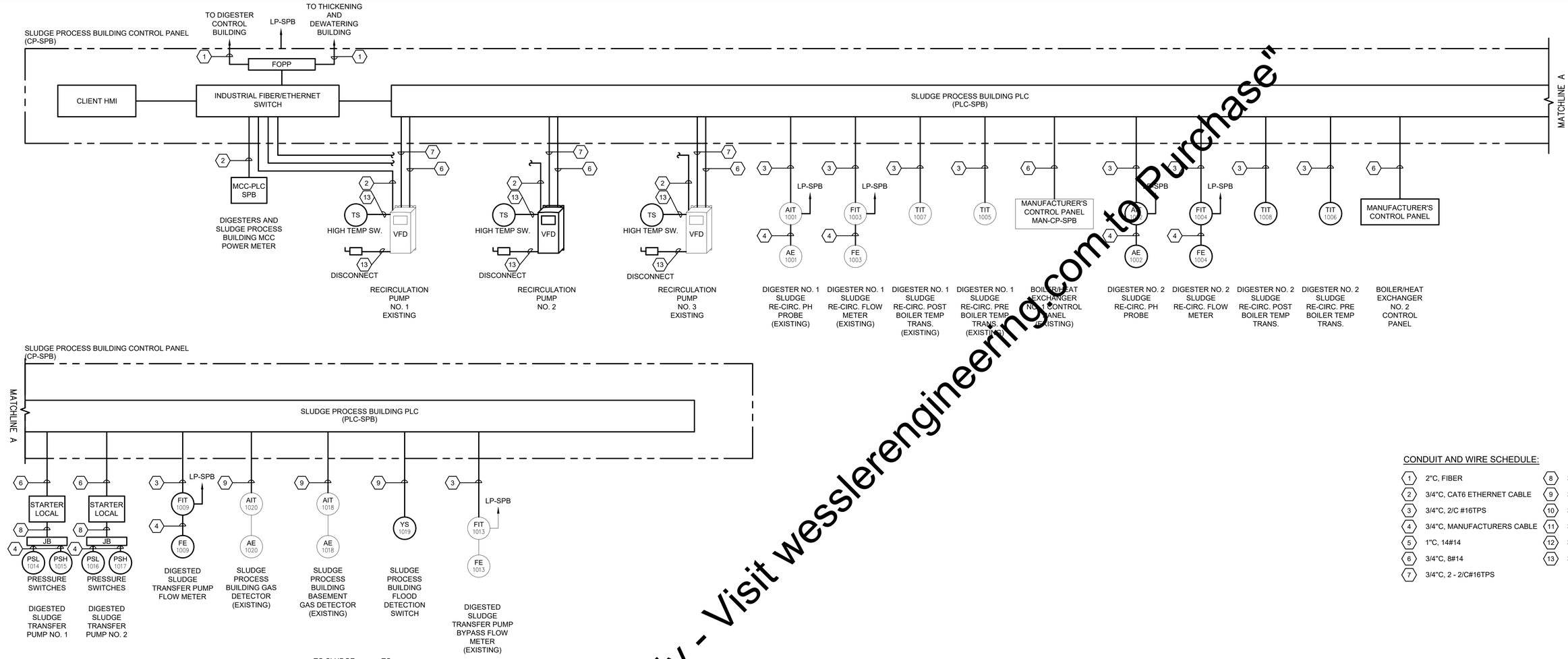

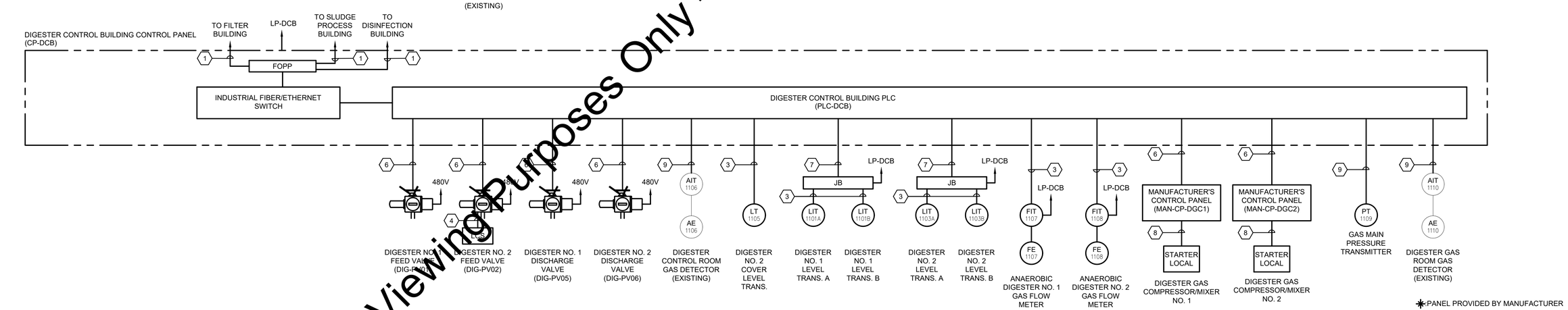

CONDUIT AND WIRE SCHEDULE:

1	2"C, FIBER	8	3/4"C, 6#14
2	3/4"C, CAT6 ETHERNET CABLE	9	3/4"C, 3#14
3	3/4"C, 2/C #16TPS	10	3/4"C, SPARE
4	3/4"C, MANUFACTURERS CABLE	11	3/4"C, 5 - 2/C#16TPS
5	1"C, 14#14	12	3/4"C, 3 - 2/C#16TPS
6	3/4"C, 8#14	13	3/4"C, 2#14
7	3/4"C, 2 - 2/C#16TPS		

"For Viewing Purposes Only - Visit wesslerengineering.com to Purchase"

SCALE VERIFICATION	DRAWN BY	EAS
BAR IS ONE INCH LONG ON ORIGINAL DRAWING	CHECKED BY	DRI
	APPROVED BY	WCM
	ISSUE DATE	MARCH 2020
	PROJECT NUMBER	193216-04-001

NO.	DATE	INITIALS	REVISION DESCRIPTIONS

WAYNE C. MOORE REGISTERED No. 10707476 STATE OF INDIANA PROFESSIONAL ENGINEER 03/04/2020

WESSLER ENGINEERING
More than a Project™

WASTEWATER SYSTEM EXPANSION

CITY OF FRANKFORT, INDIANA
CONTRACT A - WASTEWATER TREATMENT PLANT

CONTROL ONE LINE DIAGRAMS

SHEET NO. **17E17**

PAGE NO. 219

Drawing: J:\Frankfort\Projects\193216 Frankfort WWTP Exp\CAD 04-001\DWG\Sheets\Area 17 - Elec\17E CONTROL ONE LINE DIAGRAMS.dwg | Layout: 17E17 | Plotted: 03/05/20 @ 10:52:38 | LastSavedBy: MarkoM

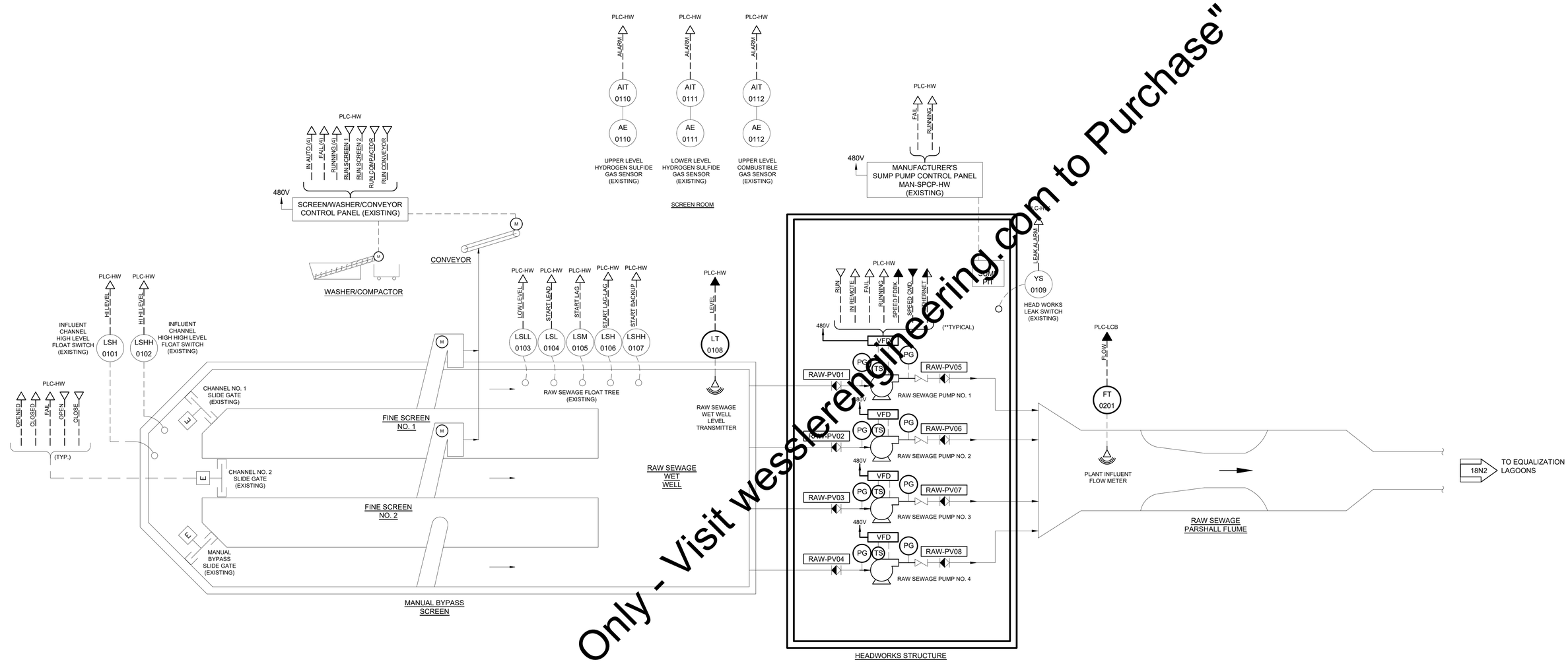

"For Viewing Purposes Only - Visit wesslerengineering.com to Purchase"

SCALE VERIFICATION	DRAWN BY	EAS
BAR IS ONE INCH LONG ON ORIGINAL DRAWING	CHECKED BY	DRI
	APPROVED BY	WCM
	ISSUE DATE	MARCH 2020
	PROJECT NUMBER	193216-04-001

NO.	DATE	INITIALS	REVISION DESCRIPTIONS

WAYNE C. MOORE REGISTERED No. 10707476 STATE OF INDIANA PROFESSIONAL ENGINEER 03/04/2020

WESSLER ENGINEERING
More than a Project™

WASTEWATER SYSTEM EXPANSION
CITY OF FRANKFORT, INDIANA
CONTRACT A - WASTEWATER TREATMENT PLANT

PIPING AND INSTRUMENTATION DRAWING
HEADWORKS

SHEET NO. **18N1**

PAGE NO. 220

Drawing: J:\Frankfort\Projects\193216 Frankfort WWTP Exp\CAD 04-001\DWG\Sheets\Area 18 - I and C\18N P&ID.dwg | Layout: 18N1 | Plotted: 03/05/20 @ 10:52:51 | LastSavedBy: BrianP

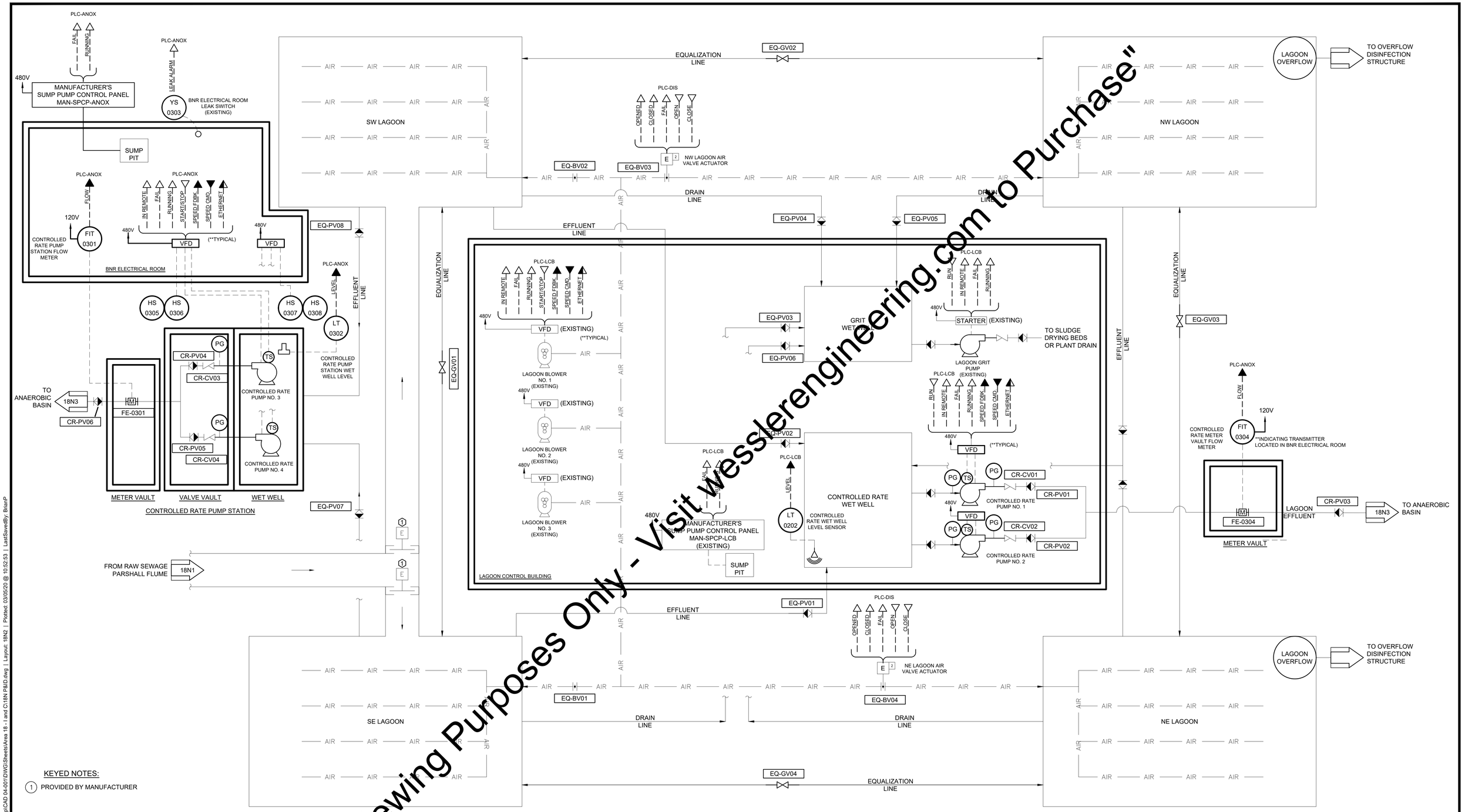

KEYED NOTES:

1. PROVIDED BY MANUFACTURER

"For Viewing Purposes Only - Visit wesslerengineering.com to Purchase"

SCALE VERIFICATION	DRAWN BY	EAS
BAR IS ONE INCH LONG ON ORIGINAL DRAWING	CHECKED BY	DRT
	APPROVED BY	WCM
	ISSUE DATE	MARCH 2020
	PROJECT NUMBER	193216-04-001

NO.	DATE	INITIALS	REVISION DESCRIPTIONS

WAYNE C. MOORE REGISTERED No. 10707476 STATE OF INDIANA PROFESSIONAL ENGINEER 03MAR2020

WESSLER ENGINEERING
More than a Project™

WASTEWATER SYSTEM EXPANSION

CITY OF FRANKFORT, INDIANA
CONTRACT A - WASTEWATER TREATMENT PLANT

PIPING AND INSTRUMENTATION DRAWING
EQUALIZATION LAGOONS

SHEET NO. 18N2

PAGE NO. 221

Drawing: J:\Frankfort\Projects\193216 Frankfort WWTP Exp\CAD 04-001\DWGS\Sheets\Area 18 - I and C\18N P&ID.dwg | Layout: 18N2 | Plotted: 03/05/20 @ 10:52:53 | LastSavedBy: BrianP

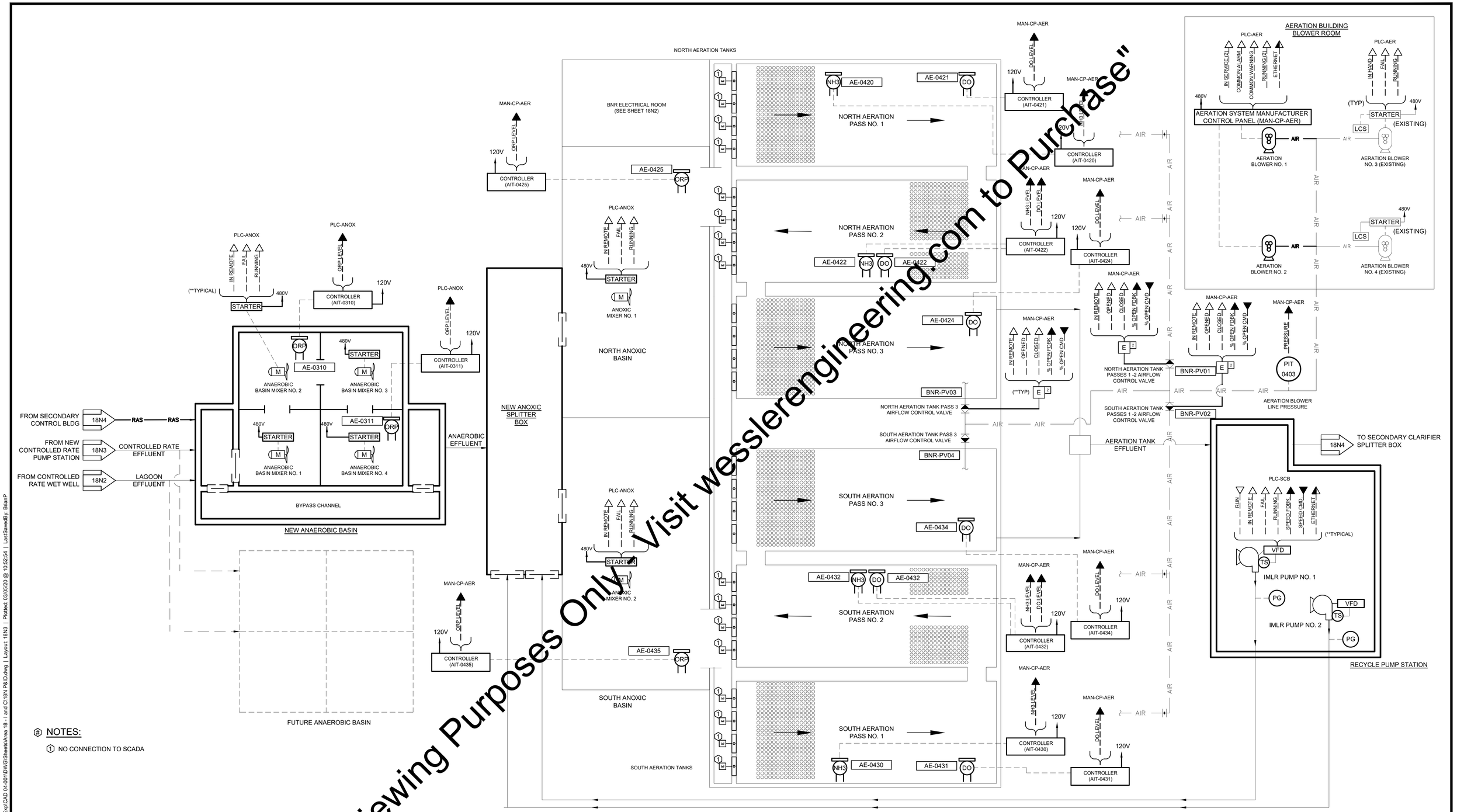

NOTES:

1. NO CONNECTION TO SCADA

"For Viewing Purposes Only - Visit wesslerengineering.com to Purchase"

SCALE VERIFICATION	DRAWN BY	EAS
BAR IS ONE INCH LONG ON ORIGINAL DRAWING	CHECKED BY	DRI
	APPROVED BY	WCM
	ISSUE DATE	MARCH 2020
	PROJECT NUMBER	193216-04-001

NO.	DATE	INITIALS	REVISION DESCRIPTIONS

WAYNE C. MOORE REGISTERED No. 10707476 STATE OF INDIANA PROFESSIONAL ENGINEER 03/04/2020

WESSLER ENGINEERING
More than a Project™

WASTEWATER SYSTEM EXPANSION

CITY OF FRANKFORT, INDIANA
CONTRACT A - WASTEWATER TREATMENT PLANT

PIPING AND INSTRUMENTATION DRAWING
AERATION

SHEET NO.
18N3

PAGE NO.
222

Drawing: J:\Frankfort\Projects\193216 Frankfort WWTP Exp\CAD 04-0001\DWG\Sheets\Area 18 - I and C\18N P&ID.dwg | Layout: 18N3 | Plotted: 03/05/20 @ 10:52:54 | LastSavedBy: BrianP

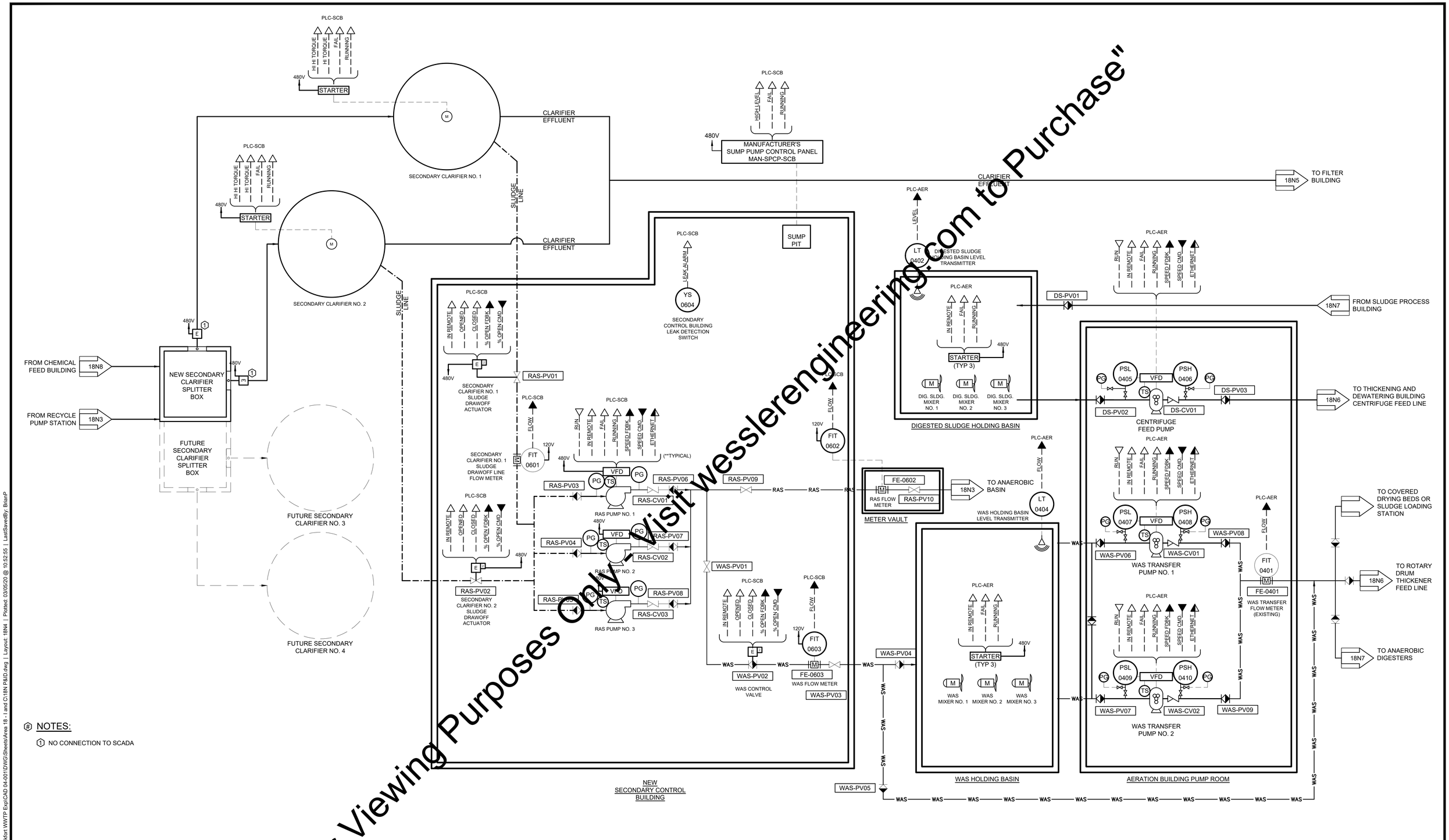

NOTES:

1. NO CONNECTION TO SCADA

"For Viewing Purposes Only" Visit wesslerengineering.com to Purchase"

SCALE VERIFICATION	DRAWN BY	EAS
BAR IS ONE INCH LONG ON ORIGINAL DRAWING	CHECKED BY	PRI
	APPROVED BY	WCM
	ISSUE DATE	MARCH 2020
	PROJECT NUMBER	193216-04-001

NO.	DATE	INITIALS	REVISION DESCRIPTIONS

WAYNE C. MOORE REGISTERED No. 10707476 STATE OF INDIANA PROFESSIONAL ENGINEER 03/04/2020

WESSLER ENGINEERING
More than a Project™

WASTEWATER SYSTEM EXPANSION

CITY OF FRANKFORT, INDIANA
CONTRACT A - WASTEWATER TREATMENT PLANT

PIPING AND INSTRUMENTATION DRAWING
SECONDARY CLARIFIERS AND WAS

SHEET NO.
18N4

PAGE NO.
223

Drawing: J:\Frankfort\Projects\193216 Frankfort WWTP Exp\CAD 04-001\DWG\Sheets\Area 18 - I and C\18N P&ID.dwg | Layout: 18N4 | Plotted: 03/05/20 @ 10:52:55 | LastSavedBy: BrianP

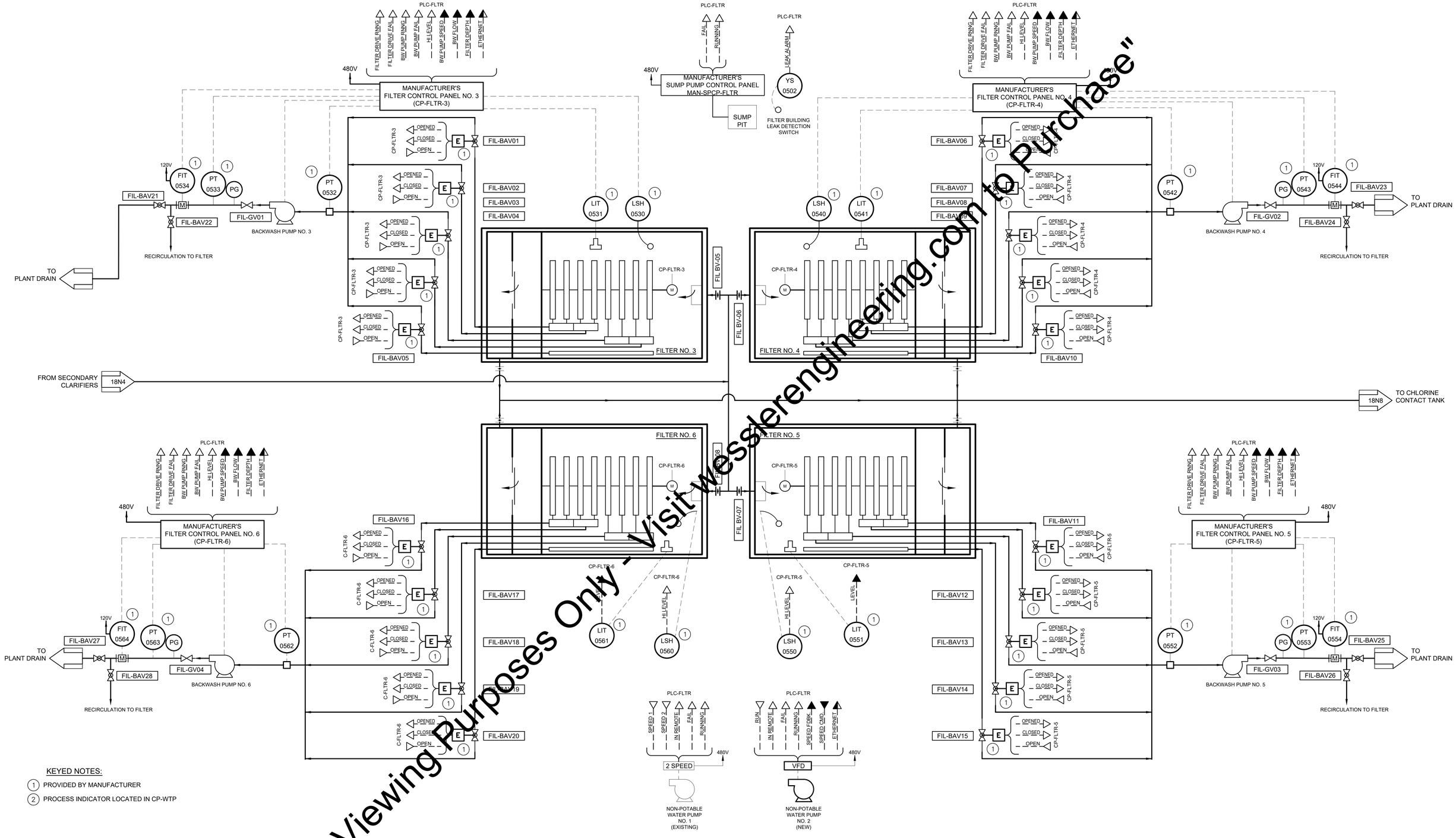

KEYED NOTES:

1. PROVIDED BY MANUFACTURER
2. PROCESS INDICATOR LOCATED IN CP-WTP

"For Viewing Purposes Only - Visit wesslerengineering.com to Purchase"

SCALE VERIFICATION	DRAWN BY	EAS
BAR IS ONE INCH LONG ON ORIGINAL DRAWING	CHECKED BY	DRT
	APPROVED BY	WCM
	ISSUE DATE	MARCH 2020
	PROJECT NUMBER	193216-04-001

NO.	DATE	INITIALS	REVISION DESCRIPTIONS

WAYNE C. MOORE REGISTERED No. 10707476 STATE OF INDIANA PROFESSIONAL ENGINEER 03/04/2020

WESSLER ENGINEERING
More than a Project™

WASTEWATER SYSTEM EXPANSION
CITY OF FRANKFORT, INDIANA
CONTRACT A - WASTEWATER TREATMENT PLANT

PIPING AND INSTRUMENTATION DRAWING
TERTIARY FILTERS

SHEET NO. **18N5**

PAGE NO. 224

Drawing: J:\Frankfort\Projects\193216 Frankfort WWTP Exp\CAD 04-001\DWG\Sheets\Area 18 - I and C\18N P&ID.dwg | Layout: 18N5 | Plotted: 03/05/20 @ 10:52:56 | LastSavedBy: BrianP

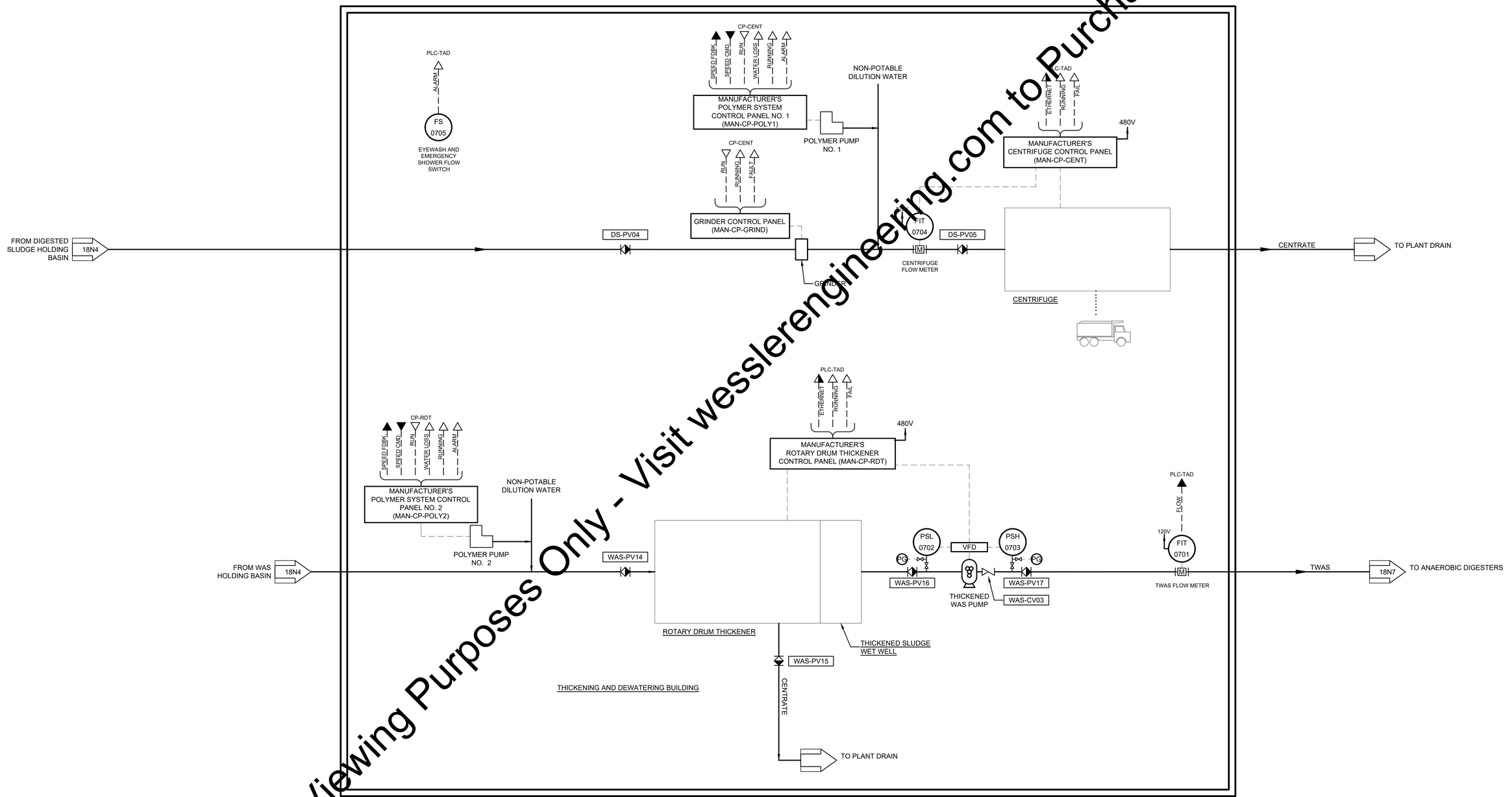

"For Viewing Purposes Only - Visit wesslerengineering.com to Purchase"

SCALE VERIFICATION	DRAWN BY	EAS
BAR IS ONE INCH LONG ON ORIGINAL DRAWING	CHECKED BY	DRF
	APPROVED BY	WCM
	ISSUE DATE	MARCH 2020
	PROJECT NUMBER	193216-04-001

NO.	DATE	INITIALS	REVISION DESCRIPTIONS

WAYNE C. MOORE REGISTERED No. 10707476 STATE OF INDIANA PROFESSIONAL ENGINEER 03/04/2020

WESSLER ENGINEERING
More than a Project™

WASTEWATER SYSTEM EXPANSION

CITY OF FRANKFORT, INDIANA
CONTRACT A - WASTEWATER TREATMENT PLANT

PIPING AND INSTRUMENTATION DRAWING
THICKENING AND DEWATERING

SHEET NO.
18N6

PAGE NO.
225

Drawing: J:\Frankfort\Projects\193216 Frankfort WWTP Exp\CAD 04-001\DWG\Sheets\Area 18 - I and C\18N P&ID.dwg | Layout: 18N6 | Plotted: 03/05/20 @ 10:52:57 | LastSavedBy: BrianP

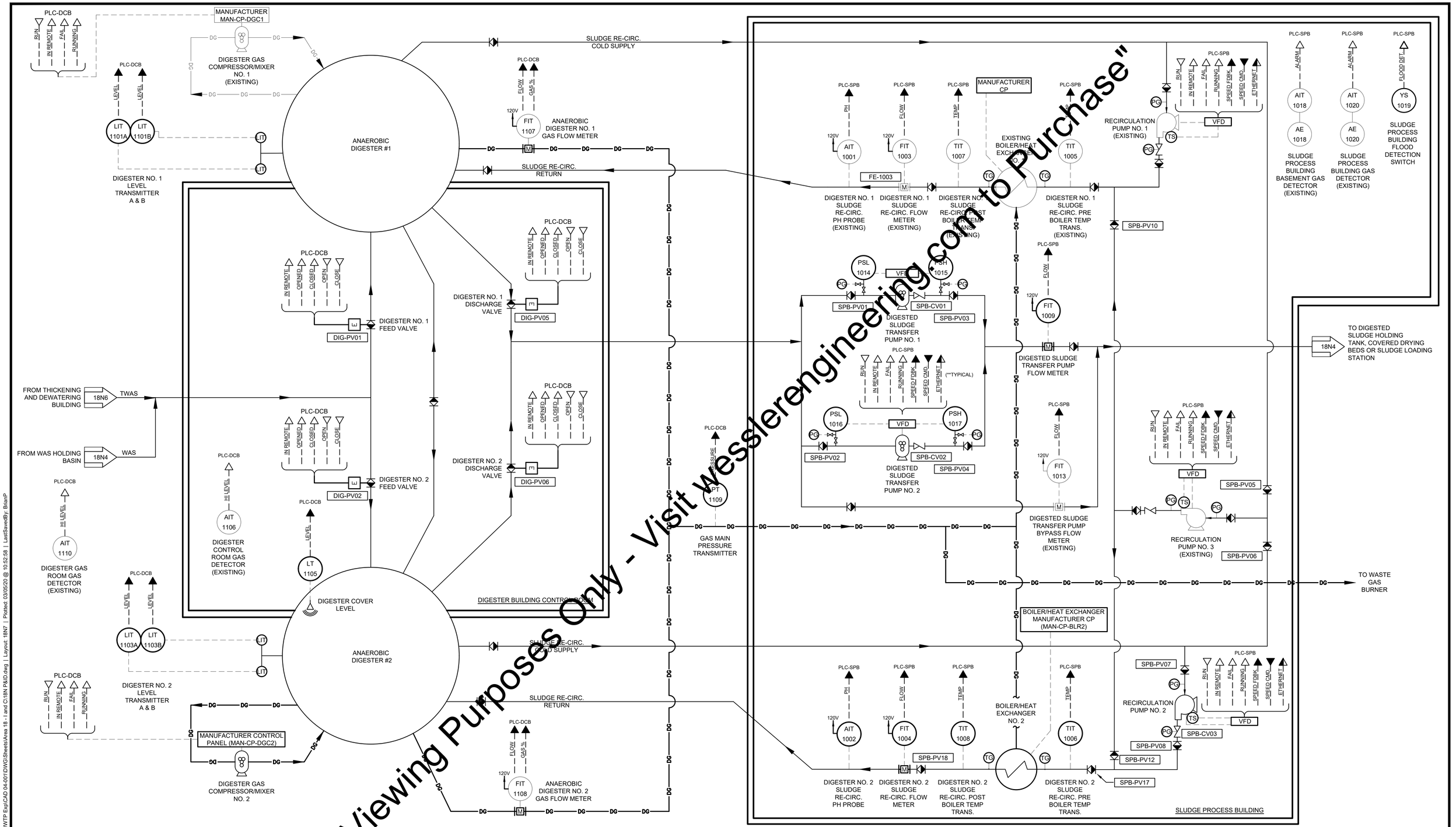

"For Viewing Purposes Only - Visit wesslerengineering.com to Purchase"

SCALE VERIFICATION	DRAWN BY	EAS
BAR IS ONE INCH LONG ON ORIGINAL DRAWING	CHECKED BY	DRI
	APPROVED BY	WCM
	ISSUE DATE	MARCH 2020
	PROJECT NUMBER	193216-04-001

NO.	DATE	INITIALS	REVISION DESCRIPTIONS

WAYNE C. MOORE REGISTERED No. 10707476 STATE OF INDIANA PROFESSIONAL ENGINEER 03/04/2020

WESSLER ENGINEERING
More than a Project™

WASTEWATER SYSTEM EXPANSION

CITY OF FRANKFORT, INDIANA
CONTRACT A - WASTEWATER TREATMENT PLANT

PIPING AND INSTRUMENTATION DRAWING
DIGESTERS AND SLUDGE PROCESS

SHEET NO.
18N7

PAGE NO.
226

Drawing: J:\Frankfort\Projects\193216 Frankfort WWTP Exp\CAD 04-001\DWG\Sheets\Area 18 - I and C\18N P&ID.dwg | Layout: 18N7 | Plotted: 03/05/20 @ 10:52:58 | LastSavedBy: BrianP

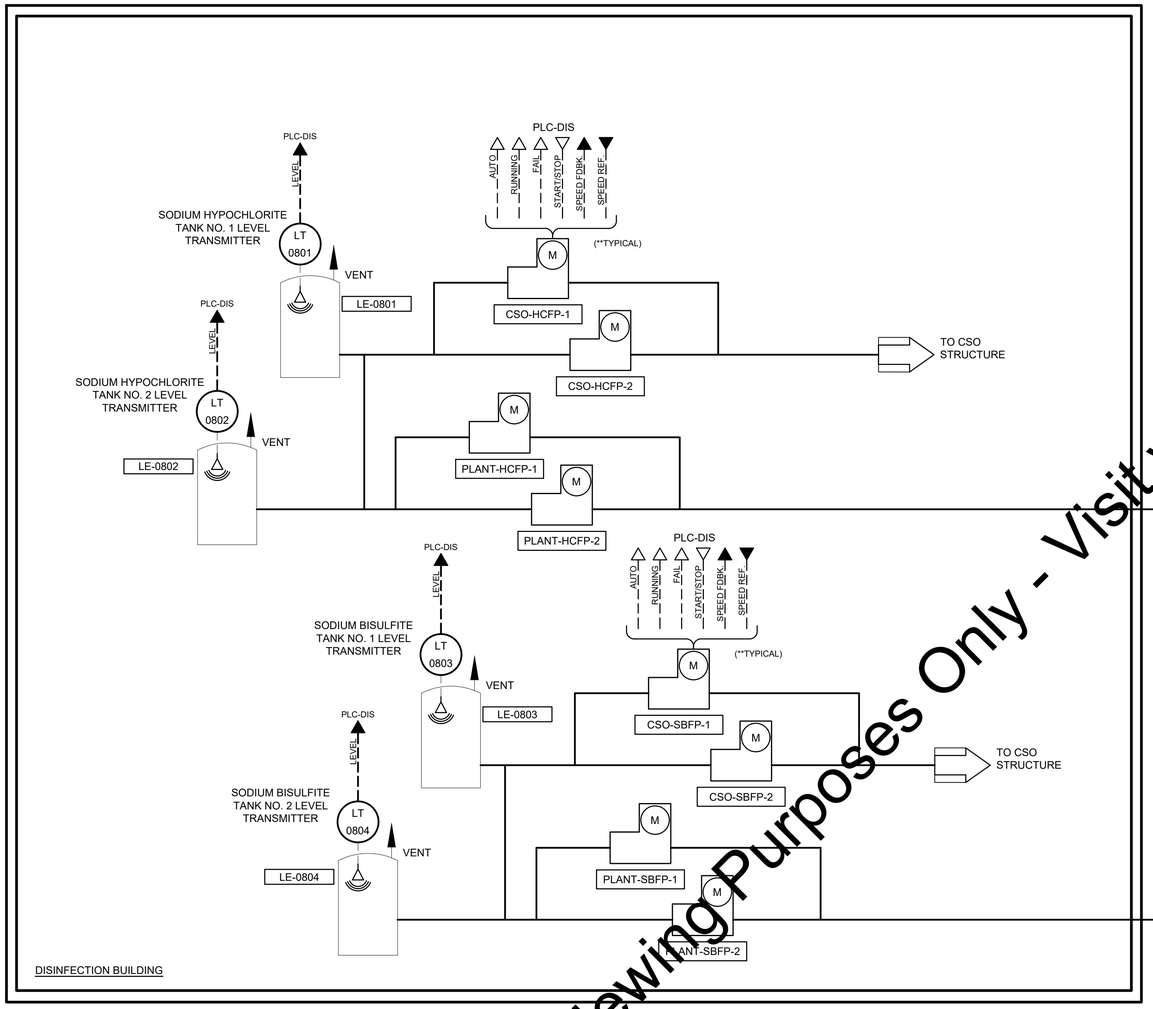

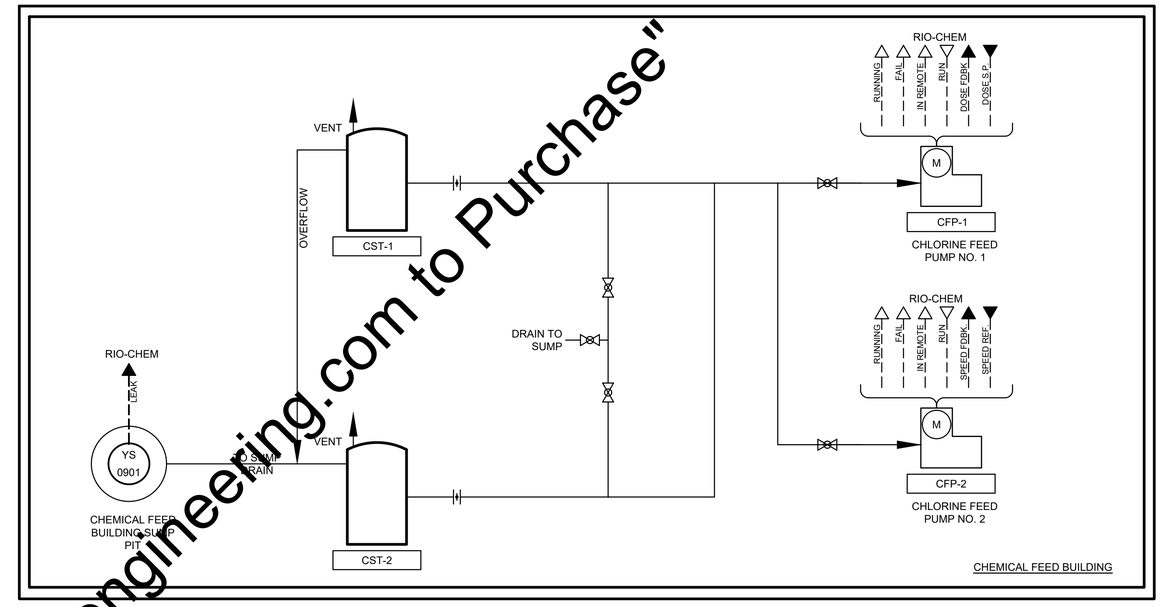

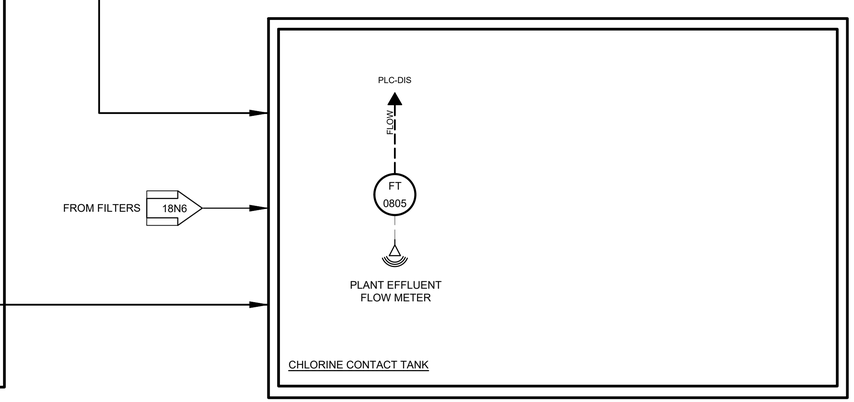

"For Viewing Purposes Only - Visit wesslerengineering.com to Purchase"

SCALE VERIFICATION	DRAWN BY	EAS
BAR IS ONE INCH LONG ON ORIGINAL DRAWING	CHECKED BY	DRT
	APPROVED BY	WCM
	ISSUE DATE	MARCH 2020
	PROJECT NUMBER	193216-04-001

NO.	DATE	INITIALS	REVISION DESCRIPTIONS

WAYNE C. MOORE REGISTERED No. 10707476 STATE OF INDIANA PROFESSIONAL ENGINEER 03/04/2020

WESSLER ENGINEERING
More than a Project™

WASTEWATER SYSTEM EXPANSION
CITY OF FRANKFORT, INDIANA
CONTRACT A - WASTEWATER TREATMENT PLANT

PIPING AND INSTRUMENTATION DRAWING
CHLORINE CONTACT TANK

SHEET NO. **18N8**

PAGE NO. 227

Drawing: J:\FrankfortProjects\193216 Frankfort WWTP Exp\CAD 04-0010WG\Sheets\Area 18 - I and C\18N P&ID.dwg | Layout: 18N8 | Plotted: 03/05/20 @ 10:52:59 | LastSavedBy: BrianP

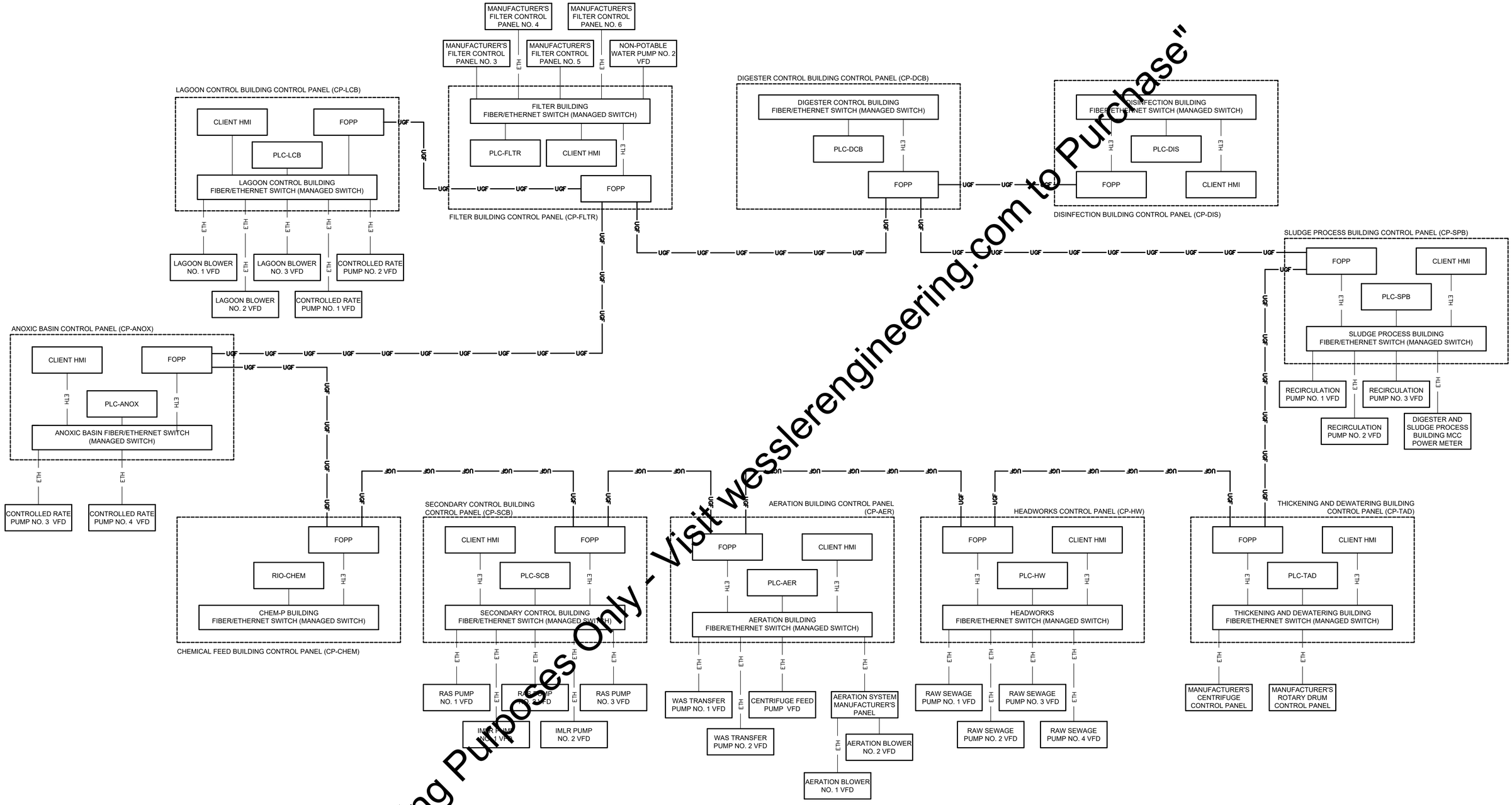

"For Viewing Purposes Only - Visit wesslerengineering.com to Purchase"

SCALE VERIFICATION	DRAWN BY	EAS
BAR IS ONE INCH LONG ON ORIGINAL DRAWING	CHECKED BY	DRI
	APPROVED BY	WCM
	ISSUE DATE	MARCH 2020
	PROJECT NUMBER	193216-04-001

NO.	DATE	INITIALS	REVISION DESCRIPTIONS

WAYNE C. MOORE REGISTERED No. 10707476 STATE OF INDIANA PROFESSIONAL ENGINEER 03MAR2020

WESSLER ENGINEERING
More than a Project™

WASTEWATER SYSTEM EXPANSION

CITY OF FRANKFORT, INDIANA
CONTRACT A - WASTEWATER TREATMENT PLANT

PIPING AND INSTRUMENTATION DRAWING
NETWORK DIAGRAM

SHEET NO.
18N9

PAGE NO.
228

Drawing: J:\Frankfort\Projects\193216 Frankfort WWTP Exp\CAD 04-001\DWGS\Sheets\Area 18 - I and C\18N P&ID.dwg | Layout: 18N9 | Plotted: 03/05/20 @ 10:53:00 | LastSavedBy: BrianP